CONFIDENTIAL.

For Departmental use and for the use of members only.

IERIAL COUNCIL OF AGRICULTURAL RESEARCH

Proceedings of the Twentieth Meeting of the Advisory Board

Held at New Delhi on the 29th November and 4th and 5th December 1939.

VOLUME II

(Appendices)

Printed by the Manager, Government of India Press, Simla.
1940.

APPENDICES.

Notes by the Secretary, Imperial Council of Agricultural Research, on the items of the Agenda.

APPENDIX I.

Note on Subject No. 1 :—Decisions of the Governing Body on the Recommendations of the Advisory Board.

The attached list (Annexure) of the decisions recorded by the Governing Body on the recommendations made by the Advisory Board at its meetings held in November 1938 and May 1939 is circulated for the information of the members.

ANNEXURE.

Decisions of the Governing Body on the Recommendations of the Advisory Board.

A.—GENERAL RECOMMENDATIONS.

1. Reconstitution of Standing Committees appointed by the Governing Body of the Imperial Council of Agricultural Research.

The recommendations of the Advisory Board in regard to the reconstitution of the Sugar, Rice, Fodder and Grazing, Locust, Animal Nutrition, Cattle Breeding and Dairying Committees were *accepted* and a few additions were made in the personnel of some of the Committees.

2. Report on the prospects of Cinchona cultivation.

The recommendation of the Advisory Board that one of the workers already dealing with cinchona cultivation in India should be asked to draw up a suitable programme of work for 5 years in the first instance was *approved,* subject to the remark that two schemes should be drawn up, one for North India and one for the South, for the consideration of the Council.

3. Report on an enquiry into the cultivation of cloves in India.

The recommendation of the Advisory Board for conducting a set of co-operative clove planting experiments in Madras, Travancore, Mysore and Coorg was *approved,* in principle.

4. Holding of an all-India Sugar Conference to consider measures for the rationalisation of the Sugar Industry.

Recommendation *approved.*

5. Establishment of an all-India Sugar Committee on the lines of the Indian Central Cotton Committee.

Recommendation approved in principle.

The question as to how it should be constituted and financed and what exactly its function should be will be examined by a special Committee and the scheme formulated by them will be put up to the Governing Body for approval at a special meeting.

6. Recommendation that a few fully equipped first class stations should be established to concentrate fundamental and comprehensive research on sugar-cane and that other stations should be utilised for varietal trials only.

Approved.

7. Recommendation that a further note should be prepared by Mr. P. V. Isaac containing all available information on the biological control of sugarcane pests all over India.

Approved.

8. *Recommendation of the Advisory Board for undertaking*—

(*i*) Legislation for controlling the quality of exports of unmanufactured tobacco.

(*ii*) Legislation for the licensing of barns and for the adoption of other measures of control on the lines of the Mysore Cigarette Tobacco safeguarding Act in new areas where the cultivation of virginia tobacco may be introduced.

(*iii*) Legislation for the establishment of regulated markets and open auction floors for the sale of graded tobacco.

The following resolutions were passed by the Governing Body on the recommendations of the Advisory Board :—

(*i*) The Governing Body recommends to the Central Government that it should enact legislation at an early date for the grading of all exports of unmanufactured tobacco and controlling the quality of such exports ;

(*ii*) The Governing Body recommends to Provincial and State Governments that they should enact legislation for the licensing of barns and for the adoption of other measures of control in new areas where the cultivation of Virginia Tobacco may be introduced ;

(*iii*) The Governing Body recommends to the Provincial and State Governments that they should enact legislation for the establishment of regular markets for the sale of graded tobacco, if this has not been done already.

9. Control of rusts of wheat in India.

The Governing Body *approved* that—

(*i*) The Government of Madras may be requested to suspend the April-June Wheat Crop in the Nilgris and Palni Hills, experimentally to see, in a limited area, the results of the methods advocated by Dr. K. C. Mehta for the control of wheat rusts in India and to put up a concrete scheme for the purposes ; and

(*ii*) Experiments be conducted in Kulu Valley in order to test the effect of clean-up of all out-of-season wheat plants.

10. Recommendations of the Crops and Soils Wing of the Board of Agriculture and Animal Husbandry.

The recommendations of the Advisory Board for carrying out a soil survey and preparing a soil-map of India were *approved of in principle*. It was decided that a suitable scheme should be put up to implement them in consultation with the Provinces and States Governments.

11. Setting up a Standing Committee for Crop-planning.

The recommendation of the Advisory Board was approved.

12. Publication of progress reports of current schemes.

The recommendations of the Advisory Board that the Directors of Agriculture might be authorised to utilise the material in progress report of the Council's schemes and that copies of the progress reports should be sent to technical workers and factories after they had been passed by the Advisory Board making it clear that the results of the experiments were still incomplete. that abstracts should be published from time to time and that the final reports should be saleable publications were *approved*.

13. Model Projects.

The recommendation that, with a view to translate the results of research into practice, Provinces and States should be requested to put up schemes of model projects on cultivators' holdings in homogenous agricultural tracts was *accepted*.

14. Extension of Fruit Research Schemes—General principles.

The Governing Body *accepted* the recommendation that after the first period of 5 years, one-third of the recurring expenditure during the next five years should be borne by the Provincial Government and two-thirds by the Council and the half and half basis of sharing expenditure should be applied in case of further extension after the second period of five years and that non-recurring expenditure involved in extensions should be borne by Provincial *Governments*.

B.—RESEARCH SCHEMES.

No.	From whom received.	Nature of scheme.	Period in years.	Amount asked for.	Recommendation of the Advisory Board. Grant by the Imperial Council of Agricultural Research.	Recommendation of the Advisory Board. Period in years.	Recommendation of the Advisory Board. Remarks.	Decision of the Governing Body. Grant by the Imperial Council of Agricultural Research. (Sanctioned).	Decision of the Governing Body. Period.	Decision of the Governing Body. Remarks.
1	2	3	4	5	6	7	8	9	10	11
				Rs.	Rs.			Rs.	Yrs. Mths.	
	A.—SUGAR SCHEMES.	NEW SCHEMES.								
1	United Provinces ..	Survey of yield and Gur: Cane ratio.	3	50,000	50,000	3	..	50,000	3 0	Subject to amount being available from special grant.
2	Bihar	Statistical Assistant at the Sugarcane Research Station, Pusa.	2/3	1,450	1,450	2/3	..	1,470	Upto 17th Mar. 40.	Do.
3	Bihar	Deputation of Mr. L. K. Khanna to Rothamsted.	2	8,000	8,000	2	..	8,000	2 0	Study leave.
4	Imperial Institute of Sugar Technology.	Manufacture of Sugar Candy.	3	18,560	18,560	3	..	18,560	3 0	Subject to amount being available from special grant.
	B.—AGRICULTURAL SCHEMES.									

5	Baroda	Paddy Research ..	5	23,125	23,125	5	..	13,800	3	0	
6	Travancore ..	Improvement of Paddy	5	25,920	25,920	5	..	15,600	3	0	
7	Central Provinces ..	Breeding wheat suited to black soil area.	5	49,370	49,370	5	..	15,000	3	0	Balance to be met by Cenral Provinces Government.
8	Baroda	Pasture Lands ..	5	1,93,088	59,699	5	Total cost revised to 1,21,486.	..		..	Consideration of Scheme postponed.
9	Travancore	Rice swarming caterpillar pest.	3	6,456	..	..	Not recommended	..		..	Scheme not approved.
10	Indian Institute of Science, Bangalore.	Chemical oxidisers and fertilisers.	3	18,840	..	..	Do. ..	..		..	Do.
11	Bihar	Nutrition content of soils.	3	13,708	..	..	Do. ..	..		..	Do.
12	Sind	Sub-surface investigation, Lloyd Barrage.	5	53,600	26,800	5	..	25,200	3	0	
13	Bhopal	Pedological study of black cotton soils.	5	39,940	19,970	5	..	12,000	3	0	
14	Sind	Alternate crops of cotton and wheat.	5	56,614	..	..	Not recommended	..		..	Scheme not approved.
15	Punjab	Cereal Technologist for wheat research work.	5	32,760	16,380	5	..	..		..	Consideration of scheme postponed.
16	Madras	Research work on potatoes.	5	13,760	13,750	5	..	..		..	Do.
17	Punjab	Alkaloid contents in medicinal plants.	4	21,924	..	..	Not recommended	..			Scheme not approved.
18	Madras	Tapping underground water.	..	9,110	..	..	Not recommended	..		..	Scheme not approved.
19	Imperial Agricultural Research Institute.	Development of certain lines of research.	5	2,50,000	2,50,000	5	..	2,50,000	5	0	Rs. 50,000 allotted for work in 1940-41.
20	Professor Mahalanobis	Preparation of tables	..	2,000	2,000	..	..	2,000		..	

B.—RESEARCH SCHEMES—*contd.*

No.	From whom received.	Nature of scheme.	Period in years.	Amount asked for.	Recommendation of the Advisory Board. Grant by the Imperial Council of Agricultural Research.	Period in years.	Remarks.	Decision of the Governing Body. Grant by the Imperial Council of Agricultural Research. (Sanctioned.)	Period.	Remarks.
1	2	3	4	5	6	7	8	9	10	11
				Rs.	Rs.			Rs.	Yrs. Mths.	
	C.—ANIMAL HUSBANDARY SCHEMES.									
21	North-West Frontier Province.	Poultry diseases ..	5	12,172	10,600	5	Total cost revised to Rs. 21,200.	6,300	3 0	
22	Bombay	Poultry diseases ..	5	30,028	16,600	5	Do. ..	6,300	3 0	
23	Orissa	Poultry diseases ..	5	8,700	10,600	5	Do. ..	..	..	Not approved.
24	United Provinces ..	Poultry diseases ..	..	9,620	10,600	5	Do. ..	6,300	3 0	
25	Madras	Poultry diseases ..	3	6,300	10,600	5	Do. ..	6,300	3 0	
26	Bihar	Poultry diseases ..	5	9,330	10,600	5	Do. ..	6,300	3 0	
27	Several Provinces ..	Bee-keeping Schemes—								
		(a) Expert and a Central Station.	..	..	62,000	5	Schemes—as revised by the Advisory Board.	..	..	Consideration postponed.
		(b) Wynaad Station	..	..	12,000	5				
28	Kashmir	Sheep breeding .	6	36,000	23,120	6		11,700	3 0	Do.

29	Punjab	Herd Books of the Hariana Breed.	5	34,045	13,482	3	..	13,422	3	0	
30	Imperial Veterinary Research Institute.	Life history of helminth parasites.	5	34,500	41,700	5	..	..	..		Consideration postponed.
31	Dr. Moghe (Nagpur) ..	Helminthological research.	1	2,900	5,600	2	..	5,600	2	0	
32	Imperial Veterinary Research Institute.	Cattle feed from molasses.	5	56,065	54,965	5	..	..	..		Approved administratively.
33	Madras	Diseases caused by Anaerobes.	5	94,632	94,632	5	..	..	..		Consideration postponed.
34	Orissa	Chilka Lake Fishery ..	2	41,850	41,850	2	This is half the estimated cost of the scheme. The other half will be met by the province.	21,000	1	0	Scheme approved administratively for 2 years at Rs. 41,850.
35	Imperial Council of Agricultural Research.	Survey of helminth infection (3 centres).	..	24,400	18,300	2	Total cost revised to Rs. 18,300.	18,300	2	0	
36	Do. ..	Grey breeds of cattle	4	34,000	29,400	3	Total cost revised to Rs. 29,400.	..	..		Consideration postponed.
	D.—Miscellaneous.										
37	Indian Society of Soil Science.	Grant-in-Aid ..	5	3,750	3,750	5	..	3,750	5	0	
38	Indian Council of Agricultural Research.	Critical Monograph on Dry Farming.	1	5,700	5,700	1	..	5,700	1	0	
39	Indian Statistical Institute.	Professor Hetelling's visit to India.	..	3,000	..	..	Not recommended	..	..		Scheme not approved.
40	Imperial Council of Agricultural Research	Affiliation of the Imperial Council of Agricultural Research with International Dairy Federation.	5	500	500	..	..	500	..		

B.—RESEARCH SCHEMES—*contd.*

No.	From whom received.	Nature of scheme.	Period in years.	Amount asked for.	Recommendation of the Advisory Board: Grant by the Imperial Council of Agricultural Research.	Recommendation of the Advisory Board: Period in years.	Recommendation of the Advisory Board: Remarks.	Decision of the Governing Body: Grant by the Imperial Council of Agricultural Research. (Sanctioned.)	Decision of the Governing Body: Period.	Decision of the Governing Body: Remarks.
1	2	3	4	5	6	7	8	9	10	11
41	Imperial Council of Agricultural Research	Publications of abstracts of selected articles from foreign journals.	5	Rs. 2,775	Rs. 2,755	5	..	Rs. 1,500	Yrs. 3 Mths. 0	
	A.—SUGAR SCHEMES.	EXISTING SCHEMES—RENEWALS AND ADDITIONS.								
42	Bombay	Sugarcane research ..	2	82,700	82,700	2	..	82,700	2 0	Subject to the amount being available from the grant for Sugar Research.
43	Madras	Morphology and Anatomy of sugarcane sorghum hybrids.	1	3,166	..	..	Not recommended	..	..	Not approved.
	B.—AGRICULTURAL SCHEMES.									
44	Dacca University ..	Lateritic and red Soils of India.	5	25,938	25,938	5	..	9,100	1 9	
45	Dacca University ..	Nutrition of the Rice Plant.	5	38,228	37,028	5	..	12,950	1 9	

46	Assam	Research in deep water paddy.	4¾	91,200	26,214	3	..	..	..		Extended upto 31st March 1940.
47	Bihar	Rice Research Scheme	2	61,496	6,225	1/6	..	3,100	0	2½	
48	Dacca University ..	Organic constituents of Indian soils.	2	2,400	2,400	2	..	2,300	1	11	
49	Indian Institute of Science, Bangalore.	Quality of crops ..	3	12,150	..	..	Not recommended	..	..		Not approved.
50	Dr. N. R. Dhar ..	Nitrogen fixation ..	3	11,310	..	..	Do. ..	..	..		Do.
51	United Provinces ..	Brewing qualities of barleys.	5	20,400	14,400	5	..	5,800	2	0	
52	Punjab	San Jose Scale survey	1	25,000	25,000	1	..	14,580	0	7	
53	Bombay	*Cold Storage scheme*	3	59,217	59,217	3	..	41,040	2	1	
54	(a) Madras ..	Dry Farming Scheme	2	58,994	56,586	3½	..	32,400	2	0	
54	(b) Bombay ..	Do. ..	3½	1,25,499	1,25,499	3½	..	71,800	2	0	
54	(c) Punjab	Do. ..	5	1,37,294	70,507	3½	..	35,350	1	9	
54	(d) Hyderabad ..	Do. ..	3½	43,869	32,397	3½	..	18,400	2	0	
55	Hyderabad ..	Castor Improvement ..	5	32,068	32,068	5	..	13,866	2	2	
56	Bihar	Fruit Research ..	3	48,867	32,578	3	..	21,600	2	0	
57	United Provinces ..	Do. ..	5	1,87,200	1,20,213	5	..	42,000	1	9	
58	Madras	Do. ..	5	85,000	53,700	5	..	18,100	2	1	
58a	Baluchistan ..	Fruit canning (additional grant).	..	..	3,000	..	Non-recurring	3,000	..		
58b	..	Termination of Central Provinces Citrus Research Scheme.	..	..	..	..	..	..	..		Decided to continue the scheme for a year more.
59	Travancore ..	Coconut palm diseases	3	35,184	23,300	2	..	23,200	2	0	Question of contribution of half the cost by the State to be considered after the expiry of two years.

B.—RESEARCH SCHEMES—*concld.*

No.	From whom received.	Nature of scheme.	Period in years.	Amount asked for.	Recommendation of the Advisory Board. Grant by the Imperial Council of Agricultural Research.	Period in years	Remarks.	Decision of the Governing Body. Grant by the Imperial Council of Agricultural Research. (Sanctioned).	Period.	Remarks.
1	2	3	4	5	6	7	8	9	10	11
				Rs.	Rs.			Rs.	Yrs. Mths	
	C.—ANIMAL HUSBANDRY SCHEMES.									
60	All Provinces and Hyderabad.	Veterinary Investigation Officers.	..	..	5,20,000	5	(Approximate cost)	1,04,000	1 0	
61	Madras	Animal Nutrition Scheme.	3	30,270	30,270	3	..	20,000	2 0	
	D.—MISCELLANEOUS.									
62	Imperial Council of Agricultural Research.	Statistical Section (Extension).	5	1,12,320	1,12,320	5	..	7,500	0 4	
63	Orissa	Marketing Staff (additional grant).	5	93,425	9,700	4	..	9,700	0 9	

NOTE.—Funds were also allotted to the following schemes which had already been approved and which have been awaiting the allocation of funds :—

	Rs.	Period.
1. Kashmir Rice Research Scheme	9,300	3 years.
2. Research on papay breeding and cultural practices	6,000	3 "
3. Training of an officer at Aberystwyth in methods of grassland improvement	8,000	2 "
4. Mysore sheep-breeding scheme	7,200	3 "
5. Bombay wool analysis scheme	15,300	3 "
6. Mysore Poultry Diseases scheme	14,700	3 "

APPENDIX II.

Note on Subject No. 2 :—Appointment of Committees.

There are a number of schemes, progress reports, etc., on the Agenda of the Advisory Board which the Vice-Chairman of the Council considers might with advantage be examined in the first instance by suitable Standing Committees of the Council or *ad hoc* Committees. A statement (Annexure I) is attached giving information as to the personnel of the various Committees, and the date, time and place of the meetings. A chart showing the time and place of meetings of the full Advisory Board and of the various Committees is also enclosed for information (Annexure II).

ANNEXURE I.

Serial No.	*Name of Committee.*	*Personnel.*	*Date and time of meeting.*
	Benares Hindu University Scheme Committee (Plant Physiology).	1. The Agricultural Commissioner with the Government of India—Chairman. 2. Mr. H. R. Stewart, I.A.S., Director of Agriculture, Punjab. 3. Dr. R. D. Rege, Sugarcane Research Station, Padegaon. 4. Dr. A. K. Mitra, Economic Botanist (sugarcane and paddy), United Provinces. 5. Dr. B. N. Singh, Head of the Institute of Agricultural Research, Hindu University, Benares. 6. Mr. Boshi Sen, Vivekananda Laboratory, Almora.	29th November 1939, 2-30 P.M.
1	Rice Committee ..	PERSONNEL OF THE STANDING RICE COMMITTEE (EXTENDED UP TO THE 30TH SEPTEMBER 1941). 1. The Vice-Chairman, Imperial Council of Agricultural Research—Chairman *ex-officio*. 2. The Agricultural Commissioner with the Government of India. 3. The Agricultural Marketing Adviser to the Government of India. 4. The Economic Adviser to the Government of India. 5. The Senior Marketing Officer (Rice). 6. The Statistician, I. C. of A. R.	27th and 28th November 1939 11 A.M.

Serial No.	Name of Committee.	Personnel.	Date and time of meeting.
1	Rice Committee—*contd.*	7—20. The Directors of Agriculture, Madras, Bombay, Bengal, United Provinces, Bihar, Central Provinces, Assam, Sind,* Hyderabad, Mysore, Travancore, Cochin and Kashmir and the Commissioner of Agriculture, Baroda.	27th and 28th November 1939 11 A.M.
		21. The Deputy Director of Agriculture, Orissa.	
		22. The Hon'ble Mr. Hossain Imam.	
		23—30. *Eight representatives of rice growers*, one each from Madras, Bombay, Bengal, United Provinces, Bihar, Central Provinces, Assam and Orissa.	
		23. *Madras.*—Sri T. S. Kuttalalingam Pillai, Landlord, Ilangi P. O. Tenkasi (S. I.), Tinnevelly District.	
		24. *Bombay.*—Mr. Govind Dharmaji Vartak, Virar, District Thana.	
		25. *Bengal.*—Khan Sahib Maulvi Syed Muhammad Afzal, M.L.A., P.O. Piroj-pur, District Bakarganj.	
		26. *United Provinces.*—Mr. Prayag Dhwaj Singh, B.A., LL.B., M.L.A., Deoria, Gorakhpur.	
		27. *Bihar.*—Babu Jamuna Prasad Singh, M.L.A., Gaya.	
		28. *Central Provinces and Berar.*—Pandit W. B. Lakhe, B.A., Malguzar of Kisla and Kusmi, Raipur.	
		29. *Assam.*—Mr. A. K. Chanda, Bar-at-Law, M.L.A., Silchar, Cachar District.	
		30. *Orissa.*—Sri Sarangdhar Das, B.A. (Calif. U. S. A.), Chandni Chowk P. O. Cuttack.	
		31. The Paddy Specialist, Madras, P. O. Lawley Road, Coimbatore.	
		32. The Crop Botanist, Bombay, Karjat, District Kolaba.	
		33. The Economic Botanist, Bengal, Dacca.	
		34. The Economic Botanist (Sugarcane and Paddy), United Provinces, Shahjahanpur.	
		35. The Rice Specialist, Bihar, Sabour.	

* The Economic Botanist, Dokri, might attend the meetings of the Committee when it was not possible for the Director of Agriculture, Sind, to be present.

Serial No.	Name of Committee.	Personnel.	Date and time of meeting.
1	Rice Committee—*concld.*	36. The Rice Botanist, Rice Research Station, Raipur (C. P.). 37. The Economic Botanist (Rice) Habiganj Paddy Farm, Assam. 38. The Paddy Specialist, Orissa, Cuttack. 39-40. Two Professors of Economics (selection)— 39. Professor P. J. Thomas, D.Phil., M.L.C., Professor of Economics, University of Madras. 40. Dr. H. L. Dey, Professor in the Department of Economics ano Politics, Dacca University. 41. A representative of the Associated Chamber of Commerce— Rai Upendra Lal Ray Bahadur, Prade Square, Chittagong. 42. A representative of the Federation of the Indian Chamber of Commerce and Industry—Mr. Ashutosh Bhattacharyya, 69-2, Chetla Road, P. O. Alipore, Calcutta. 43. One Wholesale Rice Merchant (selection)—K. P. V. S. Mohamad Meera Rowther Sahib Bahadur, Merchant and Agent, Negapatam, (S. I.). 44. One Rice Miller— Mr. B. K. Roy, 11C, Chetla Central Road, Alipur, Calcutta. 45. Additional Rice Miller. Sri Rao Sahib C. Subbiah Chetty, Rice Miller, Nellore, Madras. 46.-47. (Two Trade representatives, (one each from Madras and Bengal. 46. *Madras.*—Sri N. Rangaswami Reddiar, Merchant, Kuttalam, Tanjore District. 47. *Bengal.*—Mr. M. A. Ispahani, M.L.A., Muslim Chamber of Commerce, Calcutta. **Secretary,** Imperial Council of Agricultural Research Secretary, *ex-officio.*	27th and 28th November 1939 11 A.M.

Serial No.	Name of Committee.	Personnel.	Date and time of meeting.
2	Animal Nutrition Committee.	1. The Vice-Chairman, Imperial Council of Agricultural Research—Chairman, *ex-officio*. 2. The Animal Husbandry Commissioner with the Government of India. 3. Dr. P. E. Lander, Agricultural Chemist, Punjab, Lyallpur. 4. Dr. K. C. Sen, Officer-in-Charge, Animal Nutrition Section, Izatnagar. 5. Rao Bahadur B. Viswanath, Director, Imperial Agricultural Research Institute, New Delhi. 6. Mr. J. R. Haddow, Imperial Veterinary Research Institute, Mukteswar. 7. Mr. Zal R. Kothavalla, Imperial Dairy Expert, Bangalore. 8. The Director, Imperial Veterinary Research Institute, Mukteswar. 9. The Director of Veterinary Services, Army Headquarters, Simla. 10. The Director, Nutrition Research, Indian Research Fund Association, Coonoor. 11. The Director of Veterinary Services, Punjab, Lahore. 12. Babu Gostha Bihari Pal, Agricultural Chemist, Bengal. 13. Khan Sahib Syed Ghulam Husain, Animal Husbandry Officer, Bhopal. 14. The Director, Civil Veterinary Department and Veterinary Adviser to the Government of Bengal, Calcutta. 15. The Director of Veterinary Services, Bombay. 16. Dr. Burch H. Schneider, Allahabad Agricultural Institute, Allahabad. 17. The Director of Veterinary Services, United Provinces, Lucknow. 18. The Deputy Director of Agriculture, Bundelkhand Circle, Jhansi, United Provinces. 19. Mr. P. V. Ramiah, Agricultural Chemist, Coimbatore. 20. Rao Sahib D. V. Bal, Agricultural Chemist, Central Provinces and Berar.	29th November, 1939, 2-30 P.M. and 30th November 1939, 10-30 A.M.

Serial No.	Name of Committee.	Personnel.	Date and time of meeting.
2	Animal Nutrition Committee—*contd.*	21. Major C. E. McGuckin, Assistant Director of Military Dairy Farms, Northern Circle, Lahore Cantt.	29th November, 1939, 2-30 P.M. and 30th November 1939, 10-30 A.M.
		22. Dr. W. L. Davies, Director of Dairy Research.	
		Secy., I. C. A. R., Secy. *ex-officio*.	
3	*Dry Farming* Committee.	1. The *Vice-Chairman, Imperial Council of* Agricultural Research, Chairman.	*29th November* 1939, 4 P.M.
		2. The Agricultural Commissioner with the Government of India.	
		3 to 7. The Directors of Agriculture :—	
		Madras, Bombay, Punjab, Sind and Hyderabad.	
		8. The Chief Investigator, Dry Farming Scheme, Bombay.	
		9. Dr. P. E. Lander, Agricultural Chemist to Government, Punjab.	
		10. Dr. J. N. Mukerjee, Chemistry Department, Calcutta University.	
		11. The Agricultural Chemist, Agricultural Research Station, Sakrand (Sind).	
	Fodder and Grazing Committee.	1. The Vice-Chairman, Imperial Council of Agricultural Research.	30th November 1939, 10-30 A.M.
		2. The Agricultural Commissioner with the Government of India.	
		3. The Animal Husbandry Commissioner with the Government of India.	
		4. The Parliamentary Secretary to the Hon'ble the Minister for Agriculture and Rural Development, Madras.	
		5. The Director of Remounts, Army Headquarters (or a representative).	
		6. The Director of Farms, Army Headquarters (or a representative).	
		7. The Inspector General of Forests, Forest Research Institute, Dehra Dun.	
		*8. The Director of Dairy Research, India.	
		9. Dr. K. C. Sen, Officer-in-Charge, Animal Nutrition Section, Izatnagar.	

*Indicates visitors.

Serial No.	Name of Committee.	Personnel.	Date and time of meeting.
	Fodder and Grazing Committee—*contd.*	10. Mr. C. C. Wilson, Chief Conservator of Forests, Madras.	30th November 1939, 10-30 A.M.
		11. Mr. E. J. Bruen, Livestock Expert to the Government of Bombay.	
		12. Professor L. S. S. Kumar, College of Agriculture, Poona.	
		*13. The Senior Conservator of Forests, Bengal. (*Vice* Mr. P. J. Kerr).	
		14. Mr. E. A. Smythies, Chief Conservator of Forests, United Provinces.	
		*15. The Director of Agriculture, United Provinces. (*Vice* Conservator of Forests, United Provinces).	
		16. Dr. R. Maclagen Gorrie, District Forest Officer, Siwaliks Division, Punjab.	
		17. Mr. W. S. Read, Superintendent, Government Cattle Farm, Hissar.	
		*18. The Director of Agriculture, Bihar.	
		*19. The Conservator of Forests, Bihar.	
		*20. Lt.-Col. C. A. Maclean, Deputy Director of Agriculture, Bihar.	
		21. Mr. E. A. H. Chirchill, Deputy Director of Agriculture, Central Provinces and Berar.	
		*22. The Agricultural Officer, North West Frontier Province.	
		*23. The Director of Agriculture, Sind or the Conservator of Forests, Sind.	
		*24. The Deputy Director of Agriculture, Orissa.	
		*25. Mr. Fuzlul Haq, Deputy Director of Agriculture, Assam.	
		*26. The Commissioner of Agriculture, Baroda.	
		*27. The Director of Agriculture, Bhopal.	
		*28. Sardar Bahadur Sir Datar Singh.	
		29. Mr. S. H. Howard, Conservator of Forests, (United Provinces).	
		*30. Dr. N. D. Kehr.	
		31. Mr. P. J. Kerr.	
		*32. The Revenue Secretary, Bhopal Government.	

*Indicates visitors.

Serial No.	Name of Committee.	Personnel.	Date and time of meeting.
	Jowar Committee.	1. The Agricultural Commissioner with the Government of India (*Chairman*).	30th November 1939, 2-30 P.M.
		2. The Director of Agriculture or the Deputy Director of Agriculture, Madras.	
		3. The Director of Agriculture, Bombay.	
		4. The Director of Agriculture or the Deputy Director of Agriculture, Hyderabad.	
		5. The Millet Specialist, Madras.	
		6. The Cerealist, Punjab.	
		7. The Economic Botanist, Bombay.	
		8. The Economic Botanist, Hyderabad.	
		9. The Economic Botanist, Central Provinces and Berar.	
		10. A Deputy Director of Agriculture from the United Provinces.	
		11. The Millets and Oilseeds Botanist, United Provinces.	
		12. The Director of Agriculture, Sind.	
		13. The Director of Agriculture, Mysore.	
		14. The Commissioner of Agriculture, Baroda.	
		15. The Fodder Specialist to the Government of the Punjab. (Visitor).	
	Dairying Committee.	1. The Vice-Chairman, Imperial Council of Agricultural Research, Chairman, *ex-officio*.	30th November 1939, 2-30 p.m.
		2. The Animal Husbandry Commissioner with the Government of India.	
		3. The Imperial Dairy Expert, Bangalore.	
		4. The Director of Military Farms (or Representative), Army Headquarters, Simla.	
		5. Mr. W. Keventer, Messrs. Keventer and Co., Aligarh.	
		6. Mr. R. C. Woodford, Deputy Director of Agriculure (Livestock), Assam, Shillong.	
		7. Mr. E. J. Bruen, Livestock Expert, Bombay.	
		8. The Livestock Development Officer, Madras, Hosur.	

Serial No.	Name of Committee.	Personnel.	Date and time of meeting.
	Dairying Committee—*contd.*	9. The Director, Imperial Veterinary Research Institute, Mukteswar.	30th November 1939, 2-30 P.M.
		10. Mr. A. C. Aggarwala, Professor of Animal Husbandry, Veterinary College, Lahore.	
		11. Mr. J. V. Takle, Extra Assistant Director, Animal Husbandry, Central Provinces and Berar, Nagpur.	
		12. Mr. W. Sayer, Imperial Agricultural Research Institute, New Delhi.	
		13. Sardar Bahadur Sir Datar Singh, Montgomery Dairy Farm, Montgomery.	
		14. Mr. F. J. Gossip, Livestock Expert, Bengal, Dacca.	
		15. Dr. Burch H. Schneider, Allahabad, Agricultural Institute, Allahabad.	
		16. Mr. D. N. Khurody, Senior Marketing Officer.	
		17. The Deputy Director of Agriculture, Bundelkhand Circle, Jhansi, United Provinces.	
		18. The Director of Veterinary Services, Bihar, Patna.	
		19. The Director of Veterinary Services, Bombay.	
		20. Dr. W. L. Davies, Director of Dairy Research.	
		21. Mr. Mohd. Azhar Ali, 131, Khialigunj, Lucknow.	
		Secretary, I. C. A. R., Secretary *ex-officio*.	
	Soil Science Committee.	1. The Vice-Chairman, Imperial Council of Agricultural Research, Chairman—*ex-officio*.	1st December 1939, 10-30 A.M.
		2. The Agricultural Commissioner with the Government of India.	
		3. The Agricultural Chemist, United Provinces.	
		4. The Agricultural Chemist, Punjab.	
		5. The Agricultural Chemist, Bihar.	
		6. The Agricultural Chemist, Central Provinces.	
		7. The Agricultural Chemist, Sind.	
		8. The Deputy Director of Agriculture, Orissa.	
		9. Lieutenant-Colonel C. A. MacLean, I. A. S., Deputy Director of Agriculture, Bihar.	

Serial No.	Name of Committee.	Personnel.	Date and time of meeting.
	Soil Science Committee—*contd.*	10. Rao Bahadur B. Viswanath, F. I. C., Officiating Director, Imperial Agricultural Research Institute, New Delhi (*Soil Chemist*).	1st December 1939, 10-30 A.M.
		11. Dr. J. K. Basu, Soil Physicist, Sugarcane Research Scheme, Bombay-Deccan (*Soil Physicist*).	
		12 Dr. P. G. Krishna, Agricultural Chemist to the Government of Hyderabad (*Soil Physicist*).	
		13. Dr. E. MacKenzie Taylor, M. B. E., Director, Irrigation Research, Punjab (*Soil Physicist*).	
		14. Dr. J. C. Ghosh, D.Sc., Director, Indian Institute of Science, Bangalore (*Physical Chemist*).	
		15. Dr. J. N. Mukherjee, D.Sc., Kaira Professor of Chemistry, Calcutta University.	
		16. Mr. P. H. Carpenter, Chief Scientific Officer, *Indian Tea Association, Assam*	
		17. Dr. Nazir Ahmad, Director, Technological Laboratory, Indian Central Cotton Committee, Bombay.	
		18. Dr. J. K. Dubey, Director of Agriculture and State Chemist, Government of Bhopal.	
		19. Mr. R. G. Allan, Commissioner of Agriculture, Baroda.	
		20. Dr. Sri Krishna, Bio-Chemist, Forest Research Institute and College, Dehra Dun.	
		The Secretary, Imperial Council of Agricultural Research, Secretary—*ex-officio*.	
	Animal Breeding Committee.	1. The Vice-Chairman, Imperial Council of Agricultural Research—Chairman, *ex-officio*.	1st December 1939, 10-30 A.M. and 2-30 P.M.
		2. The Animal Husbandry Commissioner with the Government of India.	
		3. The Joint Director, Imperial Agricultural Research Institute.	
		4. The Director, Imperial Veterinary Research Institute.	
		5. The Livestock Expert, Bombay.	
		6. The Director of Veterinary Services, Punjab.	

Serial No.	Name of Committee.	Personnel.	Date and time of meeting.
	Animal Breeding Committee—*contd.*	7. The Superintendent, Government Cattle Farm, Hissar.	1st December 1939, 10-30 A.M. and 2-30 P.M.—*contd.*
		8. The Director of Veterinary Services, United Provinces.	
		9. The Director of Agriculture, Bihar.	
		10. The Superintendent, Civil Veterinary Department, Kashmir.	
		11. The Poultry Research Officer, Imperial Veterinary Research Institute, Izatnagar.	
		12. Sardar Bahadur Sir Datar Singh.	
		13. Imperial Dairy Expert, Bangalore.	
		14. The Director of Dairy Research.	
		15. Professor James N. Warner, Allahabad Agricultural Institute.	
		16. The Deputy Director of Agriculture, Cattle Breeding, Bundelkhand Circle, Jhansi.	
		18. Professor H. K. Mookerjee, Head of the Department of Zoology, Calcutta University.	
		19. The Agricultural Marketing Adviser to the Government of India.	
		19. The Superintendent, Civil Veterinary Department, Mysore.	
		The Secretary, Imperial Council of Agricultural Research—Secretary, *ex-officio*.	
	Botanical and Physiological Committee.	*Botanical and Physiological Committee.*	**1st December 1939, 2-30 P. M.**
		1. The Vice-Chairman, Imperial Council of Agricultural Research, Chairman.	
		2. The Agricultural Commissioner with the Government of India.	
		3. Dr. B. P. Pal, Imperial Economic Botanist, Imperial Agricultural Research Institute.	
		4. Dr. G. W. Padwick, Imperial Mycologist, Imperial Agricultural Research Institute.	
		5—8. The Directors of Agriculture—	
		Punjab, Madras, Sind and United Provinces (Mr. Vishnu Sahay).	
		9. Mr. T. S. Sabnis, Economic Botanist (Oilseeds), United Provinces.	

Serial No.	Name of Committee.	Personnel.	Date and time of meeting.
	Botanical and Physiological Committee—*contd.*	10. Khan Sahib Chaudhri Ali Mohammad, Oil-seeds Specialist, Lyallpur.	1st December 1939, 2-30 P.M.
		11. A. B. H. Khoorshid, Economic Botanist, Hyderabad.	
		12. Professor B. Sahni, The University, Lucknow.	
		13. Dr. V. K. Badami, Deputy Director of Agriculture, Orissa.	
		14. Mr. K. Ramiah, Geneticist, Institute of Plant Industry, Indore.	
		15. Mr. A. M. Thompson, Senior Marketing Officer.	
		16. Mr. H. C. Javaraya, Senior Marketing Officer.	
		17. Dr. Hidayetullah, Economic Botanist, Bengal.	
		18. Mr. J. C. Ramchandani, Botanist, Sind.	
		19. Professor P. C. Mahalanohis, Statistical Laboratory, Presidency College, Calcutta.	
		20. Mr. J. H. Sprott, Cooverelly Estate, Mangles Brothers, Coorg.	
		21. Dr. P. K. Sen, Fruit Physiologist to the Government of Bombay.	
		22. Dr. B. N. Uppal, Plant Pathologist to the Government of Bombay.	
		23. Dr. J. F. Dastur, Mycologist, Nagpur.	
		24. Ch. Ram Dhan Singh, Cerealist, Lyallpur.	
		25. Dr. K. C. Mehta, Agra College, Agra.	
		26. Dr. H. K. Nandi, Economic Botanist, Jorhat, Assam.	
		27. Dr. B. N. Singh.	
		28. Mr. Bosi Sen.	
		29. Mr. S. C. Sen, Superintendent, Cinchona Cultivation in Bengal, Mungpoo.	
		Secretary, Imperial Council of Agricultural Research, Secretary, *ex-officio*.	
	Fruit Committee.	*Fruit Research Committee.*	2nd December 1939, 10-30 A. M.
		1. The Vice-Chairman, Imperial Council of Agricultural Research, Chairman.	
		2. The Agricultural Commissioner with the Government of India.	

Serial No.	Name of Committee.	Personnel.	Date and time of meeting.
	Fruit Committee —*contd.*	3. Rao Bahadur B. Viswanath. 4—11. The Directors of Agriculture— Madras, Bombay, Bengal, United Provinces Punjab, Bihar, Central Provinces and Kashmir. 12. The Commissioner of Agriculture, Baroda. 13. Mr. H. C. Javaraya, Senior Marketing Officer (Fruit). 14. The Agricultural Officer, North-West Frontier Province. 15. The Agricultural Officer, Baluchistan. 16. Mr. G. T. Tait. 17. The Imperial Entomologist. 18. The Imperial Mycologist. 19. Sardar Sahib Lal Singh, Fruit Specialist, Punjab. 20. Dr. G. S. Cheema, Horticulturist to Government, Bombay. 21. Dr. P. K. Sen. 22. The Horticulturist, Sind. 23. Dr. Hedayatullah, Economic Botanist, Bengal. 24. Diwan Bahadur T. Raghaviah. 25. Mr. P. H. Carpenter. 26. Mr. J. H. Sprott (Coorg) 27. Dr. J. F. Dastur, Mycologist (Central Provinces), Nagpur. 28. Dr. B. N. Uppal, Plant Pathologist to Government, Bombay. 29. Professor S. P. Agharkar, Botany Department, Calcutta University. 30. Mr. Zarbakt Khan, Horticulturist, North-West Frontier Province, Peshawar. *Secretary, Imperial Council of Agricultural Research, Secretary, ex-officio.*	2nd December 1939, 10-30 A.M.

44780
1940

Serial No.	Name of Committee.	Personnel.	Date and time of meeting.
	Entomological and Pathological Committee.	*Entomological and Pathological Committee.* 1. The Vice-Chairman, Imperial Council of Agricultural Research, Chairman. 2. The Agricultural Commissioner with the Government of India. 3. The Director, Imperial Agricultural Research, Institute. 4. Colonel E. Cotter. I. M. S., Public Health Commissioner with the Government of India. 5. The Director of Agriculture, United Provinces. 6. The Entomologist to Government, Punjab. 7. Mr. A. M. Mustafa, Agricultural Officer, Baluchistan. 8. The *Imperial Entomologist, Imperial Agri*cultural Research Institute. 9. The Imperial Mycologist, Imperial Agricultural Research Institute. 10. The Director of Agriculture, Kashmir. 11. Sardar Sahib Lal Singh, Fruit Specialist, Lyallpur. 12. Mr. K. R. Narayana Iyer, Director of Agriculture, Travancore. 13. Dr. Hidayatullah, Economic Botanist, Bengal. 14. Dr. A. K. Mitra, Economic Botanist, United Provinces. 15. Khan Bahadur M. Afzal Husain. 16. Professor P. C. Mahalanobis. 17. Dr. J. C. H. Templor, Entomologist. 18. Dr. J. F. Dastur, Mycologist, Nagpur. 19. Dr. B. N. Uppal, Plant Pathologist to Government, Bombay. 20. Mr. P. V. Isaac, Second Imperial Entomologist, I. A. R. I. 21. Dr. J. A. Muliyil, Biological Control Officer, I. A. R. I. Secretary, Imperial Council of Agricultural Research Secretary, *ex officio.*	2nd December 1939, 2-30 P.M.

Serial No.	Name of Committee.	Personnel.	Date and time of meeting.
	Animal Pests and Diseases Committee.	1. The Vice-Chairman, Imperial Council of Agricultural Research, Chairman, *ex-officio*.	2nd December 1939, 10-30 A.M. and 2-30 P.M.
		2. The Animal Husbandry Commissioner with the Government of India.	
		3. The Director, Imperial Veterinary Research Institute, Mukteswar.	
		4. The Director of Veterinary Services, Madras.	
		5. The Director of Veterinary Services, Bombay.	
		6. The Director, Civil Veterinary Department and Veterinary Adviser to the Government of Bengal, Calcutta.	
		7. The Director of Veterinary Services, United Provinces.	
		8. The Director of Veterinary Services, Punjab.	
		9. The Director of Veterinary Services, Bihar.	
		10. The Deputy Director of Veterinary Services, Central Provinces and Berar.	
		11. The Director, Civil Veterinary Department, Assam.	
		12. The Superintendent, Civil Veterinary Department, North-West Frontier Province.	
		13. The Director of Veterinary Services, Sind.	
		14. The Deputy Director of Veterinary Science and Animal Husbandry, Baroda.	
		15. The Senior Veterinary Inspector, Cochin.	
		16. The Superintendent, Civil Veterinary Department, Kashmir.	
		17. The Director of Veterinary Services in India, Army Headquarters, Simla.	
		18. The Superintendent, Civil Veterinary Department, Mysore.	
		19. The Director, Civil Veterinary Department, Hyderabad.	
		20. Mr. S. K. Sen, Entomologist, Imperial Veterinary Research Institute, Mukteswar.	
		The Secretary, Imperial Council of Agricultural Research—Secretary, *ex-officio*.	

Serial No.	Name of Committee.	Personnel.	Date and time of meeting.
	Cardamoms Committee.	The Agricultural Commissioner with the Government of India (Chairman). The Directors of Agriculture, Madras, Mysore and Travancore. Mr. J. H. Sprott. The Director, Imperial Agricultural Research Institute, New Delhi. Dr. B. N. Uppal, Plant Pathologist to the Government of Bombay. The Imperial Entomologist, Imperial Agricultural Research Institute. Mr. P. H. Carpenter, Director, Scientific Department, Indian Tea Association, Tocklai.	2nd December 1939, 4 P.M.

ANNEXURE II.

Chart showing the time and place of meetings of the full Advisory Board and of the Committees.

November-December, 1939.	Day.	Meeting (forenoon).	Time.	Meeting (afternoon).	Time.
27th and 28th November	Monday .. Tuesday ..	Rice Committee	11 A. M. ..	Rice Committee	2-30 P. M.
29th November	Wednesday	Full Board	11 A. M.	Benares Hindu University Scheme Committee.	2-30 P. M.
				Animal Nutrition Committee	2-30 P. M.
				Dry Farming Committee	4 P. M.
30th November	Thursday ..	Fodder and Grazing Committee. ..	10-30 A. M.	Jowar Committee	2-30 P. M.
		Animal Nutrition Committee ..	10-30 A. M.	Dairying Committee	2-30 P. M.
1st December ..	Friday ..	Soil Science Committee	10-30 A. M.	Botany and Physiology Committee ..	2-30 P. M.
		Animal Breeding Committee ..	10-30 A. M.	Animal Breeding Committee	2-30 P. M.
2nd December ..	Saturday ..	Fruit Committee	10-30 A. M.	Entomological and Pathological Committee.	2-30 P. M.
		Animal Pests and Diseases Committee ..	10-30 A. M.	Animal Pests and Diseases Committee ..	2-30 P. M.
				Cardamoms Committee	4 P. M.
4th December ..	Monday ..	Full Advisory Board	11 A. M. ..	Full Advisory Board	2-30 P. M.
5th December ..	Tuesday ..	Annual General meeting	11 A. M.		
		Full Advisory Board	11-30 A. M.	Full Advisory Board	2-30 P. M.

N.B.—The full Advisory Board will meet in the Conference Room, First Floor, South Block, Imperial Secretariat Buildings, New Delhi and the various committees will meet in the committee rooms attached to the Conference Room. The Annual General meeting will also be held in the Conference Room.

APPENDIX III.

Note on Subject No. 3 :—Security of tenure for persons employed on the Research Schemes Financed by the Imperial Council of Agricultural Research.

As the Advisory Board is aware, the question of the security of tenure of Research workers employed on the Council's schemes and the institution of a Provident Fund for their benefit was raised at the last meeting of the Board. It was agreed that a note on the subject should be prepared and circulated to the Members and that the matter should be discussed at the next meeting of the Board. A note on the subject has been prepared by Dr. W. Burns, Agricultural Commissioner with the Government of India and a copy thereof is attached. (Annexure).

2. In this connection it may be stated that, while it is true that in the best interests of research work it is desirable that the research workers employed under the Council should have security of tenure, the Imperial Council of Agricultural Research is precluded. under the conditions governing the grants received by it from the Government of India, from incurring any liability—pensionary or otherwise—of a permanent nature.

3. It has been estimated that the grant of Provident Fund benefits on the lines of the Government of India Contributory Provident Fund would entail an additional expenditure of Rs. 36,000 per annum approximately. On the other hand, if quinquennial increments are allowed for new entrants or under revised conditions when schemes are renewed, instead of annual increments as at present, there might be a saving of about Rs. 32,000 per annum. The net extra expenditure involved in that case would be Rs. 4,000 per annum only. It may be pointed out, however, that the estimates given above are only rough approximations.

4. It is expected that the benefits of a Provident Fund will be welcomed by the Research workers and that the substitution of quinquennial for annual increments will not discourage persons who may be in search of long-term posts with reasonable security of tenure or who may seek service in the Council's schemes merely to get experience and training for other jobs. It would, however, be desirable to prevent accrual of the Provident Fund benefits to persons joining the Council's Research schemes merely as stepping-stones to other careers and it may, therefore, be necessary to provide that eligibility to join the Fund should be restricted to persons who may have rendered at least five years' continuous service under the Council.

5. The matter is now for the consideration of the Board.

ANNEXURE.

SECURITY OF TENURE FOR PERSONS EMPLOYED ON TEMPORARY SCHEMES OF RESEARCH FINANCED BY THE IMPERIAL COUNCIL OF AGRICULTURAL RESEARCH.

This matter was last discussed at the Advisory Board in May 1939. The following is the minute on the Subject :—

" The Chairman next pointed out that he would like the Board to consider the question of salaries of the staff employed under

various schemes. On the one hand it was suggested that the staff must have security of tenure and a Provident Fund, but on the other there was the consideration that it would involve the Council in considerable expenditure. An important point for consideration was whether it was necessary to provide for annual increments in the case of staff recruited for a limited period and whether say quinquennial increments might not meet the situation.

Mr. Carpenter suggested that this question had better be discussed at the next meeting of the Advisory Board and that meanwhile a note on the subject be circulated. This suggestion was approved."

I have since then consulted the Public Health Commissioner with the Government of India (with reference to the practice of the Indian Research Fund Association), Sir John Russell (Rothamsted) and Mr. M. L. Nichols of the Soil Conservation Service, United States Department of Agriculture, all of whom have replied. I also wrote to Dr. G. T. Kale of the Tropical and Sub-Tropical Section, International Institute of Agriculture who acknowledged my letter but has not sent me any information.

Under the Indian Research Fund Association, there is no security of tenure. Bye-laws (1) and (2) governing the conditions of service of Research Establishments read as follows :—

"1. *Service under the Association shall be temporary* renewable on a yearly basis subject to the sanction of the Governing Body, unless an officer has been appointed on a contract basis for a specified number of years on special terms.

2. Service under the Association shall not qualify for any pension or gratuity from the funds of the Association."

The Governing Body, Indian Research Fund Association, have however recently decided to institute a contributory Provident Fund for its employees and the draft rules were to be considered at their meeting in September 1939. Sir John Russell replied as follows :—

"*I know of nothing good on the model that would suit India but* the closest approach is the Department of Agriculture at Washington which has its permanent staff of investigators from which it detaches men to work with the State Experiment Stations whenever a problem of magnitude arises. The arrangement works very well and it has resulted in the United States being able to get scientific help on a much more extensive scale than would otherwise have been possible for them ; also it saves a great deal of unnecessary development of staff.

The States organisation is on a far larger scale than could possibly be justified in India but the essential feature is sound and I think you would get from the Department information that would be of value to you in working out the necessary modifications."

In the United States Department of Agriculture, I had written to **Dr. Lowdermilk, the Chief of the Research side of the Soil Conservation Service, whom I had met in England in 1938.** In his absence the

letter was replied to by the Acting Assistant Chief Mr. M. L. Nichols and is as follows :—

"Your letter of the 15th of June addressed to Dr. Lowdermilk, has been referred to me for reply because of his absence upon a study of erosion conditions in foreign countries.

I have discussed the material contained in your letter with Mr. Trullinger of the Office of Experiment Stations of this Department and with certain of the older members of our Service. As we understand it, what you propose is essentially the formation of a preferred register which would be drawn upon for the assignment of specialists to new projects which were undertaken.

There is no such comparbale organization in the United States Department of Agriculture or in the State Agricultural Experiment Stations. From the beginning of work in agricultural research, both in the experiment stations and in this Department the projects have been organized upon the basis of a relatively permanent tenure for the scientific staff. In other words, while the work has been carried out strictly on a project basis and various pieces of research have been terminated from time to time, the demands for continued investigations in related fields have been so numerous that the project leaders and their best trained assistants have been immediately assigned to a new project upon the closing of a specific piece of investigation. This does not mean that there have not been instances where failure of legislatures to appropriate necessary money or a curtailment of Congressional legislation has not caused temporary reduction in scientific staffs. Such occurrences, however, have been the exception rather than the rule and it has ordinarily been possible for the workers affected to obtain other assignments after a reasonable period of time.

It was the opinion of all of the members of the Department with whom I discussed your letter that any other procedure than that which is followed in the American institutions would fail to make use of the accumulated experience and proved research ability of men who have carried out projects successfully. Practically the only period in which we have had numerous short time investigations taken up was at the period of the World War when various emergency activities were undertaken by workers drawn from the State Experiment Stations and from bureaus of the national Government. After the time of the emergency these men, in most instances, returned to their original assignments."

We have here the picture of a permanent body of scientific men who are transferred from one scheme to another as required. It ought to be possible for us to arrange something similar in India and it seems to me that such a permanent body of men could have as their natural bases the Institutes financed by the Central Government.

This does not mean that every single person employed on any of the Imperial Council of Agricultural Research schemes would be permanent. In any scheme there would always be a considerable number of junior

posts which would be filled up by young men desirous of obtaining experience and who would use these posts as stepping stones to other and permanent posts. Should any of these men be of outstanding ability, it would be open to the Council, after having watched their work for say three years, to recruit them to the body of permanent workers. There is something to be said for asking men to go their way and try their luck elsewhere at the end of three years if they are not to be offered permanent posts. Such a procedure would enable a perpetual succession of new men to be trained and it would help to prevent the present state of things, where we find a man serving the Council for eight to ten years, getting well on in life with heavy domestic responsibilities and then finding himself on the termination of a scheme unemployed.

It is plain that this procedure would affect :

(1) The nature of our recruiting,

(2) the presentation of schemes.

(1) *Recruiting.—At present a great deal of time and expense is taken* up by the advertising of posts by the Federal Public Service Commission and the holding of meetings for the selection of candidates for posts in schemes. In a great many cases such candidates are men already employed in other schemes of the Imperial Council of Agricultural Research and very often such men are appointed. Thus we really have the transference of the staff (but by a cumbrous method) from one research activity of the Council to another. If we had a permanent staff who could be allotted to any research on which they were considered suitable, it would eliminate a great deal of this unnecessary selection work. Moreover, it would also eliminate a considerable amount of the present undesirable tendency to appoint in a particular province or State only individuals belonging to that province or State even if better qualified men are available.

(2) As regards the presentations of schemes, some alteration would be necessary. We have been trying more and more to co-ordinate work by *mapping out where work is required and inviting local co-operation in the* carrying out of such work. But we are in effect still in the old state of things in which we are overwhelmed by schemes of all sorts and sizes from all provinces and States without any reference whatsoever to a considered whole. It seems to me that a change in the direction of a permanent staff would bring with it greater co-ordination in the planning of research work and eliminate the present tendency for the province or State that puts up the greatest number of most expensive schemes to get the most money.

If we are to make a beginning in the direction proposed, it means a survey of all schemes about to finish and all schemes about to commence and the arrangement that men of proved ability whose work on any particular scheme is going to terminate *shall be* employed on any other scheme where the Council headquarters staff thinks they will be able to do the work satisfactorily.

APPENDIX IV.

Note on Subject No. 4 :—Request from the Inter-University Board, India, for supply of a list subjects suitable for research at the Universities.

The request from the Inter-University Board, India contained in the enclosed letter (Annexure), regarding supply of a list of subjects suitable for research at the Universities is for consideration of the Advisory Board.

ANNEXURE.

COPY OF A LETTER No. 248, DATED THE 22ND APRIL 1939, FROM THE SECRETARY, THE INTER-UNIVERSITY BOARD, INDIA, LUCKNOW, TO THE SECRETARY, IMPERIAL COUNCIL OF AGRICULTURAL RESEARCH, SIMLA.

I have the honour to communicate to you for necessary action the following resolution passed at the last meeting of the Inter-University Board, India, held at Bombay on 27th and 28th February 1939 :

RESOLUTION XX :

(*a*) RESOLVED that the principles of a closer co-operation between workers in Indian Universities and in Agricultural Research Institutes be approved ;

(*b*) that the Imperial Agricultural Institute, New Delhi, and the Imperial Council of Agricultural Research, be requested to circulate a list of suitable topics of research to the Universities.

A copy of the note sent by the Director, Imperial Agricultural Research Institute is enclosed herewith.

ENCLOSURE.

FACILITIES FOR CLOSER CO-OPERATION BETWEEN WORKERS IN INDIAN UNIVERSITIES AND IN AGRICULTURAL RESEARCH INSTITUTES.

(*A note by the Director, Imperial Agricultural Research Institute.*)

A fair number of post-graduate students in Indian Universities are on the look out for suitable problems to tackle, while the Agricultural Research Institutes often develop in the courses of their work theories and ideas which are best suited for the academic atmosphere of the Universities. A closer touch between the two organizations will therefore be of advantage to both.

The aim of research work carried on in the Universities has, in the past, largely and rightly been on the academic side. Although there is, and will always be, a need for purely academic investigations unhampered by considerations of utility of the work, yet it will advance the progress of research if Universities could take up more from agricultural research. For example, there is no reason why crops and other economic plants should not be included in the academic studies on plants at the Universities. Nor are these profitless material for such studies. The Mendelian Laws, which have now become famous, were originally discovered from a progeny of a useful garden plant.

The need for closer co-operation between the two organisations is therefore put forward for consideration at the meeting of the Inter-University Board, and if the Board agrees with the view, the following suggestions are offered to secure the object :—

1. Grant of scholarships and studentships by Universities to promising graduates working in agricultural institutions whether such institutions are affiliated to the Universities or not. It will be necessary for the agricultural organisations concerned to offer freely material and facilities to workers from the Universities even if it involves sundry expenditure.

2. Exchange of workers for periods of not more than six months. It will be helpful to research workers in Universities if they spend a little time at a centre for agricultural research and come in contact with research workers there, as that will enable them to appreciate the scope and limitations in a field of applied research. On the other hand, an agricultural research worker will sharpen his weapons of attack and enlarge his knowledge of the cognate subjects by a short period of stay in a University research centre.

APPENDIX V.

Note on Subject No. 5 :—1. Application from the National Academy of Sciences, India, Allahabad, for an Annual Recruiting Grant of Rs. 1,000.

2. Application from the Editor-in-Chief, 'Current Science', Bangalore, for an Annual Grant of Rs. 500.

3. Application from the Indian Science News Association, Calcutta, for a Subvention from the Funds of the Imperial Council of Agricultural Research. (No amount has been specified.)

The National Academy of Sciences, India, Allahabad, has applied for an annual recurring grant of Rs. 1,000 from the funds of the Council (*vide* Annexure I). The Editor-in-Chief, 'Current Science', Bangalore, and the Secretary, Indian Science News Association, Calcutta, have also asked for subventions from the funds of the Council ; the former for a sum of Rs. 500 per annum for publishing special supplements dealing with the *most scientific problems and the latter for the dissemination of scientific* knowledge through the medium of Association's Journal—'The Science and Culture'. The amount of subvention required has not been specified by the Indian Science News Association (*vide* Annexures II and III).

2. It will be recalled that an application for an annual recurring grant of Rs. 1,000 was submitted in 1935 by the National Academy of Sciences, India (formerly known as the Academy of Sciences, United Provinces), and an annual grant of Rs. 500 was given to it by the Governing Body in 1936, for a period of three years, as a similar grant was made in 1935 to two other institutions, namely, the Indian Academy of Sciences, Bangalore, and the National Institute of Sciences of India, Calcutta, in aid of their publication work. The third and final instalment of Rs. 500 was paid to the National Academy of Sciences, India, in 1938-39, and the Academy has now applied again for an annual recurring grant of Rs. 1,000. It may be added that the annual grant of Rs. 500 each to the Indian Academy of Sciences, Bangalore, and the National Institute of Sciences of India, Calcutta, was renewed by the Governing Body in December 1937 for a further period of 3 years and a grant-in-aid of Rs. 750 per annum was also sanctioned by that body in July last for the Indian Society of Soil Science in connection with the publication of the proceedings of the symposia arranged by the Society. The following statement shows at a glance the grants made by the Council to scientific institutions for publication work :—

Name of the Institution.	Amount of grant.	Purpose for which sanctioned.
1. Indian Academy of Sciences, Bangalore.	Rs. 500 per annum for three years from 1935-36, *Renewed* for a further period of 3 years from 1938-39.	For expenditure on publication of scientific work.
2. National Institute of Sciences, Calcutta.	Rs. 500 per annum for three years from 1935-36, *Renewed for* a further period of 3 years from 1938-39.	For the abstracting of important papers of scientific value especially those published in India.
3. Academy of Sciences, United Provinces, Allahabad.	Rs. 500 per annum for three years from 1936-37. *Expired* in 1938-39.	For expenditure on publication of scientific work.

Name of the Institution.	Amount of grant.	Purpose for which sanctioned.
4. *The Indian Society of Soil* Science, Calcutta.	Rs. 750 *per annum for three* years from 1940-41 (subject to the Council's normal grant of 5 lakhs being voted by the Central Legislature).	For publishing the proceedings of the symposia arranged by the Society.

3. It may be mentioned in this connection that under its Memorandum of Association one of the functions of the Council is ' to act as a clearing *house of information not only in regard to research but also* in regard to Agricultural and Veterinary matters generally '. In fulfilment of this obligation, the Council publishes 3 journals of its own—(1) Agriculture and *Livestock* in India, (2) *The* Indian Journal of Agricultural Science, and (3) The Indian Journal of Veterinary Science and Animal Husbandry and also an annual review entitled " Agriculture and Animal Husbandry in India " (*formerly known as* " The Review of Agricultural Operations in India "). In addition, scientific monographs and miscellaneous bulletins are issued by the Council whenever material is available.

In order to convert Agriculture and Livestock in India from a bi-monthly into a monthly journal and to make it more popular and useful, a sum of Rs. 10,000 was sanctioned by the Governing Body in July 1938 for one year in the first instance and an Editor with a small staff has been employed by the Council for the purpose.

In accordance with the recommendation of Sir John Russell it has been *decided to publish critical monographs on various subjects. The following* four subjects have been taken up in the first instance :—

1. Dry Farming,
2. Rice Breeding,
3. Rinderpest, and
4. Animal Nutrition.

A sum of Rs. 5,700 was sanctioned by the Governing Body at its meeting held in July last for the preparation of monograph on Dry Farming *Research in India. Steps are being taken to publish the other three mono*graphs as well.

A scheme regarding the publication of abstracts of selected articles from foreign journals in the Indian Journal of Veterinary Science and Animal Husbandry was *started in* 1935 and *a total amount of* Rs. 915 has been spent thereon. A grant of Rs. 1,500 was approved by the Governing Body at its meeting held in July last for the continuance of the scheme for a further period of 3 years.

4. In view of the fairly comprehensive publication work undertaken by *the Council as stated above and of the fact that if the grant is made to one* scientific institution it becomes difficult to resist similar applications from others, it is for the consideration of the Advisory Board if grants from the Council's funds should be *made to the scientific institutions* in India such as those which have now applied therefor in connection with their publications.

ANNEXURE I.

COPY OF LETTER FROM THE GENERAL SECRETARY, NATIONAL ACADEMY OF SCIENCES, INDIA, ALLAHABAD, TO THE SECRETARY, IMPERIAL COUNCIL OF AGRICULTURAL RESEARCH, DATED THE 20TH JULY 1939.

On behalf of the National Academy of Sciences, India, I have the honour to approach you with the request that the Imperial Council of Agricultural Research be pleased to sanction an annual recurring grant of Rs. 1,000 (one thousand) to this Academy.

This Academy was first started in 1930 as the Academy of Sciences of the United Provinces of Agra and Oudh and has since assumed an all-India status. Eminent scientists from all parts of the country are its members and contribute original papers to the Proceedings of this Academy. During the year 1938 there were 176 members of this Academy of whom 50 are experts belonging to agricultural and allied sciences (see Enclosure No. 1).

The Proceedings of the Academy are published four or five times a year and have secured a distinguished position in the international scientific literature. The papers published in the Proceedings have been widely appreciated and abstracted in all important Science Abstracts. The importance of the Proceedings can be judged from the fact that we are receiving 170 foreign and Indian scientific journals in exchange ; of these (?) are on agricultural and allied sciences. So far 80 original papers on agricultural and allied sciences have been published in the Proceedings (see Enclosure No. 2).

The Academy is however unable to increase the size of its journal and to extend the sphere of its useful activities for lack of funds at its disposal. I hope therefore that the Imperial Council of Agricultural Science will appreciate the work that the Academy is doing and render it the financial assistance requested.

It may not be out of place to mention here that the Imperial Council was pleased to sanction a grant of Rs. 500 to this Academy for three years in 1936 [*vide* letter* No. F. 23 (1) 135|G., dated September 8, 1936] for expenditure on publication of scientific work. I may be permitted to point out here that from 1936 to the present day 40 papers on Agricultural and Allied sciences have been published in the Proceedings of this Academy.

ENCLOSURE No. 1.

List of Members connected with Agriculture and Allied subjects.

1. Prof. S. L. Ajrekar, B.A., I.E S., 855, Bhamburda, Poona, 4.
2. Rao Bahadur G. N. Rangaswami Ayyangar, B.A., I.A.S., Millets Specialist to the Government of Madras, Agricultural Research Institute, P. O. Lawley Road, Coimbatore.
3. Prof. K. N. Bahl, D.Sc. (Oxon.), D.Phil., Professor of Zoology, Lucknow University, Lucknow.
4. Abdul Bari, Esq., M.Sc., Lecturer in Botany, Osmania University, Hyderabad, Deccan.

*Not printed.

5. Prof. Y. Bharadwaja, Ph.D., Professor of Botany, Benares Hindu University, Benares.
6. M. L. Bhatia, Esq., M.Sc., *Lecturer in Zoology, Lucknow University*, Lucknow.
7. Prof. D. R. Bhattacharya, D.Sc., Ph.D., Professor of Zoology, Allahabad University, Allahabad.
8. Dr. N. K. Bose, Ph.D., Mathematical Officer, Irrigation Research Institute, Lahore.
9. H. G. Champion, Esq., M.A., Sylviculturist, Imperial Forest Research Institute, Dehra Dun.
10. K. Ahmad Chaudhary, Esq., M.Sc., Wood Technologist, Imperial Forest Research Institute, Dehra Dun.
11. Col. R. N. Chopra, C.I.E., M.B., I.M.S., Director, School of Tropical Medicine, Central Avenue, Calcutta.
12. Prof. B. K. Das, D.Sc. (Lond.), Professor of Zoology, Osmania University, Hyderabad, Deccan.
13. Dr. Ram Saran Das, D.Sc., Zoology Department, Allahabad University, Allahabad.
14. Dr. S. N. Das Gupta, M.Sc., D.I.C., Ph.D., Reader in Botany, Lucknow University, Lucknow.
15. Jagadeshwari Dayal, Esq., M.Sc., Zoology Department, Lucknow University, Lucknow.
16. P. K. Dey, Esq., I.A.S., Plant Pathologist to Government, U. P., Nawabganj, Cawnpore.
17. Dr. N. R. Dhar, D.Sc., F.I.C., I.E.S., Deputy Director of Public Instruction, U. P., Allahabad.
18. S. K. Dutt, Esq., M.Sc., Zoology Department, Allahabad University, *Allahabad*.
19. Prof. J. C. Ghosh, D.Sc., Professor of Chemistry, Dacca University, Dacca.
20. Dr. S. L. Ghosh, Ph.D., Professor of Botany, Government College, Lahore.
21. Dr. K. M. Gupta, M.Sc., D.Sc., Professor of Biology, M. T. B. College, Surat.
22. Dr. *Sam Higginbottom*, Ph.D., *Principal*, Allahabad Agricultural Institute, Naini., E. I. Railway.
23. Khan Bahadur M. Afzal Husain, M.A., M.Sc., I.A.S., Vice-Chancellor, Punjab University, Lahore.
24. Prof. C. C. John, D.Sc., Professor of Zoology, Agra College, Agra.
25. Dr. Shri Krishna, Ph.D., D.Sc., F.I.C., Forest Biochemist, Imperial Forest Research Institute, Dehra Dun.
26. T. S. Mahabale, Esq., B.A., M.Sc., Department of Biology, Gujarat College, Ahmedabad.
27. Dr. Panchanan Maheshwari, D.Sc., Botany Department, Allahabad University, Allahabad.
28. Prof. George Matthai, M.A., Sc.D., F.R.S.E., I.E.S., Professor of Zoology, Punjab University, Lahore.

29. Dr. K. C. Mehta, Ph.D., M.Sc., Professor of Botany, Agra College, Agra.

30. Prof. J. H. Mitter, M.Sc., Ph.D., Professor of Botany, Allahabad University, Allahabad.

31. Prof. P. K. Parija, M.A., I.E.S., Professor of Botany, Ravenshaw College, Cuttack.

32. M. Rahimullah, Esq., M.Sc., Lecturer in Zoology, Osmania University, Hyderabad, Deccan.

33. Shyam Lal Raina, M.Sc., Professor of Biology. S. P. College, Srinagar, Kashmir.

34. K. Ramiah, Esq., Geneticist and Botanist, Institute of Plant Industry, Indore.

35. Dr. Shri Ranjan, D.Sc., M.Sc. (Cantab.), Reader in Botany, Allahabad University, Allahabad.

36. Prof. B. Sahni, D.Sc., Sc.D., F.R.S., Professor of Botany, Lucknow University, Lucknow.

37. Dr. Ram Kumar Saxena. D.Sc., Lecturer in Botany, Allahabad University, Allahabad.

38. Prof. M. Sayeeduddin, M.A., B.Sc., Professor of Botany, Osmania University, Hyderabad, Deccan.

39. Dr. K. C. Sen, D.Sc., Officer Incharge, Animal Nutrition Section, Imperial Veterinary Research, Izatnagar P. O. (U. P.).

40. D. R. Sethi, Esq., I.A.G., Director of Agriculture, Behar, Patna.

41. Janardan Prasad Shukla, Esq., M.Sc., Research Institute (Biochemistry), Indian Institute of Sugar Technology, Cawnpore.

42. Dr. Bhola Nath Singh, D.Sc., Kapurthala, Professor of Agricultural Botany and Plant Physiology, Head of the Institute of Agricultural Research, Hindu University, Benares.

43. Dr. T. C. N. Singh, D.Sc., Assistant Economic Botanist, Incharge Botanical Section, Sabour (Behar).

44. R. C. Srivastava, Esq., B.Sc. (Tech.), Sugar Technologist, Imperial Council of Agricultural Research, India, Cawnpore.

45. Dr. G. S. Thapur, Ph.D., Reader in Zoology, Lucknow University, Lucknow.

46. N. K. Tewary, Esq., M.Sc. (Alld.), Assistant Professor of Botany, Benares Hindu University, Benares.

47. S. C. Verma, Esq., M.Sc., Lecturer in Zoology, Allahabad University, Allahabad.

48. Mason Vaugh, Esq., B.Sc. (Ing.), Agricultural Engineer, Allahabad Agricultural Institute, Naini. (E. I. Railway), Allahabad.

49. Dr. Edgar F. Vestal, Ph.D., Botany Section, Agricultural Institute, Naini., E. I. Railway (Allahabad).

50. Rao Bahadur B. Viswanath, F.I.C., Director, Imperial Agricultural Research Institute, New Delhi.

ENCLOSURE No. 2.

List of papers on Agriculture and Allied subjects.

1. Relation between light intensity and velocity of photo-chemical reactions. By A. K. Bhattacharya.
2. Relation between intensity and velocity of a photo-chemical reaction. By W. V. Bhagwat.
3. Photo sensitised oxidation of ammonia and ammonium salts and the problem of nitroficiation in soils. By G. Gopala Rao and N. R. Dhar.
4. Chemical Examination of the seeds of Thevetia neriifolia. By N. Ghatak.
5. Influence of temperature and light intensity on Photo-synthesis and respiration and an explanation of solarisation and compensation point. By N. R. Dhar.
6. Chemical examination of the fruits of Tribulus terrestris. By Narendra Nath Ghatak.
7. Peroxidase from the fruits of Tribulus terrestris. By N. Ghatak and K. Venkata Giri.
8. Chemical examination of the roots of Thevetia neriifolia. By N. Ghatak and G. P. Pendse.
9. New blood flukes of the family Spirorchidæ Stunkard. By H. R. Mehra.
10. Studies of the effect of phosphates on respiration of green leaves. By U. N. Chatterji.
11. Chemical examination of the seeds of Abrus precatorius, Part II. By Narendra Nath Ghatak.
12. Chemical examination of the leaves of Nyctanthes arbortristis. By Jagraj Behari Lal and Sikhibhushan Dutt.
13. *Chemical examination of the bark of Nerium odorum.* By Gajanan Purushottam Pendse and Sikhibhushan Dutt.
14. Chemical examination of the seeds of Abrus precatorius. Part III. By Narendranath Ghatak.
15. On the trematode parasites of a Rangoon Siluroid fish, Clarius Batrachus (Linnaeus 1785). By R. C. Chatterji.
16. On New Trematodes of frogs and fishes from the United Provinces, Part I. By Har Dayal Srivastava.
17. On New Trematodes of frogs and fishes from the United Provinces, Part II. By Har Dayal Srivastava.
18. On a new trematode with anus belonging to the genus Opegaster Ozaki, 1928, from an Indian eel, Anguilla Bengalensis. By K. R. Harshey.
19. New blood flukes of the family spirorchidæ Stunkard, Part II. By H. R. Mehra.
20. On new trematodes of frogs and fishes from the United Provinces. Part III. By Har Dayal Srivastava.
21. Chemical examination of Punarnava or Boerhaavia diffusa Linn. By Radha Raman Agarwal and Sikhibhushan Dutt.

22. Chemical examination of the seeds of Isabghol or Plantago Ovata. By G. P. Pendse and Sikhibhushan Dutt.

23. Chemical examination of the Kernels of the Seeds of Coesalpinia Bonducella. By Narendranath Ghatak.

24. Nitrogen fixation in Soils on the application of Molasses. By N. R. Dhar, S. K. Mukerji and P. K. Kar.

25. Chemical examination of the Roots of Citrullus Colocynthis Schrader. By Radha Raman Agarwal and Sikhibhushan Dutt.

26. Some aspects of nitrogen fixation in soil. By N. R. Dhar and S. K. Mukerji.

27. On Amphistome Parasites of Sheep and Goat from Allahabad. By K. R. Harshey.

28. On a New Trematode from an Indian Fresh-water Fish. By B. P. Pandey.

29. On New Trematodes of Frogs and Fishes of the United Provinces. By Har Dayal Srivastava.

30. On a new species of Catatropis Odhner, 1905, from an Indian Fowl, Gallus bankiva murghi. By Har Dayal Srivastava.

31. New Hemiurids (Trematoda) from Indian Fresh-water Fishes, Part I. By Har Dayal Srivastava.

32. Some Polyporaceæl from the Central Provinces. By P. R. Bhagwagar.

33. Chemical examination of the Bark of Terminalia Arjuna Bedd. Part I. By R. R. Agarwal and Sikhibhushan Dutt.

34. Chemical examination of Glycosmis Pentaphylla and the constitution and synthesis of its active principle. By Sikhibhushan Dutt.

35. Further experiments on the fixation of atmospheric nitrogen in the soil and the utilization of molasses as a fertilizer. By N. R. Dhar and S. K. Mukerji.

36. Chemical examination of the fruits of Lagenaria Vulgaris seringe (Bitter Variety). Part I. By R. R. Agarwal and Sikhibhushan Dutt.

37. The Chemical examination of Punarnava or Beer-Haavia Diffusa Linn. Part II. By R. R. Agarwal and Sikhibhushan Dutt.

38. Studies of the family Heterophyidæ Odhner, 1911. Part II. By Har Dayal Srivastava.

39. Address of the President. By N. R. Dhar.

40. Influence of temperature on nitrogen fixation by Azotobacter. By N. R. Dhar and S. P. Tandon.

41. Studies on the family Bucephalidæ (Gasterostomata), Part I. By S. C. Varma.

42. Nitrogen fixation and Azotobacter count on the application of molasses and sugars to the soil in fields. Part I. By N. R. Dhar and E. V. Seshacharyulu.

43. Hydrogen Ion concentration and titratable acidity at different stages of fruit ripening. By N. L. Pal.

44. Alkali soils and their reclamation. Part I. By N. R. Dhar and S. K. Mukerji.

45. Studies in the respiration of Mango leaves (Mangifera indica). By N. K. Chatterji.

46. New Hemiurids (Trematoda) from Indian Marine Fishes, Part I. By Har Dayal Srivastava.

47. New Allocreadids (Trematoda) from Indian Marine Fishes, New Parasites of the genus Helicometrina Linton, 1910. Part I. By Har Dayal Srivastava.

48. New Allocreadids (Trematoda) from Indian Marine Fishes. Part II. By Har Dayal Srivastava.

49. Sexual Dimorphism and Post-Embryonic growth in Dialeurodes *dissimilis* Quaint and Baker (Homoptera, Aleurodidæ). By M. L. Roonwal.

50. Nitrogen fixation and Azotobacter count on the application of sugars to the soil. Part II. By N. R. Dhar and E. V. Seshacharyulu.

51. Studies on the family Bucephalidæ (Gasterostomata). Part II. By S. C. Varma.

52. Nitrogen fixation in soil with Cellulosic substances, Cowdung and fats. Part I. By N. R. Dhar and S. K. Mukerji.

53. Chemical examination of the bark of terminalia Arjuna Bedd. Part II. By Radha Raman Agarwal and Sikhibhushan Dutt.

54. Chemical examination of the fruits of Physalis Peruviana or Cape-goose Berry, Part I. By Jagraj Behari Lal.

55. Apparatus for the Measurement of respiratory Quotient in Plants By Bhola Nath Singh and Prem Bihari Mathur.

56. Address of the President. By N. R. Dhar.

57. On a new species of the genus Astiotrema Looss, 1901, from the Intestine of a Fresh Water Fish, Clarias Batrachus. By J. Dayal.

58. On the occurrence of Skrjabinema ovis (Skrjabin, 1915) in India. By M. Abdussalam.

59. Studies on the Effect of alcohol on the Respiratory rate of leaves. By U. N. Chatterji.

60. Chemical examination of Indigofera linifolia, Retz. The isolation of its Active Principle. By Mahadeo Prasad Gupta and Sikhibhushan Dutt.

61. Studies on the trematode Parasites of Fishes. A new Trematode Nizamia hyderabadi, N. Gen., N.Sp., from the intestine of a fresh-water Fish, Ophiocephalus punctatus. By J. Dayal.

62. Chemical examination of the Fruits of Physalis peruviana or Cape Gooseberry. Part III. By Jagraj Behari Lal.

63. A new trematode. Gorgotrema barbius, N. Gen., N. Sp., from a Fresh-water Fish, Barbus sarana. By J. Dayal.

64. Annotated list of the Helminths recorded from Domesticated Animals of Burma. Part I.—Trematoda. By R. C. Chatterji.
65. On two New Trematodes from Indian Cyprinoid Fishes with remarks on the Genus Allocreadium Looss. By B. P. Pande.
66. Chemical Examination of the essential oil of Ocemum Carnum. By Jagat Narain Tayal and Sikhibhushan Dutt.
67. Respiratory response of ripe tomatoes and dormant potatoes following wounding. By B. N. Singh and P. B. Mathur.
68. On anylase from Indian water chestnut. By Radha Raman Agarwal.
69. Superposed parasitism of cuecuta reflexa. By B. N. Singh and M. V. Saradhy.
70. The prevention of rots in tomatoes with special reference to the Mould's attack. By B. N. Singh and J. P. Jakhanwal.
71. Two new fish trematodes from Allahabad. By B. P. Pande.
72. Chemical examination of the seeds of Physalis peruviana or Cape Gooseberry, Part II. By Mahadeo Prasad Gupta and Jagraj Behari Lal.
73. Chemical examination of the seeds of Isabghol, Plantago ovata Forsks. By G. P. Pendse.
74. Similarity between Nitrogen fixation and Carbon Assimilation. By N. R. Dhar, E. V. Seshacharyulu and S. K. Mukerji.
75. Nitrogen Fixation and Azotobacter Count on the application of Carbohydrates and other energy-rich Materials to the Soil, Part III. By E. V. Seshacharyulu.
76. Changes in Soil Nitrogen after the addition of fresh Cowdung to Soil. By Sudhir Kumar Mukerji.
77. Fungi of Mussoorie. By J. H. Mitter and R. N. Tandon.
78. Modern developments in the science of soil and plant nutrition. By Rao Bahadur B. Viswanath.
79. Address of the President—Revolutions in the plant world. By B. Sahni, F.R.S.
80. A contribution to the morphology of Digera Arvensis. By S. P. Naithani.

ANNEXURE II.

COPY OF LETTER FROM THE EDITOR-IN-CHIEF, 'CURRENT SCIENCE', BANGALORE, TO THE SECRETARY, IMPERIAL COUNCIL OF AGRICULTURAL RESEARCH, No. 1122|14-A., DATED THE 24TH JULY 1939.

I have the honour to request you to be so good as to place this letter before the Vice-President for his favourable consideration.

You are aware that our applications* in previous years for financial assistance in conducting 'Current Science' have not heen entertained by

*Not placed before the Advisory Board.

the Imperial Council of Agricultural Research on grounds of financial stringency. The main reason for renewing the application is that it is proposed to add a new feature to the journal which, while it is absolutely necessary to improve its service and enhance its recognition, cannot be undertaken without subventions from scientific bodies like the Imperial Council. The present position of the journal can be estimated from the fact that Sir Richard Gregory, Bt., F.R.S., lately Editor, 'Nature', Dr. Arnold Berliner, Ph.D., D.Sc., *Ex*-Editor, 'Naturwissenschaften' and Mr. J. McKeen Cattell, Editor, 'Science', are now acting as Corresponding Editors of 'Current Science'; that some of the scientists occupying the foremost rank such as Prof. Ruzicka (Switzerland), Prof. Vinogradow (Russia), Dr. The Svedberg (Sweden), Dr. Otto Meyerhof (Germany), Prof. Northrop (N. Jersey), Prof. Kenneth M. Smith (Cambridge), Dr. Rudolf A. Peters (Oxford) and other such as Prof. Polanyi (Manchester), Prof. Harold C. Urey (Columbia), Prof. K. T. Bainbridge (Harward University), Prof. Robert Robison (London), Prof. Chadwick (Liverpool), etc., etc., have already written or have promised to write.

Supplements on "The mechanism of enzyme action" (Dr. A. Foder, Jerusalem), "Neue versuche uber den mechanismus der enzymatischen kohlehydratspaltung" (Dr. Otto Meyerhof, Heidelberg), "The first Jena Catalogue of Optical Glasses Published in 1886" (Dr. Moritz von Rohr, Jena), "Vitamin B_1 (Oryzanyn, Torulin, Aneurin)" (Prof. R. A. Peters, Oxford), etc., etc., have already appeared in 'Current Science' and a few more are awaiting publication.

Recently Dr. Berliner wrote to us suggesting that a new feature might be added to 'Current Science', by periodically publishing special supplements dealing with the most outstanding scientific problems. Besides this, we have proposed to issue supplements on special topics written by one author occupying an authoritative position. In consultation with Dr. Max Born, we have prepared programmes for the special supplements and some of the topics selected are :—

25 Years of Laue Diagrams.

50 Years of Canal Rays.

Genetics,

Organisers in animal development,

Heavy water,

Modern Therapy—insulin and liver therapy,

Sex Harmones,

Stellar Evolution,

Tectonics,

Archæan Rocks, etc., etc.,

and the authors invited to contribute are,—

Sir J. J. Thomson.	Sir W. H. Bragg.
Dr. F. W. Aston.	Dr. P. P. Ewald,
Prof. R. Traubenberg.	Dr. L. C. Pauling,
Dr. Arnold Berliner.	Dr. A. Sommerfeld.
Dr. Max Born	Prof. H. Mark,
Dr. V. M. Goldschimidt,	Prof. Birbal Sahni.

Dr. Harold C. Urey,	Dr. O. Mangold,
Dr. A. Butenandt,	Prof. H. Kihara,
Prof. George R. Minot,	Prof. E. B. Babcock,
Dr. Hans Spemann,	Sir L. L. Fermor,

Sir John Smith Fleet, etc. etc.

I may add here that the first three special numbers have already been published at considerable expense and the fourth number on Organisers in Animal Development is just published.

The monthly supplements will have a separate programme and the authors will be authorities on the subject. The following subjects have been selected :—

Chemistry of plant pigments ..	Prof. Robison.
Recent Researches on the chemistry of carbo hydrates.	Prof. W. Haworth.
Heavy hydrogen in organic chemistry.	Prof. Ingold.
Enzymes	Prof. Willstatter.
Blood Pigments	Prof. Hans Fischer.
Bile Acids	Prof. Wieland.
Thermodynamics in chemistry	Prof. G. N. Lewis.
Kinetics of chemical gas re-actions.	Prof. Hirshelwood.
Magnetochemistry ..	Prof. S. S. Bhatnagar.
Membrane equilibrium ..	Prof. Donnan.
Surface reactions ..	Prof. Rideal.
Structure of molecules ..	Prof. Allnand.
Surface films	Prof. N. K. Adam.

We also intend issuing monthly supplements which will include a series of articles describing the work of the Government scientific departments and surveys, in order to focus the attention of Governments on the importance of scientific work in relation to their policies requiring the application of scientific knowledge.

The size of the journal has been steadily growing mainly because of the numerous contributions from the research laboratories of the universities and the journal has been steadily fulfilling its purpose, *viz.*, to represent to the scientific world the collective output of research work from official research institutes and universities more especially those important discoveries which require speedy publication.

Numerous representations have been repeatedly made to us regarding the need and importance of converting the journal into a "Weekly" but we cannot immediately launch a weekly under our present financial situation. It is, however, time that the journal should appear as a "Fortnightly".

This very desirable change cannot be undertaken without additional expenditure for which the present financial position can make provision

only with the assistance from the scientific bodies. It is expected that the journal with its special features might increase our subscription list, but this is only a hope.

It now remains for me to request the Vice-President to consider the service which 'Current Science' has been rendering to Indian Scientific Research in every field of knowledge and what it proposes to achieve in the same direction in the future. At present if he should be pleased to sanction an annual grant of Rs. 500 it will be a great assistance and the sum that we ask for is almost negligible from the view point of the Council budget, but the cause it promotes is one that deserves the greater sympathy of the Council.

ANNEXURE III.

COPY OF LETTER FROM THE SECRETARY, INDIAN SCIENCE NEWS ASSOCIATION, CALCUTTA, TO THE SECRETARY, IMPERIAL COUNCIL OF AGRICULTURAL RESEARCH, DATED THE 10TH MAY 1939.

You may be aware that more than four years ago a number of prominent educationists and scientists of the country formed into an Association—Indian Science News Association—with the object of propagating scientific news with particular reference to the problems of our national reconstruction. The Association, immediately after its inauguration, started a monthly journal, "Science and Culture" to utilise it as a medium of its activities. The journal will commence its fifth volume with the coming July, 1939 issue.

You will be interested to know that we have frequently published articles on agricultural science and the methods of improving the condition of agriculture, and brought to the notice of our readers the beneficent activities of the Imperial Council of Agricultural Research. A representative list of such articles is given below :

Science in the service of Indian Agriculture,
The need for Crop planning,
Fruit preservation,
Vernalisation,
Size and longevity in plants,
Plant hybridizing work in India,
Breeding for disease resistance in Agricultural plants,
Some aspects of Vernalisation,
Some plant diseases and pests of India and their control,
Plant sociology and its economic importance,
Vernalisation in the Topics (ready for the press).

We are glad to note that our journal is in exchange list of the periodicals issued under the authority of your Council.

In appreciation of the activities of the Association donations and grants have been forthcoming from scientific bodies, universities and industrial organisations, besides a number of private individuals. We understand that the Imperial Council of Agricultural Research give from

time to time subsidies to various organisations who supplement their work. As our journal reaches a very large number of educational and research institutes and scientific workers besides a good section of general reading public, we daresay that the discussions in the journal of the subjects referred to above have helped materially to a great extent the Government efforts under the directions of your Council, to bridge the gap between the scientist in the agricultural research laboratory and the general public.

We therefore beg to appeal that in view of the services that we are doing in the cause of nation building you will kindly place before your Council the desirability of granting our Association a subvention from the funds which lie at your disposal.

APPENDIX VI.

Note on Subject No. 2-A :—Reconstitution of the Standing Wheat Committee.

In November 1937, the Advisory Board recommended the reconstitution of the Standing Wheat Committee for a period of one year with effect from the 19th February 1938, with its existing personnel. The idea was to have another year's experience before re-considering the membership and functions of the Committee (*vide* pages 10-11 and 143-145 of the printed proceedings). While approving of the reconstitution of the Committee as recommended by the Advisory Board, the Governing Body, in December 1937, suggested that during that period a report would be made to the Governing Body whether such a big committee was necessary.

2. As the Committee did not actually meet during the year after its reconstitution in February 1938, it was not reconstituted on the expiry of its term in February 1939, but was granted an extension of term by one more year, with effect from the 19th February 1939. It met in May 1939.

3. As the present term of the Committee expires in February 1940, the proposal for its re-constitution for a further term and the revision of its membership and function are for the consideration of the Advisory Board. A copy of its existing personnel is enclosed (Annexure.)

ANNEXURE.

COMPOSITION OF WHEAT COMMITTEE.

Personnel.

1. The Vice-Chairman, Imperial Council of Agricultural Research. Chairman, *ex-officio*.

2. The Agricultural Commissioner with the Government of India—I. C. A. R.

3. The Agricultural Marketing Adviser to the Government of India.

4. The Economic Adviser to the Government of India.

5. The Senior Marketing Officer (Wheat).

6. The Statistician, Imperial Council of Agricultural Research.

7. The Director, Imperial Agricultural Research Institute.

8. The Imperial Economic Botanist, New Delhi.

9—17. The Directors of Agriculture, United Provinces, Punjab, Bihar, Central Provinces, and Berar, Sind, Hyderabad, the Commissioner of Agriculture, Baroda, and the Director of Agriculture, Bhopal, and the Agricultural Officer, North-West Frontier Province.

18—22. Five representatives of wheat growers, one each from United Provinces, Punjab, Bihar, Central Provinces, and Berar and Sind—

United Provinces—Nawab Jamshed Ali Khan, Bhagpat, Meerut (U. P.).

Punjab—Sir W. Roberts, C.I.E., Managing Director, British Cotton Growers' Association, Khanewal.

Bihar—Pandit Gobind Pati Tiwari, M.L.A., Village Daularpur, P. C. Bethua Bazar, District Saran.

Central Provinces and Berar—Sjt. Beohar Rajendra Sinha, M.L.S., Jubbulpore.

Sind—Mr. P. S. Tolani.

23. The Crop Botanist, Bombay.

24. The Cerealist, Lyallpur.

25. The Economic Botanist, (Rabi Cereals), U. P.

26. The Economic Botanist, Central Provinces and Berar.

27. The Economic Botanist, Sind.

28. The Rust Research Officer—Dr. K. C. Mehta, Agra College, Agra.

29-30. Two Professors of Economics—

1. Dr. Radhakamal Mukherjee, M.A., Ph. D., Professor of Economics, Lucknow University, Lucknow.
2. Professor A. C. Sen Gupta, M.A. (Edin.), I.E.S., Head of Department of Economics, Nagpur University, Nagpur.

31. A representative of the Associated Chamber of Commerce—Mr. F. C. Fyffe, C|o Messrs. Shaw Wallace & Co., 4|5, Banksball Street, Calcutta.

32. A representative of the Federation of the Indian Chambers of Commerce and Industry—Mr. Rati Lal Mulji Gandhi, C|o Messrs. R. Rati Lal & Co., 4, Chinch Bunder Road, Bombay 9.

33—36. Four representatives of wheat trade, one each from Karachi, United Provinces, Punjab and Central Provinces, and Berar—

Karachi.—Mr. Ruplal Shankardas, C|o Messrs. Shankardas Ruplal, Bellasis Street, P. O. Box No. 196, Karachi.

Punjab.—Lala Mahanarain, Managing Director, Ganesh Flour Mills, Lyallpur.

United Provinces.—Mr. Ripusudan Singh, Hapur, Secretary, Chamber of Commerce, District Meerut.

Central Provinces and Berar.—Seth Deepchand Gothi, Proprietor of the firm of Pratapmal Laxmichand of Batulganj and Itarsi Betul.

37. One reperesntative of the flour Milling Industry—Mr. K. L. Jatia, Chairman, Calcutta Flour Mills Association, Royal Exchange, Post Box No. 280, Calcutta.

38. Secretary, Imperial Council of Agricultural Research, Secretary, *ex-officio.*

APPENDIX VII.

Note by Secretary, Imperial Council of Agrcultural Research, dated the 7th September 1939, on Subject No. 6 :—Recommendation of the Conference of Ministers on Agricultural Marketing, 1938, regarding the setting up of a Standing Committee for Crop-Planning under the Imperial Council of Agricultural Reseorch—Report of a Preliminary Sub-Committee.

An informal meeting, at which the Vice-Chairman, Imperial Council of Agricultural Research, the Agricultural Commissioner, Animal Husbandry Commissioner and the Agricultural Marketing Adviser were present, was held on September 6, 1939, to consider whether the setting up of a crop planning committee of the Imperial Council of Agricultural Research as recommended by the Conference of Ministers on Agricultural Marketing (1938) is desirable and, if so, how it should be constituted and what should be its functions.

2. After a good deal of discussion of the practical problems involved in crop-planning and the correlation of production and demand, it was decided to make the following rerommendations :—

(a) A Central Committee of the Imperial Council of Agricultural Research should be set up for Economic Development to advise as to what steps should be taken by Provinces and States to develop Indian agricultural and animal husbandry generally and, in particular, to correlate production and demand.

(b) Assistant should be given to this Central Committee by having Standing Commodity Committees for (1) Rice, (2) Wheat, (3) Sugarcane, (4) Fodder and Grazing, (5) Dairying, (6) Livestock, (7) Fruits and Vegetables, (8) Fish, (9) Tobacco, (10) Oilseeds and (11) Hides and Skins and Wool. [Certain of these already exist, *e.g.*, for Rice and Sugarcane. The others would have to be created. In some cases, *e.g.*, Fruits and Vegetables, they would take over also the functions that have so far been exercised by a purely *ad hoc* committee dealing with the subject.]

(c) Each of these Commodity Committees should be asked to constitute from itself an Economic Sub-Committee (consisting, among others, of representatives of produces, manufacturers, exporters and the Marketing Staff) to consider and formulate proposals on economic matters for consideration of the full committee, and that economic questions relating to production and marketing of the particular commodity should regularly constitute separate items on the agenda at each meeting of the committee which should, as far as possible, be held separately from the meetings of the Advisory Board.

(d) The Central Standing Committee on Economic Development should consist of the Headquarters Officers of the Imperial Council of Agricultural Research, including the Agricultural Marketing Adviser and certain other Officers of the

Departments of the Government of India (such as the Economic Adviser to the Government of India, the Director-General of Commercial Intelligence and Statistics and one or two others) and one representative elected by each of the Standing Commodity Committees.

(e) Recommendations of the Central Committee, not involving any allocation of money from the Research Funds of the Council, would be submitted direct to the Governing Body of the Council and their decisions or recommendations would be communicated to the Provinces and States concerned for such action as they might think fit to take.

The subject is now for consideration.

APPENDIX VII-A.

Supplementary Note on Subject No. 6 :—Suggestions regarding personnel of Commodity Committee.

—	Rice.	Wheat.	Sugar.
1. Agricultural Commissioner.	Agricultural Commissioner.	Agricultural Commissioner.	Agricultural Commissioner.
2. Madras	Paddy Specialist ..	....	....
3. Bombay ..	Crop Botanist ..	Crop Botanist ..	Principal Agricultural Officer, Padegaon—Dr. Basu.
4. Central Provinces	Rice Specialist ..	Economic Botanist ..	....
5. United Provinces ..	Economic Botanist, In-charge Sugarcane and Paddy.	Economic Botanist ..	Economic Botanist. Sugarcane and Paddy and Director of Agriculture.
6. Punjab	....	Cerealist	Economic Botanist.
7. Bengal	Economic Botanist ..	....	Economic Botanist.
8. North-West Frontier Province.	....	Agricultural Officer. ..	....
9. Bihar	Rice Specialist ..	....	....
10. Orissa	Rice Botanist ..	....	Dr. Badami.
11. Sind	Economic Botanist ..	Economic Botanist ..	....
12. Assam	Rice Botanist ..	....	Officer in-charge of Jorhat Station.
13. Baluchistan ..	....	Agricultural Officer ..	....
14. Coorg	Mr. Sprott	....	....
15. Kashmir ..	Director of Agriculture	....	....
16. Baroda	Commissioner of Agriculture.	Commissioner of Agriculture.	....
17. Mysore	Rice Botanist ..	....	Officer in-charge of Irwin Canal Farm.
18. Travancore ..	Director of Agriculture	....	....
19. Bhopal	....	Director of Agriculture	Director of Agriculture.
20. Hyderabad ..	Economic Botanist ..	Economic Botanist ..	Economic Botanist.
21. Imperial Council of Agricultural Research Institute.	....	Imperial Economic Botanist.	Imperial Economic Botanist, Imperial Entomologist and Imperial Mycologist.
22.	Mr. Ramiah (Indore) ..	Imperial Mycologist ..	Sugarcane Geneticist.
23.	Imperial Mycologist ..	....	Director, Imperial Institute of Sugar Technology. Dr. Haldane and Dr. Templer.

—	Tobacco.	Oilseeds.	Fruit.
1.	Agricultural Commissioner.	Agricultural Commissioner.	Agricultural Commissioner.
2. Madras	Economic Botanist ..	Oilseeds Specialist ..	Mr. Naik (Kodur).
3. Bombay	Tobacco Breeder, Gujrat	Economic Botanist ..	Dr. Cheema (Horticulturist).
4. Central Provinces	Economic Botanist ..	Oilseeds Specialist ..	Director of Agriculture.
5. United Provinces	Economic Botanist ..	Economic Botanist (Mr. Sabnis).	Director of Agriculture.
6. Punjab	Economic Botanist ..	Oilseeds Specialist ..	Fruit Specialist (S. B. Lal Singh).
7. Bengal	Economic Botanist ..	Economic Botanist ..	Economic Botanist.
8. Bihar	Economic Botanist ..	Economic Botanist ..	Fruit Specialist (Sabour).
9. Orissa ..	Dr. Badami	....	Dr. Badami.
10. Assam	....	....	Director of Agriculture.
11. Baluchistan ..	....	....	Agricultural Officer.
12. Coorg	....	....	Mr. Sprott.
13. Kashmir ..	....	....	Director of Agriculture.
14. Baroda	Agricultural Commissioner.	....	....
15. Mysore	Director of Agriculture	Director of Agriculture	Director of Agriculture.
16. Travancore ..	....	Director of Agriculture	....
17. Bhopal	....	....	....
18. Hyderabad ..	Economic Botanist ..	Economic Botanist ..	Economic Botanist.
19. 20. 21. *Imperial Agricultural Research Institute.*	*Imperial Economic Botanist.* Imperial Mycologist. Imperial Entomologist.	*Imperial Economic Botanist.* Imperial Mycologist. Imperial Entomologist	*Imperial Economic Botanist.* Imperial Mycologist. Imperial Entomologist.

Suggestions by the Agricultural Marketing Adviser to the Government of India for the Economic side of the proposed Oilseeds Standing Committee.

OIL MANUFACTURERS.	**(Linseed, rapeseed and mustard.)**	**Representatives.**
United Provinces ..	**The United Provinces Oil Millers Association, Cawnpore .. .. ..**	**Mr. Radhalal Garg.**
Bengal.. ..	**Bengal Oil Mills Association, Calcutta ..**	1
Bihar	**(*a*) Shree Bihariji Mills, Patna .. ..** or **(*b*) Bhagalpur Mills.**	1
	(Copra).	
Karachi ..	**Bodaram Arjandas .. .. ..**	1
South India ..	**The Tata Oil Mills ,Ernakulam .. ..**	1

(CASTOR, LINSEED AND GROUNDNUTS

Bombay	..	Oil and Cake Traders Association, Bombay	Mr. C. S. Patel.
Hyderabad	..	Hyderabad Chamber of Commerce, Hyderabad (Deccan)	1

(COTTONSEED).

Punjab ..	..	Guru Arjan Dev Oil Mills, Sargodha (Punjab)	1

VANASPATI MANUFACTURERS.

Bombay	..	The Hindustan Vanaspati Manufacturing Co., Ltd., Bombay.	Mr. Gourley.
North India (Lyallpore and Cawnpore).		Ganesh Mills	Mr. Maha Narain.

SOAP MANUFACTURERS.

South India	..	Mysore Government Soap Factory ..	1
North India	..	(to be selected later)	1

TRADE ASSOCIATIONS.

Bengal ..	..	Calcutta Wheat and Seeds Association ..	1
Bombay ..	..	Marwadi Chamber of Commerce, Bombay ..	1
		Seed Traders Association, Bombay ..	1

SHIPPERS.

Bengal ..	..	Bengal Chamber of Commerce	1
Bombay	..	Bombay Chamber of Commerce	1
Madras ..	..	Madras Chamber of Commerce	1

AGMARK OIL PACKERS.

		(to be selected)	2

COIR SHIPPERS AND MANUFACTURERS.

South India	..	Travancore Chamber of Commerce ..	Mr. Haydon.
		Calicut Chamber of Commerce	1

LUBRICANTS—USERS OF.

		Railways or Indian Stores Department ..	1
		Government Test House, Alipore ..	1

OIL TECHNOLOGIST.

		Oil Technologist, Harcourt Butler Technological Institute, Cawnpore	Mr. Athawale.

MARKETING.

		Agricultural Marketing Adviser to the Government of India	1
		Senior Marketing Officer, In-charge Cereals and Oilseeds	1
		Total ..	**27**

Proposed Standing Fruit and Special Crops Committee.

Suggested Representatives for Economics and Commercial Side.

3 Representatives, Fruit Growers ..	Mr. G. E. Wakefield, N. I. Farms, Rawalpindi Agmark Packers. (Madras Orange Growers). U. P. Fruit Development Board.
2 Representatives, Patato Growers ..	Agmark Packers—Nilgiris. The Nilgiris District Potato and Agricultural Produce Growers Co-operative Sale Society Ltd., Ootacamund, Anaikara Street, Muttupalayam. Agmark Packers—Bihar. Bihar-Shariff Potato Marketing Association Bihar-Shariff, Patna.
2 Representatives, Fruit Products Manufacturers.	Capt. Mitchell, Punjab. *Madhu Canning* Co., Bombay.
1 Representative—Sugar Technology ..	Sugar Technologist, Cawnpore.
2 Representatives, Fruit Merchants and Distributors.	Dhoble & Co., Crawford market, Bombay. Fruit Merchants Association, Delhi.
2 Representatives, Nurserymen ..	L. R. Brothers, Saharanpur. Messrs. Munniswamy & Sons, Bangalore
1 Senior Marketing Officer	Incharge fruits and vegetables.

Proposed Standing Livestock Committee.

The Vice-Chairman Imperial Council of Agricultural Research. } *Ex-officio.*
The Animal Husbandry Commissioner with the Government of India. }

Scientific Representatives.

1. Mr. E. J. Bruen, Livestock Expert, Bombay.
2. Mr. T. J. Hurley, Director of Veterinary Services, Madras.
3. Mr. M. S. Jung, Deputy Director of Agriculture (Livestock), United Provinces.
4. Capt. W. Read, Superintendent, Cattle Farm, Hissar.
5. Mr. S. M. Sarwar, Superintendent, Civil Veterinary Department, Peshawar.
6. Dr. P. E. Lander, Agricultural Chemist, Lyallpur.
7. Mr. Anwarullah, Agricultural Chemist, Bihar.
8. Mr. I. B. Chatterji, Physiological Chemist, Dacca.
9. Rao Sahib D. V. Bal, Agricultural Chemist, Central Provinces.
10. Mr. P. V. Ramiah, Agricultural Chemist, Coimbatore.
11. Mr. B. K. Badami, Director of Veterinary Department, Hyderabad.
12. Mr. E. S. Farbrother, Director of Veterinary Services, Bombay.

13. Mr. A. D. MacGregor, Director, Civil Veterinary Department, Bengal.

14. Mr. T. J. Egan, Director of Veterinary Services, United Provinces.

15. Capt. U. W. F. Walker, Director of Veterinary Services, Lahore.

It is proposed that of the above officers Nos. 1 to 5 should form an expert sub-committee for ' Breeding ' and Nos. 6 to 10 for ' Nutrition ' and Nos. 11 to 15 for ' Pests and Diseases '.

From the list of Central Government Representatives given below it is proposed that the Vice-Chairman, Imperial Council of Agricultural Research, should have the power or coopting to the appropriate Sub-Committee any of the officers required for the consideration of special subjects.

CENTRAL GOVERNMENT REPRESENTATIVES.

16. The Director, Imperial Veterinary Research Institute, Mukteswar.

17. Rao Bahadur B. Viswanath, Director, Imperial Agricultural Research Institute.

18. Director of Dairy Research (or representative).

19. The Public Health Commissioner (or representative).

20. The Imperial Agriculturist, Imperial Agricultural Research Institute.

21. The Serologist, Imperial Veterinary Research Institute.

22. The Entomologist, Imperial Veterinary Research Institute.

23. The Helminthologist, Imperial Veterinary Research Institute.

24. The Officer-in-Charge, Animal Nutrition Section, Imperial Veterinary Research Institute.

25. The Officer-in-Charge, Poultry Research Section, Imperial Veterinary Research Institute.

26. Dr. B. Sundara Raj, Director of Fisheries, Madras.

TRADE REPRESENTATIVES.

1. *Cattle Breeders* ..	The Pattagar of Palayakottai, Madras.
2.	Mr. P. Kothawala, Ahmedabad.
3. *Cattle Trade* (Export) ..	Mr. D. J. Patel, Karachi.
4. *Cattle Trade* (Internal) ..	Cattle Dealers' Association, Rohtak.
5. Pinjrapoles	From Pinjrapole, Bombay.
6.	From Pinjrapole, Calcutta.
7. *Sheep Breeders and Wool Producers.*	One Representative, Fazilka.
8. *Wool Trade*	Wool Merchants Association, Fazilka.
9.	Wool Merchants Association, Beawar.
10. *Woollen Yarn Manufacturers.*	Oriental Carpet Manufacturing. Co., Amritsar.

11. *Woollen Mills* ..	Lalimili Woollen Mills, Cawnpore. Kaiseri-hind Woollen Mills, Bangalore.
12. *Cottage Industry* ..	All-India Village Industries Association, Wardha.
13. *Fisheries*	Director of Industries, Madras.
14. *Tanners (Leather)* ..	Indian Tanners Federation, Cawnpore.
15. *Tanners (half-tanned)* ..	Trade Representative, Madras.
16. *Shippers*	Hides and Skins Shippers Association, Calcutta.
17. *Goat and Sheep Skins*	Messrs. Shamjimal and Company, Amritsar.
18.	Mr. Siddique, Delhi.
19. *Lamb, Kid and Fur Skins*	Exporters' representative, Mr. Beckner, Delhi.
20. *Guts and Casings* ..	Messrs. Barlas Brothers, Exporters, Delhi.
21. *Eggs*	Representative of Agmark Egg Packer, North-West Frontier Province or Bengal.
22. *Marketing*	The Agricultural Marketing Adviser, Delhi.
23.	Senior Marketing Officer (Livestock).

PROPOSED STANDING DAIRYING COMMITTEE.

The Vice-Chairman Imperial Council of Agricultural Research.	*Ex-officio.*
The Animal Husbandry Commissioner with the Government of India.	

SCIENTIFIC REPRESENTATIVES.

1. Mr. B. N. Banerji, Indian Institute of Science, Bangalore.
2. Sardar Bahadur Sir Datar Singh, Montgomery.
3. Mr. D. N. Khurody, Senior Marketing Officer, Delhi.
4. Professor J. M. Warner, Agricultural Institute, Allahabad.
5. Mr. H. C. Verma, Imperial Dairy Institute, Bangalore.
6. Major C. E. MacGuckin, Assistant Director, Military Dairy Farms, Lahore.
7. Mr. F. J. Gossip, Livestock Expert, Bengal.
8. Mr. Zal R. Kothavala, Imperial Dairy Expert, Bangalore.
9. Mr. R. C. Woodford, Livestock Expert, Assam.
10. Mr. A. M. Ulvi, Livestock Officer, Sind.

It is proposed that of the above officers Nos. 1 to 5 should form an expert sub-committee for 'Dairy Technology' and Nos. 6 to 10 for 'Dairy Husbandry'.

From the list of Central Government Representatives given below it is proposed that the Vice-Chairman, Imperial Council of Agricultural Research, should have the power of co-opting to the appropriate sub-committee any of the officers required for the consideration of special subjects.

CENTRAL GOVERNMENT REPRESENTATIVES.

11. The Director of Dairy Research.
12. Rao Bahadur B. Viswanath, Director, Imperial Agricultural Research Institute.
13. The Director, Imperial Veterinary Research Institute (or representative).
14. The Public Health Commissioner (or representative).
15. The Imperial Agriculturist, Imperial Agricultural Research Institute.

TRADE REPRESENTATIVES.

1. *Milk Producers*	..	Mr. W. Keventer, Aligarh.
2. *Co-operative Dairies*	..	Co-operative Milk Union, Calcutta.
3.		Co-operative Milk Union, Madras.
4. *Merchants and Distributors.*		Buffalo Merchants' Association, Bombay.
5. *Pinjrapoles* ..	..	Pinjrapole, Karachi.
6.		Pinjrapole, Ahmedabad.
7. *Ghee trade* ..	..	Agmark Ghee Packers, Khurja. (M/s. Ashok Chandra Rakhit Ltd.).
8.		Agmark Ghee Packers, Porbandar. (Indian States.)
9. *Butter Trade*	..	Polson Ltd., Bombay.
10.		Butter Manufacturers, Coimbatore.
11. *Cream and Casein*	..	Messrs. Doshi Bros. Cream and Casein Merchants, Anand.
12. *Ice Cream* ..	..	Spencer & Co., Ltd., Madras.
13. *Public Health*	.	Dr. Nirulkar, Chief Officer of Health (Retired), Bombay.
14. Marketing ..	..	The Agricultural Marketing Adviser.

APPENDIX VIII.

Note on Subject No. 8 (a) :—Fruit Research—Technical Programmes—Bombay Scheme of Cold Storage Research.

A copy of a technical programme of work under the extension scheme of cold storage research work (including gas storage investigations) at Ganeshkhind is attached (Annexure I). The technical programme has been prepared on the basis that the scheme would be extended for three years as recommended by the Advisory Board at its meeting held in May 1939 whereas the Governing Body has sanctioned the scheme only up to 31st March 1942 (2 years and 1 month). A revision of the details has therefore been considered necessary and the Government of Bombay has been addressed to revise the programme in the light of certain suggestions offered by the Agricultural Commissioner (Annexure II). The revised programme, if received in time, will be placed before the Board.

2. The programme will first be considered by the Fruit Sub-Committee whose report will be submitted to the Board in due course.

ANNEXURE I.

THE PROGRAMME OF RESEARCH WORK FOR THE PERIOD OF THREE YEARS, *i.e.*, FROM 1ST MARCH 1940 TO 28TH FEBRUARY 1943.

First year (1940-1941).

1. *Gas Storage Investigations.*—The suitable range of concentration of carbon dioxide in the atmosphere for the storage of Alphonso mango at 48°F. and for Nagpur orange at 45°F. will be determined.

Alphonso mango of 'B' stage of maturity (green but mature) will be used. Fruit of this stage of maturity has been found suitable for cold storage. Nagpur oranges to be used for the experiment will be fully *mature*.

The concentrations of carbon dioxide will be 0 (Control), 5, 10, 15, and 20 per cent. These concentrations will be maintained by regulated ventilation. The fruit will be kept in specially prepared gas-tight containers. The carbon dioxide given off by the fruit will increase the concentration of this gas in the container. Regular analysis of the carbon dioxide content will be made and when the concentration of the gas is found to be higher than the required percentage, the container will be ventilated with a measured volume of air displaced from an aspirator bottle by means of water so as to maintain the required percentage of carbon dioxide.

The containers will he opened at the intervals of a fortnight and an examination of the fruit will be carried out. In the case of mango, a few raw fruits will be removed from the container and kept at 68°F. to see if they ripen properly.

2. (*a*) Cold storage trials of Khed potatoes from both the Rabi and Kharif crops will be carried out for comparison.

(*b*) Potatoes to be used as seed in the second year (1941-42) for the field trials will he stored at 35° and 40°F.

3. The economics of cold storage of mango, Nagpur orange, peas and cauliflower will be studied. For this purpose the cost of cold storage, the condition of the fruit or vegetables after cold storage from the market point of view and the possible price in the market will be investigated.

4. The cold storage trials of fruits and vegetables received from the provinces and States will be carried out.

Second year (1941-1942).

1. *Gas storage investigations.*—The optimum temperature for the storage of Alphonso mango and Nagpur orange at the concentration of carbon dioxide found suitable in the first year will be determined. For the Alphonso mango, temperatures of 45°, 48°, 52° and 55°F. and for the Nagpur orange, of 40°, 45°, 48° and 52°F., will be investigated.

2. (*a*) Comparative cold storage trials of seed potatoes freshly imported from Italy and the first year's crop of imported Italian seed will be carried out.

(*b*) The effect of the storage temperature on plant growth and yield of cold stored potato-seed will be investigated. The seed stored during the first year (1940-1941) will be used for this purpose. The field trials will be arranged by the Department of Agriculture, Bombay Province.

(*c*) Potatoes to be used as seed in the third year (1942-1943) for the field trials will be stored at 35°, 38°, and 40°F. Potatoes remain dormant at 35°F. and sprout at 40°F. in a few months. The effect of the intermediate temperature of 38°F. will be studied.

3. The economics of cold storage of bananas, potatoes and cabbage will be studied.

4. The cold storage trials of fruits and vegetables received from the Provinces and States will be carried out.

Third year (1942-1943).

1. *Gas storage investigations.*—The proper stage of maturity of Alphonso mango will be found out. Fruit of different stages of maturity will be stored at the optimum temperature and concentration of carbon dioxide determined in the first two years. The effect of temperatures lower than 40°F. will be studied in the case of oranges.

2. The study of the effect of the storage temperature on plant growth and yield of cold stored potato-seed will be continued. The seed stored in the second year will be used for this purpose.

3. The economics of cold storage of litchis, onions, carrots, beet-roots will be studied.

4.* The cold storage trials of fruits and vegetables received from the Provinces and States will be carried out.

---

*The names of fruits and vegetables on which the Provinces and States would like to carry out storage trials will be given when known in the detailed programme to be submitted every year. If there is any alteration in the programme as a result of the observations made during the course of these investigations the change will be shown in the yearly programme.

ANNEXURE II.

COPY OF LETTER TO THE SECRETARY TO THE GOVERNMENT OF BOMBAY, REVENUE DEPARTMENT, BOMBAY CASTLE, NO. F. 52-(9)|39-A.I., DATED NEW DELHI, THE 11TH OCTOBER 1939.

I am directed to refer to your letter No. 4369-A.|28, dated the 5th September 1939, and to suggest the following for the consideration of the Provincial Government :—

The technical programme has been prepared on the basis of three years extension as recommended by the Advisory Board whereas, as already intimated, the scheme has now been sanctioned by the Governing Body only for two years, *i.e.*, up to 31st March 1942. The programme, therefore, perhaps requires to be revised so as to have it completed within the sanctioned period of two years and a month. In order to carry out the gas storage investigations on the mango and the orange within these two years studies on concentration of carbon-dioxide and on temperatures should both be carried out simultaneously. It is considered that two temperatures and two concentrations for each crop will meet the case. The question of proper stage of maturity at which the Alphonso mango should be taken up is important and, if possible, should be studied along with the investigation of different temperatures in the second year.

Considering that the cold storage of potatoes has been thoroughly dealt with in the United Provinces and to a fair extent at the Ganeshkhind station it does not seem necessary to undertake further work in this crop. There is also no necessity to carry out gas storage investigations on potatoes.

It is also considered that the economics of cold storage cannot be tested on a small scale plant. What is required from the small plant is purely technical information.

It should also be stated clearly as to what exactly is proposed to be done on bananas, cabbages, litchis, onions, carrots, beet roots and fruits and vegetables received from Provinces and States. At the meeting of the Advisory Board, May 1939, it was emphasised that, unless a method was devised by which the fruit sent from other Provinces and States was saved from changes in transit, the experiments in cold storage trials at Ganeshkhind would not serve any useful purpose. The Council would like to know how this difficulty is going to be met.

It is suggested that the Government of Bombay may kindly have the programme revised in the light of the above remarks and also indicate whether the scheme is likely to obtain its object within the extended period.

2. The programme with the above remarks will be placed before the Advisory Board at its forthcoming meeting. If the revised programme is received sufficiently in time it will also be placed before the Board.

An early reply is requested.

APPENDIX VIII-A.

Supplementary Note on Subject No. 8 (a) :—Fruit Research—Technical *Programmes*—Bombay Scheme of Cold Storage Research.

In continuation of the note, dated the 4th October 1939, the revised programme received from the Government of Bombay is circulated (Annexure).

ANNEXURE.

COPY OF LETTER FROM THE SECRETARY TO THE GOVERNMENT OF BOMBAY, REVENUE DEPARTMENT, BOMBAY CASTLE, TO THE SECRETARY, IMPERIAL COUNCIL OF AGRICULTURAL RESEARCH, NEW DELHI, No. 4369-A.|28, DATED THE 22ND NOVEMBER 1939.

SUBJECT :—*Cold Storage Research Scheme.* Revised technical programme of research work.

With reference to your letter, No. F. 52-(9)|39-A.I., dated 11th October 1939, I am directed to forward for the approval of the Imperial Council of Agricultural Research a revised technical programme (Enclosure) in respect of the schemes prepared on the lines suggested by you.

2. Definite information as to what is exactly proposed to be done on bananas, cabbages, litchis, onions, carrots, etc., received from Provinces and States is required by the Imperial Council of Agricultural Research. I am directed to state in this connection that work on fruits and vegetables, other than potatoes, will be restricted to such materials as are received from the Provinces and States. Until it is made known what such materials are likely to be and the purposes for which storage experiments are to be conducted, it is not possible to furnish the information required by you at this stage. I am, therefore, to suggest that this fact may be brought to the notice of the Provinces and States so that their requirements in connection with the gas storage experiments on fruits and vegetables supplied by them may be communicated to this Government as soon as possible.

3. With regard to the transport of fruits and vegetables from other provinces for work under the Cold Storage Scheme at Poona special containers have already been devised with a view to minimizing the chances of changes in transport and these have already been successfully used. Details of the construction of such containers are given in the Progress Report of the scheme for 1936.

4. With regard to the last sentence of paragraph 1 of your letter, I am directed to state that the work of the revised technical programme may be carried out in two years but this will naturally depend on the demands made by other Provinces and States on the experimental facilities and staff.

ENCLOSURE.

THE PROGRAMME OF RESEARCH WORK FOR THE PERIOD OF EXTENSION FROM 1ST MARCH 1940 TO 31ST MARCH 1942.

First Year (1940-1941).

1. *Gas Storage investigations* :—

The suitable range of concentration of carbon dioxide in the atmosphere for the storage of Alphonso mango at 48°F., and for Nagpur orange at 45°F. will be determined.

Alphanso *mango of 'B' stage of maturity (green but mature)* will be used. Fruit of this stage of maturity has been found suitable for cold storage. Nagpur oranges to be used for the experiment will be fully mature.

The concentrations of carbon dioxide will be of (control), 5, 10, 15 and 20 per cent. The concentrations will be maintained by regulated ventilation. The fruit will be kept in specially prepared gas-tight containers. The carbon dioxide given off by the fruit will increase the concentration of this gas in the containers. Regular analyses of the carbon dioxide content will be made and when the concentration of the gas is found to be higher than the required percentage, the container will be ventilated with a measured volume of air displaced from an aspirator bottle by means of water so as to maintain the required percentage of carbon dioxide.

The containers will be opened at the intervals of a fortnight and an examination of the fruit will be carried out. In the case of mango, a *few* raw *fruits* will *be removed from the container* and kept at 68°F. to see if they ripen properly.

The cold storage trials of fruits and vegetables received from the Provinces and States will be carried out.

Second year (1941-1942).

1. Gas storage investigations :—

The optimum temperature for the storage of Alphonso mango and Nagpur orange at the concentration of carbon dioxide found suitable in the first year will be determined. For the Alphonso mango, temperatures of 48°F., 45°F., 52°F. and for the Nagpur orange of 35°F., 40°F. 45°F. and 52°F. will be investigated.

2. The proper stage of maturity of Alphonso mango will be found out. Fruit of different stages of maturity will be stored at the optimum concentration of carbon dioxide determined in the first year.

3. The cold storage trials of fruits and vegetables received from the Provinces and States will be carried out.

The names of fruits and vegetables on which the Provinces and States would like to carry out storage trials will be given when known in the detailed programme to be submitted every year. If there is any alteration in the programme as a result of the observations made during the course of these investigations the change will be shown in the yearly programme.

ANNEXURE IX.

Note on Subject No. 8 (b):—Fruit Research—Technical Programmes—Fruit Research Station, Sabour (Bihar).

A copy of a technical programme of work under the Scheme for the extension of the combined plains fruit research for the United Provinces and Bihar (Sabour) is attached for consideration (Annexure). The scheme was recommended for a period of three years by the Advisory Board at its meeting held in May 1939 but was sanctioned by the Governing Body only up to 31st March 1942.

2. The programme will first be considered by the Fruit Sub-Committee whose report will be submitted to the Board in due course.

ANNEXURE.

TECHNICAL PROGRAMME OF WORK FOR THE JOINT FRUIT RESEARCH SCHEME OF THE UNITED PROVINCES AND BIHAR FOR THE NEXT TWO YEARS.

I.—Study of alternate bearing in the mango.

II.—Studies on the vegetative propagation of mangoes and litchies.

III.—A study of varieties and sex in the Papayas.

IV.—Observational and Experimental work in the Orchard and Nurseries.

Detailed technical programme of work for the Joint Fruit Research Scheme of the United Provinces and Bihar for the next two years.

I.—STUDY OF ALTERNATE BEARING IN THE MANGO.

MORPHOLOGICAL.

(1) *Tree morphology in relation to the problem.* (*a*) The morphology and seasonal growth of shoots in the typically different varieties.

The different varieties of mangoes are not equally susceptible to the habit of alternate bearing and accordingly they appear to present characteristic morphological differences.* Thus varieties like *Langra* and *Bombai* which seem to be, by nature, alternate bearing flower only once a year further they have mostly pure panicles. *Fazli* shows an annual bearing tendency ; it has considerable mixed panicles. *Baramasia* flowers twice a year, almost all its panicles are mixed. Varieties like *Kallapadi* and *Mandafa* can flower even three times in a year. The object of this study is to elucidate the habit of growth and its relation to blossom formation in the different varieties.

A set of three trees of each of the above-named varieties have been used for this work. The trees are 5 to 7 years old and they are flowering and fruiting for the last two years. The individual shoots on the trees have been labelled with a view to follow their morphological habit and development in vegetative growth as well as in fruitfulness over a period of 3 to 4 years, by which time the alternate bearing varieties like *Langra* and *Bombai*, should develop the habit.

(*b*) How the shoots on an alternate bearing tree behave in the successive years.

To elucidate this, samples of shoots on mature trees which have been alternate bearing for some time, have been labelled. Seasonal growth and fruitfulness of these shoots in relation to the performances of the trees are being studied. The work has heen in progress since December 1937 (Ann. Rept., 1938-39), and it is proposed to conduct it for five years, from that date.

(2) *Fruit-bud differentiation* : To determine relationship *with seasonal growth* and the time of bud differentiation.

Growth appearing in the first flush (Jan.-Feb.-March) are labelled, their development followed, and from July, *i.e.*, about the time they cease elongation growth their tips (terminal buds) are sampled at intervals up to the time of bud break in the following season, for examination. The examination is made in microtome sections. The work is in progress ; preliminary results have been presented in 1938-39 Ann. Rept. of the station.

(3) *Floral biology with special reference to pollination, fertilization and fruit set.*

Number of blossoms formed and the percentage of these developing fruits determine the number of fruits borne by a tree in any particular year. In mango a very small percentage of tbe flowers produce fruits ; further, the different varieties show differences in this respect. The object of this study is to elucidate the factors governing pollination, fertilization and fruit set. It is also intended to investigate the possibilities of cross-pollination in mango. The work has been in progress for the last two years.

Time of flowering, percentage of staminate and bi-sexual flowers, dehiscense of anthers, viability of pollen, pollination, characteristic of the stigma fruit-set, effect of artificial self and cross pollination are being studied.

(4) *Development of the fruit, seed and embryo in relation to fruit drop, vegetative growth and fruit-bud differentiation.*

Samples of fruits are collected weekly beginning from the time of fruit-set till ripening ; increase in volume, length, breadth and weight of the fruit, seed and embryo are determined. The date on time of maximum fruit drop, tbe growth of vegetative shoots including immergence of laterals, their time of cessation of growth and finally how they behave in the following year, are also collected.

The work was started in 1938. Interesting preliminary results have been recorded in the 1938-39 Ann. Rept. of the station.

PHYSIOLOGICAL.

(1) *Seasonal metabolic changes in shoots and their relation ta growth and bud differentiation.*

Samples of shoots are taken at intervals during the season for determining their carbohydrate and nitrogen contents. Morphological notes in regard to growth and blossomming are taken on controls.

The work has been started in 1938 (Ann. Rept., 1938-39).

PROMOLOGICAL.

(1) *Effect of deblossoming and/or defruiting in an 'on' year on flowering in the following year.*

(2) *Thinning of flowers, fruits and/or shoots of young trees coming into maturity with a view to develop an annual bearing tendency.*

II.—VEGETATIVE PROPAGATION OF MANGO AND LITCHI.

(a) *Effect of growth promoting substances on rooting in mango and litchi cuttings.*

Using indole-acetic, indole butyric, phenyl-acetic and napthyl-acetic acids.

Work started in 1939.

(b) *To determine the apogamically developed embryos in polyembryonic mangoes, and later to investigate their value as vegetative stocks.* Work started in 1939.

(c) *Stock-Scion relationship in mango—to determine,*

(i) whether seedlings of seedling tree parentage (*i.e.*, grown from seedling tree fruits) have any advantage over those of grafted tree parentage, as stocks ; and

(ii) whether stocks and scions belonging to the same variety are more compatible than those belonging to two different varieties.

Treatments :—

	1	2	3	4	5*	6*
Scion ..	Bombai.	Langra.	Fazli.	Zardalu.	S. 12.	S. 13.

Seedling stock :—

A.—*Parentage—Seedling tree (Bijoo).*

1. Bombai.
2. Langra.
3. Fazli.
4. Zardalu.

*5. S. 12.

*6. S. 13.

B.—*Parentage—Grafted tree.*

7. Bombai.
8. Langra.
9. Fazli.
10. Zardalu.

In all there will be 10 × 6 = 60 combinations.

Ten replicated inarchards of each combination will be made under uniform experimental conditions.

At the first instance their growth and development will be studied for three years.

The work has been started in 1939.

(*d*) *Mango budding.*

To determine the effects of stock, method of budding, stage of the bud-wood, stage of stock, moisture, temperature and time of the year on bud-take.

The work is in progress.

III.—THE PROBLEMS OF VARIETIES AND SEX IN PAPAYAS.

(1) *Continuous inbreeding in papayas.*—With a view to obtain pure lines. The breeding work has been taken up in the following three kinds of papayas :—

(*a*) Washington— a diœcious plant, with coloured (pink) nodes and petioles.

(*b*) Ranchi Mammoth—a diœcious plant.

(*c*) Ceylon long—a monoecious plant.

During the last two years, plants showing the typical characteristics of these three kinds of papayas were selected ; and plants have been raised from seeds of individual fruits collected from them. In the cases of the dioecious papayas a male and a female plant, raised from seeds of the same individual fruit, that most closely represent the characteristics of the kind are used as mates. In the case of the monecious papaya a single tree is used.

The first artificial pollination are being done this year, *i.e.*, 1939.

The inbreeding work is really a long time one but the immediate important results expected from these experiments are in developing a method of controlling seed production by artificial pollination under controlled conditions.

(2) *Morphological studies in papaya.*—(*a*) Parthenogenesis—it is reported that papaya can develop fruits without pollination, but no seed is formed and the fruits do not reach maximum size. The object of this study is to elucidate further the effects of ' pollination ' and ' no pollination ' on the development of fruits. The work is in progress.

(*b*) Observations on general morphological characteristics of the typically different kinds of papayas.

IV.—OBSERVATIONAL AND EXPERIMENTAL WORK IN THE ORCHARDS AND NURSERY.

(*a*) *Training of trees in the maiden orchard by judicial pruning.*

(*b*) *Effect of cultivation*—with a view to determine the optimum number and times of ploughing orchards.

The work is in progress, Ann. Rept., 1938-39.

(*c*) *Manurial Experiment.*—An experiment was laid out with the help of the Statistician of the Council and plantings made in 1937. Lay-out and records (*vide* 1936-37 Ann. Rept., page 11) :—

Lay-out :—

Plot area—each plot 72′ by 48′ contains 2 experimental and ten guard trees.

Total area—7·61 acres.

Replication—Six randomised blocks.

Treatments—N, P, K, NP, NK, PK, NPK and control.

Variety—Langra.

Stock—No. 19, an individual seedling mango tree.

Distance—24′ × 24′.

Date of planting—10th March 1937.

Records :—

(*a*) Growth—measurement of girth. height, spread and annual wood growth of individual plants.

(*b*) Records on yield, precocity, incidence of disease, size and keeping qualities of fruit of individual trees.

Manures :—

Sulphate of ammonia, superphosphate and sulphate of potash will be used. For humus well-rooted straw will be supplied to all the pots at a uniform rate.

(*d*) *Rejuvenation of old orchards*—by orchard thinning, dehorning and replacing of old trees.

The work has been begun in 1938-39 in accordance with the plan shown in 1937-38 Ann. Rept., Part II. page 58.

(*e*) *Identification and control of pests*—with the help of the specialists at the Imperial Agricultural Research Institute, New Delhi, and any competent authorities elsewhere.

(*f*) *Routine inarching, cleft grafting and layering of mango marcotting of litchi*—with a view to bring about improvement.

(*g*) *Collection of mango varieties*.—A collection of fifty-five important varieties have been made during the last five years (*i.e.*, between 1934 and 1939) ; addition will be made as new varieties of promise come across.

The aims in view are (1) introduction of new varieties, (2) observation on the growth habit of the different varieties with special reference to alternate bearing, and (3) a comparison of the varieties known by the same name in different localities.

(*h*) *Collection of litchi varieties*.—Eleven varieties of litchies have been collected with a view to make observation on their growth and performance.

*Ref. Ann. Rept. of the Fruit Research Station, Sabour, 1938-39.

ANNEXURE X.

Note on Subject No. 8 (c):—Fruit Research—Technical Programmes—Hill Fruit Research Scheme, Chaubattia (U. P.).

A copy of a technical programme of work under the Scheme for the extension of the hill fruit research for the United Provinces is attached for consideration (Annexure). The scheme was recommended for a period of four years by the Advisory Board at its meeting held in May 1939 but was sanctioned by the Governing Body only up to 31st March 1942.

2. The programme will first be considered by the Fruit Sub-Committee and the Soil Science Committee whose reports will be submitted to the Board in due course.

ANNEXURE.

TECHNICAL PROGRAMME OF WORK FOR THE EXTENDED PERIOD OF THE HILL FRUIT RESEARCH SCHEME, CHAUBATTIA (U. P.).

A. HORTICULTURAL SECTION.

I.—*Field experiments already laid out.*

1. *Apple stock trial.*—The work so far conducted on stocks has chiefly consisted of collection and selection. Twenty two stocks both local and foreign were collected and their behaviour in the nursery as to the ease with which they propagate, their bud-taking propensities, their root systems, and their freedom from insect pests and diseases were studied. Based on these observations six stocks, *viz.*, Crab C, Malling type XIII, Malling type II, Merton 779, Merton 793 and Local selection I, which showed indications of proving satisfactory in Kumaun conditions were selected. A randomised experiment, to test the effect of these six stocks on the scions, has been laid out. To ensure proper pollination it was considered desirable to have more than one scion variety in the experiment. Accordingly three scion varieties, *viz.*, Delicious, Jonathan and Rymer which flower at the same time and which are known to be good pollinators for one another were included. With the six stocks and the three scion varieties, a split plot layout was followed. As finally approved by the Statiscian, I. C. A. R., the layout was as follows :—

The whole area under the experiment was divided into ten blocks. In each block the three scion varieties were randomised first and the six stocks were then randomised within each scion-variety sub-block, with one tree as the unit of a plot. It was considered at that time that the increased replications and the better distribution of the stocks over the ground would greatly outweigh and advantage of increasing the unit, when one tree as unit of a plot in a standard material, such as we used for our experiment, bas been proved to he adequate for giving a valid estimate of error.

The planting was done in November 1937 and records on their growth have been maintained so far on the lines suggested by the special sub-committee of the I. C. A. R. appointed to examine the question of standardisation of records and layouts and co-ordination of fruit experiments. The work during the extended period of the scheme will consist of the collection

of data on the standard Record Forms of performance of tree fruits, recommended by the above sub-committee and analysing them with a view to see if there is any effect of the stocks on the growth and fruit bearing capacity of the trees.

2. *Apple varietal trial.*—About 20 varieties of apple have been imported since 1934 and planted out in the orchard for observation. In the meanwhile, based on the observations on the old existing varieties here, a varietal trial, consisting of ten varieties, *viz.*, Early Shanbury, Rome Beauty, Beauty of Bath, Esopus Spitzenberg, Jonathan, Delicious, Cox's Orange Pippin, King of the Pippins, Summer Golden Pippin and Gravenstein Rouge, which include early, midseason and late varieties, has been laid out to elicit definite information upon their comparative economic value.

The experiment had to be divided into 2 sets due to the requisite number of plants not being available for planting out in one season. The layout of this trial, therefore, as finally approved by the Statistician, I. C. A. R., was as follows :—

The whole experiment was divided into two groups (*a*) and (*b*).

Group (*a*) consisted of the first six varieties, each on two stocks, *viz.*, Malling type XIII and Crab C. This group was planted in November 1937 on a split-plot system randomising the stocks first in each block and then randomising the scion-varieties, within each stock-sub-block with one tree as the unit of a plot and five replications.

Group (*b*) consisted of the last four varieties with one variety from the Group (*a*), *viz.*, Early Shanbury to serve as the connecting link for the analysis of the data obtained in future. These five varieties on only one stock, *viz.*, Crab C were planted in November 1938, with a randomised-block-layout with one tree as the unit of a plot and ten replications.

Growth records on the lines suggested by the special sub-committee have been maintained so far. The work in future will consist of the collection of data on the growth and bearing capacities of individual trees on the same lines and placing the varieties in order of their economic importance.

3. *Rejuvenation or renovation of old orchards.*—This work has been divided into two parts :—

(*a*) *Renovation of existing old trees.*—Although a small scale experiment on old peach trees with heading back and application of different manures has already shown some results, this method on old apple trees did not prove promising. It was therefore decided to try inarching vigorous root stocks to the tree trunks of old apple trees in order to supplement and eventually largely replace the existing root system, as a means of renovating them.

Ten trees of variety Claygate Pearmain and ten of Winter Banana were selected. Each tree was divided into four approximately equal portions and the main branches of three such portions were inarched each with one of the following three stocks :—

(1) Crab C.

(2) Malling Type XIII.

(3) Local I.

One portion was left ungrafted to serve as control.

It has been shown by Joan Hearman* and others that the main effect of the inarching is shown by those particular branches of the trees which are in direct vascular connection with the root-stock. They may, therefore, be used for comparison for estimating the effect of the stocks and of inarching. The four treatments (three stocks and one control) were randomised for each tree, so that a tree formed a block and its four portions the four plots. Thus, there are ten replications in Winter Banana and the same in Claygate Pearmain.

During the extended period the scheme records on the growth and crop production on the standard lines suggested by the special sub-committee will be kept up for individual portions of individual trees. In view of the variation in size from branch to branch, causing variation in the size of the different portions from the same tree, it was decided to measure the length of the old wood in each portion before the grafting was done. The data of growth and fruit production now obtained will be reduced to per unit length of the old wood for the purposes of analysis.

(*b*) *Renovation of old orchards by different methods of replanting them.*—This experiment seeks to give information on the merits of different methods of replanting an old orchard when the trees therein have passed the renovation stage. A system of interplanting between existing old trees, the latter to be removed when the former attain the bearing age is being tried against removing the old trees altogether and planting afresh.

As finally approved by the Statistician, I. C. A. R., the layout of the experiment was as follows :—

Four old blocks one each of Apple, Peach, Plum and Apricot were selected. These four blocks gave four sets to compare ' Interplanting ' against ' Clearing and Planting '. Each block was interplanted, and cleared and planted with the same type of fruit crop that was in existence there. Thus the old apple block received the two types of plantings, with young apple plants of apple variety ' Delicious ', old peach block with those of peach variety ' Alexander ', plum with those of plum variety ' First ' and apricot with those of apricot variety ' New Large Early '.

The two treatments, *viz.*, (*i*) Interplanting, and (*ii*) Clearing and planting, were randomised in each set with 4 replications and eight trees as the unit of a plot.

The planting was done in November 1938 and during the extension period records on standard lines will be kept up for individual trees and summarised to arrive at definite conclusions.

4. *Best kinds of fruit for various soils.*—This can at best be an observation trial. Based on the Research Assistant Chemist's soil survey of the orchard three typical areas of Light, Medium and Heavy soils were selected. In each area the following kinds of fruit trees were planted :—

Apples (Variety Delicious).
Peaches (Variety Alexander).
Cherries (Variety Bedford Profilic).
Plums (Variety Combination) and
Apricots (Variety St. Ambroise).

Each area was divided into six blocks and the above kinds of fruit trees were randomised in each block with three trees as the unit of a plot.

'The reinvigoration of apple trees' Jour. of Pomology, Vol. XIV, No. 4.

The planting was done in November 1938.

The work during the extension period will consist of the collection of data on standard lines with regard to the performance of individual trees, with a view to gaining some information about the suitability of different soils to the different kinds of fruit trees.

5. *Trial of different kinds of fruits in old blocks of different kinds.*—This can also only be an observational trial.

Five old blocks, one each of apple, peach, cherry, plum and apricot, were selected. In each of the above blocks the following five kinds of fruit trees were planted :—

Apple (Variety Delicious).
Peach (Variety Alexander).
Cherry (Variety Governor Wood).
Plum (Variety First), and
Apricot (Variety Kaisa).

The layout for each old block was on the 'Randomised block system' with six replications and three trees as the unit of a plot.

Planting was done in November 1938 and the future work in this case also will consist of the collection of data on standard lines.

II.—*Field experiments to be laid out.*

6. *Trial of Catch Crops to make young orchards pay.*—This experiment is devoted primarily to trying out different catch crops as a means of making young orchards pay before the fruit trees come into bearing. Later on the trees used in this plantation can be utilized for other experiments such as bark-ringing and spraying, etc.

As now approved by the Agricultural Commissioner to the Government of India the following catch crops will be tried. (*i*) Potatoes, (*ii*) Chillies, (*iii*) Soya beans and (*iv*) Sawan and Raddish in rotation. These four together with the control (no catch crop) will form the five main treatments.

Two varieties of apple, *viz.*, Delicious (late and vigorous) and Beauty of Bath (Early and less vigorous) on Malling type II root-stock and one variety of peach, *viz.*, Alexander on Prunus divaricata stock, are being planted up in this experiment with a view to determine the effect of the different catch crops on the vigour and precocity of the trees and also to determine if there is any differential effect of the various catch crops on early and late ; vigorous and non-vigourous varieties of apple as also on the two kinds of fruit trees, *viz.*, Apple and Peach.

The layout of the experiment as approved by the Statistician, I. C. A. R., is of the split-plot type. The five treatments of catch crops are randomised first in a block and then the three kinds of fruit trees, *viz.*, two varieties of apple on Malling type II stock and one of peach and Prunus divaricata stock, are randomised within a plot. There are four replications. The detailed layout is shown in plan B.

This experiment is to go in a virgin land. The area is being got ready. Necessary plants have been propagated and it is hoped to finish the planting by the end of this year.

Future observations on the same lines as for the other experiments will be made during the extended period of the scheme.

7. *Manurial trial on apple.*—The aim of this experiment is to find out the effect of Nitrogen, phosphoric acid and potash singly and in combination and of their various interactions on the vigour and cropping of apple trees.

As this experiment is going to be laid out in a virgin forest land, it is expected that there will be no deficiency of organic matter in the soil, at least for a few years to come. To start with it is, therefore, intended to narrow the issue by confining attention to the three main constituents (Nitrogen, potash and phosphate) applied in artificial form. These three constituents will be applied in all possible combinations. There will thus be eight treatments including control as shown under :—

(1) No manure (Control).
(2) Nitrogen alone.
(3) Potash alone.
(4) Phosphate alone.
(5) Nitrogen and potash.
(6) Nitrogen and phosphate.
(7) Potash and phosphate.
(8) Nitrogen, potash and phosphate.

The fertilizers used will be sulphate of ammonia, sulphate of potash and superphosphate, applied at Standard rates, *viz.*, 5.5 lbs. of sulphate of ammonia, 1.25 lbs. of sulphate of potash and 4.5 lbs. of Superphosphate per tree. Half the suggested dose will be given in the first year, three quarters in the second year and full dose from third year onwards.

A basal dressing of lime (the dose of which will be fixed as the soils of this area are analysed by the R. A. Soil Chemist in regard to the lime requirement) is suggested, as that would ensure elimination of all disturbing factors due to soil acidity and will further render possible correct interpreparation of the interactions between N $\times$ P $\times$ K. If for instance lime is not applied as basal dressing to this extremely acid soil, it will be difficult to attribute the effect of P_2O_5 exclusively to Superphosphate added, since the latter contains lime along with phosphoric acid. With a basal dressing of lime there should be no difficulty in using sulphate of ammonia.

Since it is possible that there might be a differential response of apple root stocks to the artificials applied it is proposed to include four root stocks in this experiment. They will be Malling type XIII, Malling type II, Merton 779 and Merton 793. This selection embraces the vigorous and semi-dwarfing types of root-stocks and also those immune and susceptible to woolly aphis. It is hoped that by the use of these 4 stocks fuller information will be obtainable from this experiment.

The scion variety grafted on to these stocks will he ' Delicious ' *Layout* :—In order to have 6 trees as the unit of a plot, and at the same time confine this experiment to the material and land available for the purpose, a confounded layout has been drawn up by the Statistician, I. C. A. R. It is shown in detail in the attached plan A. Six trees have been kept as the unit of a plot and only a single degree of freedom of the four factor interaction has been confounded. According to this layout there will be 192 experimental trees and 233 trees for guard rows. The latter will consist of trees of the variety Jonathan on Malling type II root stock.

The material and land are being got ready and it is hoped to finish the planting by the end of this year. Future observations on the lines as for

the other experimental trees will be kept up during the life time of the scheme.

8. *Combined pruning and mulching experiment.*—The aim of this experiment will be to find out a means of minimising the damage to apple fruits due to hail storms which are very common in Kumaun in April and May just after the fruit has set, and also to determine the effect of mulching on the fruit crop during the dry months. ' Pyramid system ' of pruning in which the fruits are sheltered by leaves and twigs is, therefore, intended to be tried against the ' Vase system ' of pruning which is the common system employed in Kumaun at present.

The most easily available materials for mulching in these hills are pine needles and oak and other forest leaves. As pine needles are comparatively harder and take a longer time to rot than oak and other leaves, it is possible that the two might have different effects as mulching materials. It is, therefore, intended to try the two types of the material separately. These with one control (no mulching) will, therefore, form the three main treatments of the experiment and the above two pruning treatments, *viz.*, Pyramid system and Vase system will be superimposed on each of these.

As it is possible that mulching might have a differential effect on the scion variety according to whether it is on a shallow rooted or a deep rooted root-stock, it is proposed to have one scion variety, *viz.*, Delicious on two root stocks, *viz.*, Crab C (deep rooted) and Malling type II (Shallow rooted) in this experiment. The treatments, therefore, will be 2 stocks × I scion × 3 mulchings × 2 prunings.

The layout as finally approved by the Statistician, I. C. A. R., now stands as follows :—

The three mulchings as whole plot treatments are first randomised in a block. Under each mulching the four treatments (2 prunings × 2 stocks) are then randomised as sub-plot treatments with 6 tree as the unit of a sub-plot. There will be three replications. The attached plan C shows the layout in detail.

The planting for this experiment will also be completed by the end of this year and observations on these trees on standard lines will be kept up during the course of the scheme.

9. *Walnut varietal trial.*—Some parts of Kumaun are absolutely cut off due to transport difficulties. Although such areas are quite capable of producing first class desert fruits it will not be a paying proposition to grow perishable fruits there unless the means of transport are more developed. Nuts, especially Walnut and Chestnut, which seem to do quite well here if developed in those areas might be of great economic value to the orchardists inasmuch as they can be stored and transported easily without the fear of their being spoiled during transit. The Walnuts which are at present grown at these places are of seedling origin. No attempt has yet been made to find out the best varieties, suitable to Kumaun. It is, therefore, proposed to carry out a Walnut varietal trial at this station with grafted walnut varieties.

The following ten varieties were recommended by the East Malling Research Station as being the most likely to succeed here :—Eranquette, Mayette, Meylanaise, Champion of Ixworth, Stutton seedling, Lady Irene, Northdown Clawnut, Secrett, Chisenbury Priory and San Jose Mayette.

It is proposed to include all these ten varieties in this experiment. The layout will be on a randomised block system with 6 trees as the unit of a plot and 6 replications.

About 12 acres of virgin forest land have been acquired from the Forest Department for this purpose. It is hoped to have this land and the material required ready for planting out by the end of 1940.

Records on the vegetative growth and crop production and also on the cost of production and their market values will be kept up in subsequent years on the lines suggested by the special sub-committee of the I. C. A. R.

III.—*Propagation Experiments.*

These experiments will go on from year to year and will have to be modified constantly in view of the experience gained in previous years. No definite layouts can, therefore, be given with regard to them at this moment.

10. *Trial of different methods of scion working.*—The following methods of scion-working were tried in 1937-38 :—

(*i*) Budding with wood in May.
(*ii*) Budding without wood in May.
(*iii*) Budding with wood in September.
(*iv*) Budding without wood in September.
(*v*) Tongue grafting in March with grafting clay as the sealing material.
(*vi*) Tongue grafting in March with grafting wax as the sealing material.

The observations revealed that budding in September either with wood or without wood and grafting in March, with wax as the sealing material, were the two best methods of propagating the apple. The experiment is being continued on the same lines in 1938-39 for confirmation. It is, intended, in 1939-40, to include March budding also both on old and young stocks in this experiment.

11. *Raising stocks from cuttings.*—Attempts will be continued to raise apple root-stocks from cuttings. Both hard wood and soft wood cuttings will be tried. The following plant Harmones both as acqueous-alcoholic solutions and as paints mixed with lanoline are being tried at present :—

(*i*) B Indol acetic acid.
(*ii*) B Indol Butyric acid.
(*iii*) B Indol propionic acid.
(*iv*) Scatole.
(*v*) L and B naphthaline acetic acid.

The treatments and methods of application might have to be altered in future years in view of the results obtained from the present trial.

12. *Inducing shy rooting stooled and layered plants to throw out more roots.*—Some root-stock although apparently good, seem to be very reluctant to throw out roots in stool and layer beds. Different methods such as bark ringing, bark ringing and application of lanoline, wire ringing and incising the wood will be tried to induce them to root.

IV.—*Cultural experiments.*

These too will have to be modified from year to year in view of the experience gained in the past.

13. ***Thinning experiments.***—Three years' experience on thinning has showed that thinning increases the size and colour of apple fruits without

materially affecting the crop. No data on the effect of the time of thinning on the crop have yet been obtained. Future experiments will seek to gather this information.

14. *Bark ringing experiment.*—This has shown that ringing helps in the production of more flowers and fruit from apple trees which should normally bear fruits but which are not doing so probably due to excessive vegetative growth. The best time of ringing and the best methods have still to be ascertained and these will constitute the future course of study in this connection.

15. *Frame working of fruit trees as a means of superimposing a good market variety on unprofitable trees.*—The various methods of frame working brought out in other countries consist mainly of two types of grafting, *viz.* :—

(*i*) Bark grafting.

(*ii*) Wood grafting.

Preliminary experiments carried out at this station in 1936 showed that the various methods of wood grafting were more successful than bark grafting. An experiment has been laid out to test the comparative merits of the common method of ' Top working ' and of ' Frame working ' and also to ascertain the best time for performing the operations.

Forty uniform trees of variety Norfolk Beefing have been selected for being frame-worked and the variety Delicious has been used as the scion. Two times of grafting have been tried, *viz.*, August and March. The experiment is laid out on a split-plot system. The two times of grafting are first randomised in a block and the two types of working, *viz.*, ' Top working ' and ' Frame working ' are then randomised within each grafting-time-sub-block with 2 trees as the unit and five replications. The operations were finished in March 1939. It now remains to take observations on these trees in future years.

16. *Electro-cultural experiment.*—In view of the increasing popularity of applying electro-cultural treatments to fruit trees in various parts of the provinces, it was proposed to lay out a properly replicated trial at this station to determine the effects of various electro-cultural treatments on fruit trees. It has been considered advisable to have two sets in this experiment, one on old grown up bearing trees which do not normally receive any irrigation water and the second on young nursery plants which generally receive more attention in the way of watering, etc.

Only three treatments could be included in the first set :—

(*i*) Simple jacketting.

(*ii*) Jacketting and sparking.

(*iii*) Control (untreated).

Eighteen trees of the apple variety—Benoni—have been divided into six blocks of three trees each and the above three treatments randomised in each block with one tree as the unit of a plot.

Jacketting consists of providing the tree with a jacket formed of galvanised iron wire netting having a mesh of one inch. A strip of such wire netting 6 in. in width has been wrapped tightly round the trunk of the tree at the base after having removed the earth for that purpose, so that the wire netting touches the roots also. After the operation the soil has been replaced.

Jacketting and sparking has consisted of jacketting as above and sparking the jacket twice every week by means of an old magneto. One terminal is attached to the netting and the other is held close to it at a distance of about ⅛ inch, so that the spark springs across and is kept going all the time for 2 minutes.

One year's observations has shown no difference between any of the treatments. They will, however, continue for one or two years more to be definite about any deductions.

The second set is laid out on small one year old plants of apple-stocks, Malling type II in pots. Here, treatments requiring watering are also included. There are 3 main treatments and four sub-treatments :—

Main treatments.

1. Jacketting.
2. Jacketting and sparking.
3. Control.

Sub-treatments.

1. Irrigated with sparked water.
2. Irrigated with ordinary water.
3. Agaskarised.
4. Drenched with ordinary water.

It is a split-plot layout with the above treatments and 5 plants as the unit, replicated four times.

Soil and watering, etc., in the pots has been kept uniform. The weight of individual pot with plants in, was recorded at the start. Their weight at the end of the growing season will supply the necessary data to determine the effect of treatments on their vigour.

Jacketting has been done as in the first set. Sparking is given every alternate day for 2 minutes to each plant so treated. Agaskarisation and irrigation with sparked water is done by water which has been sparked for 2 minutes.

The treatments on this set also might have to be continued for one or two years more to arrive at any definite conclusions.

V.—*Storage of Fruits and allied experiments.*

17. *Storage of apple fruits.*—A lot of information on the best methods of storage, best wrappers to be used and the effect of size on the storage life of fruits has already been obtained in this connection. It now remains to evolve a cheap and effective storage room to determine the best time of picking for storage and to determine the effect of thinning and of various manurial constituents on the storage life of fruits. These will form the subject-matter of future study in this connection. The layouts of the trials will vary from year to year according to the material available. So they cannot be given here.

18. *Shipping and travelling qualities of apple varieties.*—Such informations about the old apple varieties are already in possession. New varieties such as Ruby Gem, Red June, Langley pippin and Thorle pippin will now be tried with regard to the above qualities. As these varieties come into bearing, cases of their fruits will be sent to the Imperial Marketting staff, Provincial Marketting staff and the Horticulturist to Bombay Government for report on their condition on arrival and on the length of time they remain fit for use after arrival.

PLAN A.

Plan for Stocks × Scion × Manures Experiment.

$\frac{a}{1}, \frac{a}{2}, \frac{a}{3}, \frac{a}{4}$: — Stocks   n, p, k :—Manurial treatments.

Sub-block I.		Sub-block II.	
$\frac{a}{1}$ k	$\frac{a}{3}$ p k	$\frac{a}{4}$ n p k	$\frac{a}{2}$
$\frac{a}{2}$ p	$\frac{a}{2}$ n	$\frac{a}{1}$	$\frac{a}{1}$ n k
a u k	$\frac{a}{1}$ n	$\frac{a}{3}$ k	$\frac{a}{1}$ p k
$\frac{a}{2}$ n p k	$\frac{a}{2}$ k	$\frac{a}{2}$ n p	$\frac{a}{2}$ n k
$\frac{a}{3}$ n k	$\frac{a}{4}$	$\frac{a}{3}$ n p k	$\frac{a}{4}$ k
$\frac{a}{1}$ p	$\frac{a}{3}$	$\frac{a}{2}$ p k	$\frac{a}{3}$ n
$\frac{a}{3}$ n p	$\frac{a}{1}$ n p k	$\frac{a}{3}$ k	$\frac{a}{4}$ n
$\frac{a}{4}$ p k	$\frac{a}{4}$ n p	$\frac{a}{3}$ p	$\frac{a}{4}$ p

One degree of Freedom confounded :—

$$\left(\frac{a}{1}+\frac{a}{2}-\frac{a}{3}-\frac{a}{4}\right) \times (\text{N P K})$$

Analysis of Variance :—

Due to	*D. F.*
Blocks (confounded four-factor interaction)	1
N	1
P	1
K	1
NP	1
NK	1
PK	1
NPK	1
Stocks	3
Two-factor interactions	9
Remainder	11
Total ..	31

PLAN B.

PLAN SHOWING THE LAYOUT OF CATCH CROP TRIAL.

N O P D	O N P C	P N O A	O P N E	N P O B
P N O B	N P O A	P O N C	N O P D	D N O E
N P O C	P O N D	N O P E	P N O B	N P O A
O P N E	O P N B	O P N D	N P O A	P O N C

N = Beauty of Bath } On Stock II.
O = *Delicious* }

P = Peach Alexander on Prunus divericata.

— Denotes block boundry.

.... Denotes sub-block boundry.

A = Soya bean.

B = *Potatoes.*

C = Chillies.

D = Saws and Raddish in rotation.

E = Control.

PLAN C.

Combined Pruning and Mulching Experiment.

PB 1	PA 1	PB 2	PA 2	NB 1	NA 2	NB 2	NA 1
OA 1	OB 1	OA 2	OB 2	PB 1	PA 1	PA 2	PB 2
NB 2	NA 1	NA 2	NB 1	OA 1	OB 2	OA 2	OB 1
OA 2	OB 2	OA 1	OB 1				
PB 2	PA 2	PA 1	PB 1				
NA 2	NB 1	NA 1	NB 2				

P = Mulching with Pine needles

O = Mulching with Oak and other Forest leaves.

N = No mulching.

A = Vase shaped pruning.

B = Pyramid shaped pruning.

1 = Stock crab C.

2 = *Stock M Type II.*

Scion variety Delicious is common to all.

B.—The Soil Chemistry Section.

1. *Soil Survey.*—A collated report on the present position of soil survey work at the Government Fruit Research Station, Chaubattia was discussed by the Soil Committee of Imperial Council of Agricultural Research. It was pointed out that in order to utilise properly the information obtained, a survey of the orchard at 50 feet apart was necessary. It was, however, felt that this work need not be as detailed as the 200 feet and 100 feet surveys, and consequently it was decided to complete the 50 feet survey work within six months by confining attention primarily to the visual and textural characters of the horizons in individual profiles. This work will be completed by April 1940.

The results obtained so far indicate the development of four Genetic types of soils under the climatic and pedological conditions of Kumaun, *viz.*, Grey brown forest soils, Podsols, Wiesenboden or Meadow soils and red loams.

All textural subgroups of the first two genetic types were found to occur at the Government Fruit Research Station, Chaubattia, but neither Wiesenboden nor red loam formation could be studied properly as they do not generally occur under the topographical conditions of the locality. These two types will be studied in detail at Ramgarh and Garhwal where the topography favours the formation of such types. At Someswar too there are some places where the soils have been formed from Calcareous rocks. These soils will be analysed in detail so that information could be obtained for all textural grades of these soils together with their suitability for growing different kinds of fruit trees usually grown under the Kumaon conditions. After studying these places a soil map for the whole of Kumaon will be prepared, depicting soil types in their relation to the development of temperate fruit trees. There are about a hundred commercial orchards in Kumaon, and detailed survey of soils of these orchards need not be done. A few pits, say, 100 pits per every 100 acres from dissimilar topographical conditions will be studied *in situ*, and after analysing few representative samples a textural soil map will be made of the surveyed orchard.

Representative samples from each orchard will be analysed for the following :—

(*a*) *Chemical.*—Total and available P_2O_5 and K_2O, lime, nitrogen, moisture, loss on ignition and carbon.

(*b*) *Mechanical.*—Coarse sand, fine sand, silt and clay.

(*c*) *Physico-chemical.*—Ph, lime requirement, water holding capacity and water equivalent.

The analytical methods will remain the same as hitherto followed.

As a useful supplement to the data collected in the commercial orchards, the soil-forming rocks will also be analysed in order to understand all possible development of the soils under varied cultural conditions. Elements such as Boron have been found to have a very great effect on fruit development and, therefore, the content of minor elements in rocks should be determined. This is quite important as not only corky-core has been reported from various orchards but also definite symptoms of Boron toxicity has been observed at others.

II. ***Ph determinations of soils.***—At the suggestion of Sir Bryce Burt determination of pH values of all soils from three depths for all pits dug up for new plantations has been undertaken. So far the pH values of a total of 956 out of 2,120 samples have been determined. New plantations for manurial trial, mulching and pruning, and catch crops experiments will be planted out this winter, and consequently the number of samples for pH determinations will increase. It is also proposed to classify visually all soils obtained for pH determinations so that we would know the conditions of soil round every tree planted henceforward. These data can be utilized when these newly planted trees come into bearing.

III. Bench terraces are the only means of utilizing steep hill slopes of the Kumaun. As such it is very often necessary to cut away some soils in the terracing operations resulting in over-enrichment of certain horizons and absolute impoverishment of others. Thus every terrace as a unit has its own nutrient requirement. Determination of nutrient requirement of every terrace being out of the question, leaf diagnosis seems to be the only other means of judging the nutrient requirement of different terraces. For instance, as a result of analysis of a very large number of leaves, we have found that yellowing and premature falling of leaves is partly due to nitrogen deficiencies. Work in this line will be continued, and if possible, pot culture work will be undertaken to study the relationship, if any, between vegetative characters and nutrient deficiencies. Under conditions of extreme soil heterogenity such as found in the hills, this type of work is very necessary. Leaves, shoots and fruits will be analysed, along with soils by standard methods, of all physiologically deficient plants, and the findings will be confirmed by pot culture experiments.

IV. Organic manures such as farm yard and manure, compost, leaf-mould, etc., are very variable in their compositions. Then these are utilized for experimental works, analytical data in regard to their nutrient contents become obviously necessary and, as before, this work will also form a part of the regular programme of the soil chemistry section.

V. Mixed farming not being possible in the commercial orchards other means of enriching soil humus has got to be looked for. Leaf-mould is being sparingly used and the quantity available is not at any time commensurate with the demand. Attempts are now being made at the Government Orchard, Chaubattia to find out suitable methods for composting pine needles which are a very huge forest waste in these parts. Various composting methods such as heap method, pit method, Indore method with different quantities of green material are being tried. After this preliminary work is complete a suitable method will be evolved. It has been found that pine needles resist decomposition due to their resin content.

VI. Any other analytical work which may require a preliminary study will be undertaken.

Entomological Section.

(For 5 years from 10th July 1939.)

Life histories and seasonal incidence of all the major fruit pests have been studied during the last five years and control measures, mostly on laboratory scale, against the important pests were also tried. It is intended to devote the next five years exclusively to large scale control measures against all the pests of economic importance.

1. *Apple-root borer* (*Loposternus hugelii*).—It is the most serious pest of Kumaun. Its life-history and responses of the larva to environmental conditions have been studied in detail. On the basis of the information gathered so far, it seems very unlikely to control the pest by means of light traps as mostly males are attracted to light. Digging and hoeing the ground at the time of egg-laying or hatching have been found to be ineffective in destroying either the eggs or the newly hatched grubs.

(*i*) *Control of the pest by means of soil fumigants.*—From the observations made it seems possible to control it by applying a suitable soil fumigant such as paradichlorobenzine around the base of the tree every year at hatching time. Laboratory experiments have shown that P. D. B. if applied at the rate of one oz. per linear foot to a depth of 3″ in the ground, is effective upto about 6″ on either side in killing the newly hatched grubs. On this basis, a large scale control experiment with soil fumigants was laid out at Chaubattia orchard in the year 1937. The effects of the treatment are due for final examination in the autumn of 1940 owing to the fact that the borer usually live in larval stage for about 4 years. The lay-out of the experiment is briefly given below :—

Five patches of dry land were selected in the orchard and these formed 5 blocks. 20 medium sized trees from each block were selected and the 5 treatments randomised in them with 4 trees as the unit.

1. P. D. B. 1 oz. per running foot to a depth of 3″ in circle 6″ around the collar.
2. P. D. B. 1½ oz. per running foot to a depth of 3″ in circle 6″ around the collar.
3. C. S_2. ½ oz. per running foot to a depth of 3″ in circle 6″ around the collar.
4. C. S_2 ¾ oz. per running foot to a depth of 3″ in circle 6″ around the collar.
5. Untreated control.

20 newly hatched grubs are liberated near the roots of each of the 100 trees every year and the fumigants are being applied at the hatching time each year.

It has been discovered subsequently that trees on vegetatively raised stocks, especially the young ones, cannot tolerate the dosages like the trees of the same age on seedling stocks, owing to the fact that the former have no tap roots. As in future we are going to recommend the use of only disease resistant stocks and these can only be propagated vegetatively, it has become necessary to find out the maximum dosages that the trees of different ages on vegetatively raised stocks can tolerate in different types of soils. It has been established that the first attack of the borer starts only near the collar of the tree and so we can reduce the minimum effective dose required for each tree by applying the fumigant nearer to the base. With these objects in view, it is proposed to lay out a large scale experiment in the orchard in autumn of 1939. Three patches of about ¼ acre each will be selected from the 3 different types of soils namely clayey, loamy and sandy and the 7 treatments mentioned below randomised in each with 3 trees as the unit, replicated 4 times will be given. One year old plants of uniform size and vigour will be selected from stool and layer beds and planted 12 ft. apart from each other in December 1939. The fumigant will be applied

in July 1910 for the first time and thereafter the treatment will be repeated at the hatching time for the next 5 years. The 7 treatments for the first year will be :—

1. P. D. B. 1/10 oz. per plant to a depth of 3″ in circle 3″ around to collar.
2. P. D. B. 1/8 oz. per plant to a depth of 3″ in circle 3″ around to collar.
3. P. D. B. 1/6 oz. per plant to a depth of 3″ in circle 3″ around to collar.
4. P. D. B. 1/4 oz. per plant to a depth of 3″ in circle 3″ around to collar.
5. P. D. B. 3/8 oz. per plant to a depth of 3″ in circle 3″ around to collar.
6. P. D. B. 1/2 oz. per plant to a depth of 3″ in circle 3″ around to collar.
7. Control (Untreated).

20 newly hatched grubs will be liberated near the base of each plant a few days after the application of the fumigant. The adverse effect of the fumigant upon the plants will be noticeable in September 1940 and the roots will be examined in the autumn of the same year to see which of the different dosages are effective against the young grubs. On the basis of the information gathered from the first year's observation, dosages will be fixed for the second year's trial to find out the right dose for 2 year old trees and so on for the following three years. When the dosage for the young trees have been fixed up there will be no difficulty in deciding a right dose for grown up trees as they are not yet sensitive to the fumigant but on the other hand, young trees receive a severe shock if the dose is slightly increased, especially when there is no rainfall for a week or so after the application of fumigant.

(*ii*) *Avoiding borer susceptible areas for apple plantation.*—It has been observed in nature that borers thrive in dry soils poor in organic matter. Experiments carried out in the laboratory also confirmed this fact. In nature there is little evidence of borer attack on pear, peach, apricot, etc. In order to see if the dry portions of the orchard can be planted with fruit trees other than apple with advantage, such portion of Chaubattia orchard has been planted with peach, plum, apricot, cherry and apple and observations will be made on them for evidence of borer attack. Every kind of fruit tree is replicated 6 times with 3 trees as the unit. Mixed planting in a similar way has been done by the Horticulturist of the station in different types of soils with different objects in view. All these trees will be kept under observation and a record kept of the behaviour of the borer towards different kinds of fruit trees in different soils.

(*iii*) *Application of well rotted manure to apple trees.*—The results of the experiment on the food material of young grubs carried out in laboratory in 1937-38 indicate that young grubs after hatching can live in the soil for a long time if they are solid, undecomposed pieces of orchard vegetation present in the soil. They ordinarily do not feed on rotten organic matter but when forced to do so, it only hastens their death. It is

therefore proposed to plant 10 plants of vigorous stocks in each of the three kinds of soil mentioned below :—

1. Orchard soil + rotted farmyard manure (to be mixed in the same proportion as is used for planting young apple trees).
2. Orchard soil + undecomposed orchard vegetation.
3. Orchard soil alone.

These will be planted in big tubs in December 1939 and 20 young grubs liberated in each tub in July 1940. Roots of all plants will be examined for borer attack in December 1940 and 20 young grubs again liberated in each tub in July 1941 and so on till we are able to arrive at some definite conclusion :

2. *Woolly aphis* (*Eriosoma lanigerum, Hans*).

(*a*) *Control of woolly aphis on aerial parts of trees.*—The aphids on aerial parts can be controlled by predators, parasites, by growing resistant varieties, by spraying such chemicals in summer which can kill the aphids but do not scorch the tender leaves and by spraying the infested trees very thoroughly with a strong contact insecticide so that all aphids hiding in cracks and crevices may be killed.

I. *Predators.*—There is already one species of lady bird beetle in Kumaun which keeps the pest under control from the beginning of spring to about the end of July. It is so very effective that during early summer when all susceptible varieties should have been covered with woolly aphis colonies, one very often fails to find a single colony in the whole orchard. After July, lady birds retire to hibernate on grasses and herbs growing round about the orchards and hence from August onwards the woolly aphis has no important enemy. Larvæ of one species of Syrphid fly feed upon woolly aphis but they do not effect check to any appreciable extent and number of colonies goes on increasing till about the middle of December.

Reports from Punjab show that they have got other species of predators also. We have therefore arranged to get these in March 1940, and breed them under controlled conditions. They will first be liberated in an enclosure where some plants of Malling Type II, a very susceptible stock, are planted. The local predators will not be allowed inside the enclosure. Here observations will be made on the habits and economic importance of newly imported ones. Later on a counted number will be liberated in Chaubattia and other orchards and observations made to see if they establish in nature.

II. *Parasite.*—A chalcid parasite, Apbelinus mali, is known to have established in certain countries and is effecting some check at a few places. It was imported to Chaubattia and Allen Orchards on several occasions in the past, but it did not establish at any of the two places. In 1931 it was bred under controlled conditions at Chaubattia and Ramgarh and at both places it survived for two generations. Adults of 3rd generation emerged about the middle of May but they all died without having laid eggs. The parasite was not given a further trial owing to the fact that there was no host in early summer on aerial parts of the trees in many orchards in Kumaun and hence it could not establish itself in nature. It has, however, been suggested that the parasite may be tried at different elevations and if found to thrive at any place, it may be bred there under controlled conditions and liberated whenever considered necessary. The parasite is said to have established itself in the Punjab and the Entomologist to Government,

Punjab, has very kindly promised to send parasitised aphids in March 1940. Large breeding cages have been put up at Bhowali, Bhim Tal and Chaubattia and as soon as we get the parcel, the parasite will be liberated in these cages and observations made of its behaviour and mode of reproduction.

III. *Selection of resistant varieties.*—Some varieties of apple are more resistant to Woolly aphis than others, but the grower will not discard a good commercial variety for reason of its being susceptible to this pest, neither will he choose an immune variety if it is not commercially important. Northern spy, for instance, is an immune variety in Kumaun but a few trees of this variety are to be seen in Chaubattia and Allen orchards only whereas the king of the Pippin a very susceptible variety, is the favourite of all the big orchardists at Ramgarh. It is therefore not considered necessary to take up the question of resistant varieties at present.

IV. *Control of woolly aphis by summer sprays.*—Replicated experiments were carried out under lab. conditions in 1937-38 to test the comparative value of K. oil emulsion, Fish-oil resin soap, nicotine sulphate and soft-soap, nicotine sulphate alone, soft-soap alone, and a proprietory oil emulsion as summer spray. Results were analysed by the method of analysis of variance. Every year nicotine sulphate and soap was found to be most effective and next comes the proprietory oil emulsion. In the latter two years nicotine sulphate and soap was tried on field scale also and the results were equally satisfactory. The results were sent to Mr. Greenslade of East Malling, an expert on Woolly aphis for his opinion and he has confirmed the conclusions drawn from the experiments carried out here (*vide* Enclosures I and II).

It is now proposed to hold demonstrations at a few important fruit growing centres to teach the growers the method of preparing combined soft-soap nicotine spray and show them its effect on Woolly aphis.

V. *Control of Woolly aphis by winter spray.*—Fish-oil rosin-soap, emulcified tar oil, and K. oil emulsion have been tried as winter spray during three successive years in properly laid out experiments. Fish-oil rosin-soap and tar-oil emulsion are both very effective, but the growers will not be able to emulcify tar-oil properly, and besides there are so many brands differing in chemical constitution that it will not be safe to give a particular formula for preparing the emulsion or suggest a particular strength for application. It is proposed to prepare several kinds of rosin-soap with a cheap-oil such as Mowah oil in the laboratory. The comparative value of these home-made rosin-soaps will be judged by trying them on Woolly aphis by a replicated experiment on randomised block system to be carried out in Winter 1939 and 1940.

VI. *Trial of soil fumigant.*—Soil fumigants were tried against the root colonies in 1936 and 1937. 105 young plants vegetatively raised from the susceptible Malling Types and having almost uniform infection on roots were selected for the following 7 treatments :—

1. Cs2 ½ oz. to 4 gallons of water at ⅜ gallon per plant.
2. CS2 emulsion at ¼ pint per plant.
3. P. D. B. 1|5 oz. per plant.
4. Napthelene ½ oz. per plant.
5. Seekay Soil fumigant ¼ oz. per plant.
6. Shirlan 1|5 oz. per plant.
7. Control (Untreated).

All replicated 15 times.

P. D. B. and Seekay soil fumigant proved effective but as 60 per cent. of plants died with these treatments, their use at effective strength is impracticable. Other treatments did not prove effective. No further trial with soil fumigant is considered necessary as we are concentrating on the propagation of aphis resistant stocks and besides, cleaning up the aphids on roots of non-resistant stocks in the nursery will not help much as they will again be attacked when transplanted. The control of Woolly aphis on roots of grown up trees by means of soil fumigants is very expensive as the fumigant will have to be applied several times during the year.

VII. *Use of aphis resistant stocks.*—The best and cheapest control method of underground colonies lies in the use of aphis resistant stocks which may also be suitable from horticultural point of view. Northern spy, a very resistant stock, unfortunately lacks in good horticultural qualities.

The relative susceptibility of different imported and local stocks are being tried under controlled conditions since 1935. Each year 3 to 5 plants of each type of stock are planted out in big tubs and placed inside a wire-gauze enclosure to save the woolly aphis on these plants from its predators. The plants are artificially infected with woolly aphis in summer and rainy seasons. In the following winter the extent of infestations on each plant is measured and the results statistically analysed. The susceptible varieties are almost fully covered with colonies within a month of first infection and those showing resistance are reinfected several times during the season. The susceptible varieties are discarded and the resistant ones similarly tried for 2 years more. If in 3 years continual trial, they remain free from woolly aphis, they are named as highly resistant and given to horticulturist for propagation and testing of their horticultural qualities.

All the Malling types have been found to be very susceptible. Among the local types L. T. I. is somewhat resistant ; the rest are very susceptible. Merton 779 and 793 (crosses between Northern Spy and Malling type II) and Pyrus baccata (an indigenous wild species) are highly resistant. Merton 778 and 789 (also crosses between Northern Spy and M. T. II) have been tried only for 2 years. Aphids feed and reproduce on them but only one or two colonies are formed in the whole season. They will be tried in 1940 also.

Some seeds of wild species of Pyrus were received from Russia in 1936. These were sown in nursery and the seedlings artificially infected with woolly aphis. The plants which remained free after artificial infection were planted in big tubs inside the wire-gauze enclosure in December 1938, and are being artificially infected after every fortnight. Some of them are not being touched by the aphids and they are vigorous growing also. These plants will be given to the horticulturist in winter 1939 for propagation and the offsprings of each plant put to the same severe test in subsequent years for judging their power of resistance.

VIII. ***Observations on some factors which may lead to remedial measures.***

Effect of different soils on root colonies of woolly aphis.—**It has been observed in nature that infection on roots of the same variety varies consi-**

derably in different parts of the orchard. To ascertain the fact if a particular soil is more suitable for root infection than other, 6 plants each of Malling type II, were planted in 3 different types of soil, *viz.*, sandy, clayey, and organic in big tubs in winter 1937. All plants were artificially infected in April 1938. They will be allowed to grow for several years and in autumn of each year the roots will be examined for colonies of woolly aphis.

Differential response of scions on vegetatively reproduced stocks.—To study the interaction between the apple stock and scion with regard to woolly aphis attack, an experiment was laid out in 1937. Merton 779, a highly resistant and Malling type II, a highly susceptible stock, inter-worked and each on itself also, were planted in big tubs. Each treatment was replicated 4 times. All the 16 plants were artificially infected with woolly aphis. The examination of roots and scion in winter 1938 did not show any interaction. Observation will, however, be continued for a few years more.

3. *Trial of nicotine spray for the control of leaf-curling peach aphis (Anuraphis helichrysi) and judging the toxic effect of tar-distillate wash on its eggs.*—The idea is to find out the right time, of spraying nicotine and also to see if Tar-distillate wash has any effect on its winter eggs.

It is proposed to randomise the following 16 treatments in three blocks with one tree as unit :—

1. Tar-distillate wash (as ovicide in winter).
2. Nicotine spray at bud-swelling (for queen mothers).
3. Nicotine spray at bud-burst (for the first generation).
4. Nicotine spray 10 days after bud-burst.
5. 1 + 2.
6. 1 + 3.
7. 1 + 4.
8. 2 + 3.
9. 2 + 4.
10. 3 + 4.
11. 1 + 2 + 3.
12. 1 + 2 + 4.
13. 1 + 3 + 4.
14. 2 + 3 + 4.
15. 1 + 2 + 3 + 4.
16. Untreated control.

All treatments are to be replicated 3 times.

Spraying in late season is not expected to produce the desired effect as after the curling of leaves every individual cannot be touched by the spray fluid.

4. *Control of pear Tortrix (Acrocdita raevana) by means of stomach poisons.*—The following 7 treatments will be randomised in 6 blocks with

2 trees as unit and the effect of different treatments will be estimated by the percentage of damaged leaves :—

1. Lead chromate—Early spring.
2. Lead arsenate—Early spring.
3. Lead chromate—Late spring.
4. Lead arsenate—Late spring.
5. Lead chromate—Early + late spring.
6. Lead arsenate—Early + late spring.
7. Untreated control.

5. *Control experiment against apple-stem borer* (*Zeuzera sp.*).—124 attacked trees will be marked and divided in blocks of 4 trees each for the following 4 treatments :—

1. Fumigation with CS2.
2. Fumigation with sodium cyanide.
3. Hooking out of the caterpillar.
4. Untreated control.

Efficiency of each treatment will be judged by examining all the trees 15 days after the treatment to see which of the caterpillars are still feeding and again in the following August for noting the number which reaches maturity under each treatment.

6. *Scale insects* (*Lecanium sp. and Diaspis sp.*).—None of the two scales is a serious pest in any of the big orchards in Kumaun but some peach trees are very severely attacked by them at several places near about Ranikhet. Study of the life histories of the pest in Kumaun has shown that they can be checked from entering into any orchard, which has remained free so far, if the growers are careful in not importing any living plant material infested with young scales, which can very easily be over-looked. If, however, the pest has been brought to orchard by some unknown agency such as birds or insects, the twigs showing signs of attack should be at once cut and burnt.

I. *Control by means of chemicals.*—If any of the pests establishes itself in any orchard and spreads on many trees, it can be controlled by spraying the trees with a suitable scale insecticide. All the important scale insecticides are under trial since 1936. Each year 6 averaged sized peach trees attacked by Diaspis sp. are selected for the trial of insecticides named below. As there is not enough material available for trying different insecticides on different parts of the same tree, each tree is given a separate treatment. There being thousands of scales of each tree at the time of spraying and all trees being on the same soil and of the same age, the results obtained may be taken as fairly conclusive.

The insecticides under trial are :—

1. K. Oil emulsion—

   soft-soap 1 lb.
   K. Oil 2 gallons. } × *10 parts of water.*
   water 1 gallon.

2. Fish oil rosin-soap—8 ozs. to one gallon of water.
3. Soft soap—8 ozs. to 1 gallon of water.

4. Caustic soda wash—
   Caustic soda 1 lb.
   soft soap 1 oz.
   water 10 gallons.
5. Lime-sulphur (sp. gr. 1.318) 1 part.
   water 8 parts.
6. Control (untreated).

Spraying is done after the leaf-fall and a thorough wetting is given to all trees. A piece of bark, one square inch in area, is removed from each tree before and after spraying and the number of living and dead scales on each piece counted. The results are analysed by means of 2.

In 1936, the percentage mortality was almost cent per cent. with fish-oil rosin-soap, soft-soap, and lime-sulphur. Others were not very effective. In the years 1937 and 1938 the results were similar except that the mortality with fish-oil rosin-soap was only 80 per cent. and 92 per cent. respectively. The experiment will be repeated in winter 1939 with only the three most effective insecticides and 6 samples of pieces of bark instead of the one will be taken from each tree for counting living and dead scales on them.

II. *Selection of resistant varieties.*—So far, only a few varieties of peach are attacked by these insects. Three plants of each of the 20 important varieties grown in Chaubattia orchard were potted in winter 1938 and artificially infected with both kinds of scales in April 1939. The plants will be examined for the scale insects after leaf-fall in 1939 ; and thereafter the artificial infection and the examination of plants for the scales continued for the next 4 years.

7. *San Jose Scale* (*Aspediotus perniciosus*).—It is very serious pest of all deciduous fruit trees. It had established itself in Kulu Valley, Simla Hills, and in North Western Frontier Provinces, but U. P. hills were quite free till recently when it was noticed on a few fruit and ornamental plants imported from Kashmir. It is proposed to trace and examine all plants imported from Kashmir and start a complete San Jose Scale survey in these hills in the autumn of 1939 if the necessary staff is provided.

ENCLOSURE I.

COPY OF DEMI-OFFICIAL LETTER NO. *nil*, DATED THE 29TH NOVEMBER 1937, FROM MR. R. M. GREENSLADE, EAST MALLING RESEARCH STATION, EAST MALLING, KENT, TO THE SECRETARY, IMPERIAL COUNCIL OF AGRICULTURAL RESEARCH, NEW DELHI.

Your letter of 29th October 1937, to Dr. Hatton, No. L.F.-153|35-A., has been passed to me for reply.

The summer sprays are interesting, it is evident that soft-soap alone has very little toxicity to this aphids. These results also show the efficiency of the combined soft soap-nicotine sulphate spray, under suitable conditions. I should be very interested to hear the results of using these sprays in the field. My own experience is that control with soap and nicotine is effective when the spraying is done by reasearch worker, but on a commercial scale

the same spray gives only about 50 per cent. kill. This is also the case with atomised sprays of pyrethrum in oil on which we have been working. It seems that we must concentrate on improvement of field control by attention to the method of application, time of application and any other means of obtaining commercial control equal to our experimental results.

ENCLOSURE II.

COPY OF THE LETTER, DATED THE 20TH SEPTEMBER 1938, FROM MR. R. M. GREENSLADE, EAST MALLING RESEARCH STATION, KENT, TO RAI BAHADUR R. L. SETHI, M.SC., I.A.S., IMPERIAL COUNCIL OF AGRICULTURAL RESEARCH.

I was very pleased to receive your letter enclosing notes of spraying experiments against Woolly aphis.

The conclusion that in commercial spraying some colonies are left untouched must be correct, as I have found it impossible to obtain complete control even at 400 lbs. per square inch, although this gives a good commercial control.

It is interesting to note that colonies were killed out by Nicotine sulphate without complete wetting. In our climate I have only noticed this in warm weather when using Nicotine (98 per cent. pure) at ½-oz. in 6 gallons in place of the sulphate.

D. MYCOLOGICAL SECTION.

(For 5 years ending July 9, 1944.)

During the last five years the mycological work was mainly confined to collection, identification and the study of life histories of different fungoid, bacterial and physiological diseases prevalent in Kumaon. The detailed studies of the life histories of the most important of these have been completed but very few control measures could be investigated so far. The next five years will mostly be devoted to devise practical control measures and also to complete the study of the remaining diseases.

I. Observations and systematic survey of the major diseases of fruits and fruit trees will continue. The distribution of the Major diseases in Chanbattia orchard has been mapped out and the correlation of one of the diseases, the pink-disease caused by *Corticium salmonicolor* B. and Br. with soil conditions has been worked out. It is found mostly on loamy and sandy soils and least on clayey soils. Similarly the correlation of the other major diseases with soil conditions needs to be worked out. The systematic survey of the newly planted horticultural experimental areas will be taken up now with a view to correlate diseased conditions of the plants with soil conditions, stocks, manurial treatments, rotation, etc.

II. *Collar-rot or root-rot of fruit trees caused by Rosellinia s.* :—The study of the life history in all aspects is nearly complete. Except sporadic examination no systematic study of the possible control measures has been taken up in detail so far, because the life history of the fungus was not definitely known. Preliminary studies indicate that soil sterilization is a possible measure which can be adopted for controlling the diseases. Laboratory and pot culture studies have proved the

efficacy of the following soil sterilizers (*i*) Shirlan NA (0.08 per cent.), Aretan (0.01 per cent.), Carbon disulphide (1.0 per cent), Phynyl (0.20 per cent.), Cheshunt compound (0.09 per cent.) and Copper Sulphate (0.60 per cent.) in controlling the disease. But the cost of such treatments and their lasting effects have not been worked out on field scales. But soil sterilization as a practical means might not be of general application in Kumaon even if it is proved quite efficacious and hence the study of the resistance of stocks was started. Twenty-two apple stocks (both local and foreign) are under experimentation. Out of these twenty-two, one stock Malling type XIII has remained free from infection so far. Others are still under observation. Experience in other orchards such as Sommerford orchard (Ramgarh) and Pine View orchard (Bhowali) supported by laboratory studies have clearly shown that painting of the collars of the apple trees with coal tar is very injurious and invariably induces collar rot. All the coal tarred trees in these orchards have died due to collar-rot or root-rot. Replicated experiments will be laid out this year with this Malling type XIII and other types which are picked out in different orchards in Kumaon in highly infected areas to study their behaviour not only in healthy and sound condition, but also when they are painted with coal tar and otherwise injured. Thus only can the superiority of Malling type XIII and others as stocks can be established taking into consideration environmental conditions also. This is an important and useful piece of work which will be taken up now. The relation of the collar-rot of apple with that appearing on apricot, peach, plum, cherry, chestnut, pear and oak is yet to be established. A good progress in this study has already been made.

III. A. *Stem black disease of apple caused by Coniothecium chomatosporum Corda* :—(a) The study of the life history and control measures of this serious disease of apple is completed and published. Red lead and copper carbonate in equal quantities made into a paste with raw linseed oil is found to check the disease. An easy technique and the economies of its use in general practice remain to be examined. (b) Certain other aspects of the problems, such as, the thickness of twigs which need painting, callus formation, etc., have also been started in collaboration with the Research Assistant Horticulturist. The following are the details of the experiments. Ten plants of apple variety Rymer were selected at randon all over the orchard. The twigs one inch thick, half inch thick and one fourth of an inch thick were pruned in the months of August and December 1938. The first treatment was replicated four times while the last two were replicated six times each. The results are awaited. (c) Lanoline is known to hasten callus formation. An experiment to find out whether lanoline helps in preventing the disease was laid out in the orchard with the following six treatments :—

I. Untreated and uninoculated (Control I).

II. Treated with Lanoline and uninoculation.

III. Treated with Lanoline and inoculated.

IV. Untreated and inoculated (Control II).

V. Treated with Lanoline mixed with equal amounts of Red lead and copper carbonate and inoculated.

VI. Treated with equal amounts of Red lead and Copper carbonate with raw linseed oil and inoculated.

The experiment is replicated six times. New as well as old shoots ½ inch thick of variety Jonathan were pruned and treated with the above six treatments. In all twenty-four trees of Jonathan were selected at random from all over the orchard, twelve for new shoot pruning and twelve for old shoot pruning. The data will be collected in due course. (d) It is yet to be established by cultural studies and inoculation experiments whether the strain of the fungus obtained from cracked apple fruits is the same which causes stem black or not.

The most economic and easy method of control of the cracking of fruits seems to be the systematic removal of diseased mummies in winter.

IV. *Stem-Brown disease of apple caused by Botryophaeria ribis Gross and Dugg* :—The study of the life history is complete. The fungus is known to infect other fruit trees such as, pear, peach, apricot, plum and chestnut when cross inoculated. A mixture of red lead and copper carbonate in equal amount in raw linseed oil is found effective in controlling this disease as well. It is proved that the same paste can effectively control two serious diseases. This control measures needs to be tested on a large scale on orchards before its practical application can be recommended. An experiment to see whether lanoline does help in preventing the disease similar to the one above described in item III a will be laid out in April 1940.

V. *Pink disease of apple caused by Corticium salmonicolor B. & Br.* :—(a) The studies in the life history of the fungus in all aspects is completed. The fungus can easily infect other fruit trees such as pear, peach, appricot and chestnut. (b) The cutting down of affected branches is necessary to lessen the incidence of the disease. The parts affected cannot be cured. The commonest seat of infection is the fork of a branch or stem, this being the dampest part of the bark, so that if the forks of branches and stem are painted with some suitable paint before the onset of the rainy season it should prevent the disease. With this point in view a replicated control experiment was laid out in the orchard.

The six forks of each of the twelve apple trees selected at random in the orchard in Block A-s were treated with the above six treatments. The data are being collected and the results will be analysed statistically in due course.

VI. *Hairy root disease of apple* :—The identity of the bacteria is yet to be established. Unlike Pseudomonas rhizogeus Riker et al, it is Gram-negative. Cultural studies are not yet completed. (Control measure so far examined consists in the partial soil sterlization with chemicals, (a) Shirlan NA, (b) Aretan, (c) Carbon disulphide, (d) Cheshnut compound, (e) Paradichlor-benzene, (f) Pyenyl, (g) Copper sulphate, and (h) Sodium chlorate. The work is still in a preliminary stage. The possibility of the occurrence of a stock resistant to the disease will also be investigated.

VII. *Leaf spot disease of apple and pear caused by Phyllosticta sp.* :—(a) This is a serious leaf disease. The study of the life history and parasitism of the fungus is completed.

(b) *Control measures against apple leaf spot* :—A replicated experiment is laid out in a portion of block N (Claygate Pearmain) and

Block E (Esopus spitzenberg) in the orchard. The following three treatments each replicated seven times are carried out :—

(i) Spraying with Colloidal sulphur.

(ii) Spraying with Lime sulphur.

(iii) Control (Unsprayed).

The spraying of the trees was carried out during the (a) dormant condition of trees, (b) open cluster stage, (c) Petal fall stage, and (d) in July. The concentration of Colloidal sulphur was 5 lbs. in 100 gallons of water while that of Lime sulphur was 1-10 for dormant stage, 1-30 for open cluster stage, 1-100 for petal fall stage and 1-120 for July spray. The pressure for spraying was kept at 75 lbs. One hundred leaves were picked up at random from each tree and the percentage of the infection of each leaf was recorded. The data will be worked out statistically in due course.

(c) A control experiment against peer leaf spot disease similar to the one for apple leaf spot disease (b) will be laid out next year.

The practicability of the control measures for general use will be studied.

VIII. *Control of sooty, blotch and fly speck of apple caused by Leptothyrium Pomi (Fr.) Sacc.* :—This disease causes the disfiguring of the fruits and thereby reduces the market value by half. It is hardly skin deep. The spraying of the fruits with Avon's colloidal sulphur and lime sulphur was carried out in the year 1938 and it was found that lime sulphur was effective in cotrolling the disease. With this treatment (Lime sulphur spraying) 58 per cent. of the fruits did not have sooty blotch and fly speck in them. The treatment although effective is rather tedious and expensive and therefore the necessity of devising a cheap method of control was considered necessary. Washing the fruits with Bleaching powder and Sodium chlorate was carried out. The treated fruits are still under observation.

IX. *Stem canker of apple caused by Monochaetia sp.*:—Study of the life history of the fungus and suitable methods of controlling the disease, *e.g.*, by spraying which have been started are yet to be completed.

X. *Powdery mildew of apple caused by Sphaerotheca sp.* :—This disease is effectively controlled by the dusting the trees with flungus sulphur. The use of fungus sulphur and its economics in general practice remains to be investigated. The disease is serious especially for the nursery plants and effective control is called for.

XI. *Brown patchy disease of apple twigs caused by Septebasidium sp.*:—The experiments to test the efficacy of spraying with lime sulphur and Colloidal sulphur will be tested in due course. The fungus encircles the buds and kills them.

XII. *Storage diseases of apples* :—Not much work in this line could be done so long, except preliminary investigation of two diseases of apple in storage, *i.e.*, soft rot caused by *Penicillium expansum* LK and bitter rot caused by *Gloeosporium fructigenum* Berk. A complete record of diseases of the experimental apple fruits in storage is kept and correlation of the various disease with treatment is being worked out

from year to year. There are several problems of storage diseases in apple which needs to be tackled in fuller detail, namely :—the spore load on the surface of apple fruits before storage, and fungus flora of the storage room, latent infection of the apple fruits, etc.

XIII. *Sun scorch of peach and cherry* :—This disease which causes canker of stem and twigs is very serious in Kumaun and is known to affect stone fruits. In 1935 a control experiment on replicated field scale was laid out in peach block (L) and cherry block (S) of the orchard Indication of successful treatments have been obtained but final conclusions are not possible before four or five years' time.

XIV. *Control of lichens.*—It has been established that lichens can be effectively controlled by spraying old trees of apple and pear in the months of December and January with a solution of commercial caustic soda (3 lbs. in 20 gallons of water). An experiment to test the efficiency of this measure in terms of crop various (apple) is being carried out in collaboration with the horticulturist. The complete crop record of eighteen badly affected trees of apple variety Norfolk Beefing was taken in 1938 and 1939. In December and January 1940 spraying of these trees with caustic soda will be carried out. The effect of lichen attack will be known in the next cropping.

XV. *The branch blister and canker of pear caused by Haplosporella mali* :—The studies in the life history of the fungus is in progress. The cultural characters and pathogeniety need thorougb study before control measures can be experimented upon. Spraying lime, Colloidal sulphur, Bordeaux and spray fluids will be tried in due course. This disease causes considerable damage to the stem.

XVI. *Canker of pear stem caused by Monochaetia sp.* :—The incidence of this disease in the orchard is as high as 65 per cent. The life history of the fungus in all details remains to be completed before any suitable control measures are carried out.

XVII. Observations and systematic study of other minor and newly occurring diseases of fruits and fruit trees are to be continued.

APPENDIX XI.

Note on Subject No. 9(a) :—Extension of Fruit Research Schemes—Bengal, beyond 1st March 1940. (Rs. 15,912 for two years.)

In January 1932, the Advisory Board recommended the Horticultural Research Scheme, Bengal, at a cost of Rs. 57,030 spread over five years (*vide* pages 26, 330-331, 342-343 and 371—378 of the printed proceedings). It was approved by the Governing Body in October 1932 and initiated on 1st April 1934. The first five year period of the scheme expired on the 31st March 1939.

2. In November 1938, however, the Provincial Government applied for an extension of the scheme for one year from the 1st April 1939, stating that they were considering a proposal to take up the scheme on a permanent basis and that they would like to continue the experiments in hand for one year pending final decision. The cost involved was Rs. 7,956 and the proposal was sanctioned subject to the condition that the Provincial Government shared half the cost of the scheme.

3. The Provincial Government have not, as yet, taken any decision as to the future of the scheme and have now submitted a proposal for a further extension of the scheme for two years (from 1st March 1940) at a cost of Rs. 15,912 half of which would be borne by them (Annexure). The scheme has been approved by the Bengal Agricultural Research Committee. The technical programme of work for the period of extension is also appended to the scheme.

4. The proposal is for the consideration of the Advisory Board. It will first be considered by the Fruits Sub-Committee whose report will be submitted to the Board in due course.

ANNEXURE.

EXTRACTS FROM LETTER NO. 1382, DATED THE 27TH APRIL 1939, FROM THE SECRETARY TO THE GOVERNMENT OF BENGAL, AGRICULTURE AND INDUSTRIES DEPARTMENT, AGRICULTURE BRANCH, TO THE SECRETARY, IMPERIAL COUNCIL OF AGRICULTURAL RESEARCH, SIMLA.

I am directed to forward herewith Enclosure for favour of inclusion in the agenda of the meeting of the Advisory Board to be held in May, 1939, a copy of the scheme(s)† which have been approved by the Bengal Provincial Agricultural Research Committee, together with a copy of the minutes of the meeting of the Committee held on the 22nd April 1939.

I am to say that Government recommend the schemes subject to the reservation that no financial liability will devolve on them except in respect of

* * * * * * * * * * *

† 7. Proposal by the Department of Agriculture, Bengal, for the extension of the Fruit Research in Bengal at Krishnagar, at a cost of Rs. 15,912, for a period of two years, with effect from 1st March 1940.

* * * * * * * * * * *

the schemes Nos. (7) and (8) where they have accepted liability to the extent of half the cost of the scheme.

* * * * * * * *

EXTRACTS FROM THE PROCEEDINGS OF THE MEETING OF THE BENGAL PROVINCIAL AGRICULTURAL RESEARCH COMMITTEE HELD ON 22ND APRIL 1939.

* * * * * * * *

Item (7) the Horticultural scheme, was considered by the Committee and recommended.

* * * * * * * *

ENCLOSURE.

PROPOSAL FOR EXTENSION OF FRUIT RESEARCH SCHEME IN BENGAL AT KRISHNAGAR AT A COST OF RS. 15,912 FOR A PERIOD OF TWO YEARS WITH EFFECT FROM 1ST MARCH 1940 TO 28TH FEBRUARY 1942.

The horticultural scheme at Krishnagar financed by the Imperial Council of Agricultural Research was sanctioned for five years at the first instance.

The scheme was started on the 1st of April 1934. The five years' period of the scheme terminated on 31st of March 1939.

Obviously the period is very short for achievement of definite results from experiments with fruit trees. Results of the various experiments conducted under the scheme have been reported upon in the annual reports of the station. It may be said, however, that several varieties of papaya, pineapple, banana, guava and citrus have shown promise and the results so far obtained require confirmation by further trial.

Useful information has also been obtained from the cultural experiment with pineapples and papayas.

The selected mango and lichi varieties have been put under trial in systematically laid out plots in the latter part of the year 1937-38.

The local Government are considering a proposal to take up the Horticultural Research Station on a permanent basis with further extension in area as well as staff. The department has already approached the Government for the purpose ; but it may take some time, probably two years, before any definite decision can be reached.

Under the circumstances, the Imperial Council of Agricultural Research is approached for financing the scheme, as it is, at the cost of Rs. 15,912 for two years more after the termination of the current period, i.e., from 1st March 1940 to 28th February 1942. Fifty per cent. of the total expenditure would be borne by the local Government.

It is proposed to continue the experiments in hand only during the period, a programme of which is enclosed herewith.

A detailed account of the finance that will be required is given below :—

	Rs.
One Horticultural Officer at Rs. 255 per mensem from 1st March 1940 to 28th February 1942	6,120
One Field Assistant at Rs. 55 per mensem from 1st March 1940 to 28th February 1942	1,320
One clerk at Rs. 30 per mensem from 1st March 1940 to 28th February 1942	720
One peon at Rs. 13 per mensem from 1st March 1940 to 28th February 1942	312
Travelling allowance	1,000
Books	150
Contingencies including wages of four malis at Rs. 15 per mensem for 2 years	6,290
Total ..	15,912

PROGRAMME OF THE HORTICULTURAL RESEARCH STATION, KRISHNAGAR, FOR THE YEAR 1939-40.

(1) *Mango.*

(a) Observations on the mango varied trial.—All possible notes and ovservations will be taken on the mango varietal trial started last year.

(b) Experiments on the vegetative propagation in mango.—Budding, enarching, cuttings, effect of plant hormones and chemicals will be studied in this connection.

(c) Raising of the mango seedlings by different methods.

(d) Collection of locally well-known available varieties.

(2) *Lichi.*

(a) Observations on the lichi varietal trial on the line similar to the mango.

(b) Gooty making and the study of plant hormones and the chemicals in this connection.

(c) Collection of local reputed varieties.

(3) *Papaya.*

(a) Observations on the varietal trial.

(b) Monthly sowing and planting with the following methods :—

(i) Seeds sown in situ.

(ii) Seeds sown in seedbeds.

(iii) Seeds sown in pots.

(c) Effect of pruning on the change of sex.

(d) Vegetative propagation trials.

(e) Selfing.

(4) *Citrus.*

(a) Multiplication of the varieties grown here for a proper varietal trial on an extensive scale.

(b) Observations on the orange.—Liming experiment.

(c) Budding trials in Malta and other citrus.

(d) Raising and study of stock plants.

(5) *Guava.*

(a) Multiplication of the proved varieties for a varietal trial.

(b) Raising seedlings for grafting purposes.

(c) Experiments on the pruning and bending.

(6) *Pineapple.*

(a) Varietal trial of successful varieties.

(b) Study of the fruits to see which of the varieties produce seeds

(7) *Plantain.*

(a) Varietal trial with the successful varieties.

(b) Clonal study of the varieties.

(c) Study of the successful varieties for the hybridization work.

(d) Collection of well known varieties.

(8) *Tomato.*

Varietal trial will continue for the purpose, both the imported seeds and the seeds of the proved varieties collected here will be used.

APPENDIX XII.

Note on Subject No. 9 (b) :—Fruit Research—Extension Scheme—Baluchistan Fruit Canning—Revised Scheme.

A copy of a revised scheme of fruit canning and preserving research at Quetta is attached for consideration (Annexure I). The Administration requires an additional grant of Rs. 9,521, the variations from the sanctioned grant being as follows :—

				Excess. Rs.
Pay of staff	..	..	..	.. 1,836
Allowances	..	..	..	.. 1,733
Initial expenses	..	..	..	.. 1,452
Contingencies	..	..	..	.. 4,500
			Total	.. 9,521

There is also a proposal to give the Research Assistant an increment of Rs. 25 in the 5th year. If this is accepted the increase in total cost will be Rs. 300 more, *i.e.*, Rs. 9,821.

2. The Scheme was first sanctioned in July 1936 at a cost not exceeding Rs. 49,600 spread over five years. A revised programme which was submitted for consideration of the Advisory Board in May 1939 provided for an excess expenditure of Rs. 30,600 over the sanctioned estimate. The Fruit Sub-Committee which first considered the matter drew attention to the fact that some of the items mentioned in the programme were already being investigated under the Lyallpur fruits and vegetable preservation scheme, and referred it to a small Sub-Committee consisting of the Agricultural Commissioner with the Government of India and Messrs. Stewart and Mustafa.

3. The Advisory Board after consideration of the report of the Sub-Committee and a full discussion of the proposals made in the revised programme recommended as follows :—

(1) that the Baluchistan Administration be asked to arrange for the immediate supply of water to the laboratory, waive the departmental charges and meet the other items of essential expenditure (capital), bearing in mind the fact that it has already realised the departmental charges to the extent of Rs. 547 ;

(2) that subject to the acceptance of the above, an additional grant of Rs. 3,000 should be given for meeting the excess expenditure already incurred and for the electric installation (*viz.*, Rs. 2,253 *plus* Rs. 872 = Rs. 3,125 or Rs. 3,000 round) ;

(3) that for a year at least, the recurring expenditure be kept within the amount sanctioned (Rs. 2,500 per annum for 5 years) and thereafter it might be seen how far it needed to be increased ; and

(4) that the technical programme should be revised accordingly in consultation with the Agricultural Commissioner. Relevant extracts are enclosed (Annexure II).

4. The Governing Body sanctioned the additional non-recurring grant of Rs. 3,000 *subject to the above-mentioned conditions.* How far these conditions (1) and (3) have been observed are explained in the revised proposal but the technical programme now presented is the same as the old one. The report for the first year is also before the Board separately.

5. The revised scheme will first be examined by the Fruits Sub-Committee whose report will be submitted to the Board in due course.

ANNEXURE I.

Revised Canning and Fruit Preserving Research Scheme, Quetta, Baluchistan.

In January 1932, a scheme to establish a Canning and Fruit Preserving Research Laboratory at Quetta was submitted to the Imperial Council of Agricultural Research. Under this scheme, the initial expenses came to Rs. 22,000 while under working expenses a sum of Rs. 6,484 per annum was provided. This scheme was considered in August 1933 by the Advisory Board of the Imperial Council of Agricultural Research and it was suggested that the Agricultural Officer should pay a visit to Lyallpur and after consulting the Fruit Specialist to the Punjab Government should submit a revised scheme. Consequently, a revised scheme was submitted, reducing the initial expenses from Rs. 22,000 to Rs. 12,500 and the working expenses from 6,484 to 2,500 and in this form it was sanctioned in January 1934, the total amount provided being Rs. 49,600 spread over 5 years. It may be mentioned at this stage that though the revised scheme was prepared jointly by the Fruit Specialist to the Punjab Government and the Agricultural Officer in Baluchistan and also was subsequently considered by the Sub-Committee of the Advisory Board of the Imperial Council of Agricultural Research, numerous important items of machinery such as flanger, electric motor for the reforming machine, steam jacketted pan, lye peeling tank, syrup pumping unit and very many more but essential items were completely left out.

In May 1935, came the Great Earthquake and destroyed the main building at the Fruit Experiment Station which it was proposed to convert into the new Canning Laboratory. The old building was situated near the water and electric mains and it was considered that a sum of Rs. 4,000 provided in the scheme would be quite ample for the building completely laid out with water. After the Earthquake, however, the whole plan of the building site has been changed. Not only had the new Laboratory to be shifted to a corner of the Farm adjoining the main road where it is away from water and electric supply but it had to be constructed quake-proof according to the Quetta Reconstruction Code. The building alone has cost us Rs. 5,544 that is, an increase of Rs. 1,544 over the original estimate. Under these post-earthquake conditions, the estimates for providing the Laboratory with water and electric supply come to Rs. 5,704 and Rs. 872 respectively.

According to the sanctioned scheme, a sum of Rs. 6,600 only was provided towards the cost of machinery. including the equipment of the control laboratory, the incidental custom and transport charges and the complete installation of the machinery. Due to the international situation, the

prices of all kinds of metal have recently gone up and consequently the price of the same Canning Unit which was provided in the scheme at a cost of Rs. 1,620 has now been purchased for about 4,000 Flanger, motor for running the reforming machine and lye-peeling tank, essential features of any Canning unit, apart from several other small essential items which unfortunately were omitted in the scheme, cost another sum of Rs. 850. The can reforming and double seaming machines together accounts for another increase of about Rs. 20. Thus under machinery alone there is an increase of Rs. 3,250. If the increased price of the numerous other small items is added up, it will come to quite a lot.

In order to meet the situation, a revised scheme was submitted which was considered by a small Sub-Committee of the Advisory Board of the Imperial Council of Agricultural Research in May 1939 and it recommended as follows :—" We do not feel that it is fair to ask the Council to meet all this extra expenditure concerning which it has not been consulted but we suggest that as an act of grace the amount of additional expenditure on equipment (already incurred in excess of the sanctioned grant, approximately Rs. 3,000) might be met by the Council leaving it to the administration to meet the balance in the cost of building, water and electricity."

" We also recommend that for a year at least the recurring expenditure be kept within the Rs. 2,500 sanctioned by the Council and thereafter it may be seen how far this needs to be increased."

In view of the above recommendations, the total allotment for the scheme now comes to Rs. 49,600 *plus* Rs. 3,000 that is Rs. 52,600 in all. The Baluchistan Administration have now been pleased to sanction a total sum of Rs. 6,576 to meet the cost of providing the Canning Laboratory with water and electricity. As recommended by the Sub-Committee, recurring expenditure for 1939-40 will be kept within Rs. 2,500. Now that detailed figures have been worked out it is considered that this amount of Rs. 2,500 for working expenses is most insufficient to meet the needs of research work and consequently in the scheme which is now being submitted for the consideration of the Council, a sum of Rs. 5,000 only has been provided. It may be emphasized that this money when allotted will be spent entirely in the pursuit of research work only and that there is not the slightest idea of running the scheme on semi-commercial lines. The present canning unit is one of the smallest available in the market and is capable of a daily output of about 2,500 cans which means a capital expenditure of about Rs. 1,000 per day while only a sum of Rs. 5,000 is being asked for, for the whole fruiting season. Further whether the unit is used to its full capacity or not, charges on running the boiler particularly will be more or less the same as when the factory is running at its full capacity. It is realized that even if the output is reduced to a bare minimum, there will not be any proportionate reduction in running expenses.

A detailed statement of the expenditure incurred so far is given in Enclosure A. The immediate requirements of the Laboratory now are a steam jacketted stainless steel pan of 5 gallons capacity at a cost of Rs. 700, one small Filter press for Rs. 700 and a grape crusher for Rs. 180.

In the sanctioned scheme, no provision was made for any travelling allowance for the staff. It is now felt that a certain amount of touring

is most desirable if not essential and consequently a sum of Rs. 300 per annum only are now being provided in the revised scheme. Due to abnormal conditions after the earthquake and until the 31st March 1939, all non-gazetted officers employed at Quetta were given a compensatory allowance of 10 per cent. of their salaries. A compensatory allowance of Rs. 305 is, therefore, due to the Research Assistant for the year 1938-39. This was sanctioned by the Baluchistan Administration *vide* their endorsement No. A.|1 (35)-III-E.Q.-2762-F., dated the 10th March 1939, but has not so far been paid pending the approval of the Council. This sum is also included in the revised scheme.

A statement of expenditure for the five years of the scheme is given in Enclosure " B " and a tentative programme of research work in Enclosure " C ". It will be noticed that under this new revised scheme, the total expenditure during five years, excluding Rs. 6,576 contributed by the Baluchistan Administration towards water and electric supply, will come to Rs. 62,121-4-0 against Rs. 52,600 already sanctioned that is an increase of Rs. 9,521-4-0 in all.

It is requested that in the light of the explanation given, the revised scheme now submitted may kindly be sanctioned.

(Sd.) A. M. MUSTAFA,
Agricultural Officer
in Baluchistan.

ENCLOSURE " A ".

INITIAL EXPENDITURE INCURRED.

1938-39.

	Rs.	As.	P.
1. Can reformer, flanger and double seamer ..	1,542	0	0
2. Canning line	4,000	0	0
3. Laboratory (The bill is for Rs. 5,543|14|- ..	5,000	0	0
4. Boiler (Second hand)	600	1	0
5. Electric motor and starter	209	0	0
6. Balance and weight box	261	5	0
7. Beranger's scales	76	8	0
8. Hand tester for cans	53	12	0
9. Crown corking machine	85	0	0
10. Lye peeling tank	95	0	0
11. Monel metal sieve, vacuum gauge and can-opener.	61	2	0
12. One water bath	56	8	0
13. Aluminium vessels, buckets, etc. ..	'8	7	6
14. One cast iron pulley	25	0	0
15. Basket press for juice making.. ..	40	0	0
16. Knives, corers, peelers, etc.	30	15	0
17. Glass carboys 6	31	2	6
18. Tables, almirahs, etc.	123	12	0

	Rs.	AS.	P.
19. Apparatus, glassware, thermometers, hydro meters, etc.	372	2	9
20. Chemicals, sugar, coal and fuel, etc. ..	192	8	6
21. Cans, bottles, etc.	254	2	0
22. Books and journals..	144	12	0
23. Fixing up of machinery	548	0	0
24. Customs and wharfage on machinery ..	453	1	0
25. Railway freight, etc., on machinery, apparatus, etc.	434	1	9
26. Miscellaneous small items	5	0	0
	14,753	5	0
1939-40.			
27. Sutax sealing tongs, one pair	75	0	0
28. Cost of Laboratory (Completing the payment).	544	0	0
Total ..	15,372	5	0

ENCLOSURE B.

Revised Canning and Fruit Preserving Research Scheme, Quetta, Baluchistan.

Statement of expenditure for the five years 1938-39 to 1942-43.

Particulars.	1938-39.	1939-40.	1940-41.	1941-42.	1942-43.	Total.	Remarks.
Pay of Staff.							
(1) *Pay of Research Assistant 250—25—350.	3,015-13-0	3,600	3,900	4,200	4,200	18,915-13-0	*The Research Assistant is a highly qualified person and consequently the Baluchistan Administration appointed him on an initial salary of Rs. 275 instead of Rs. 250. During the fifth year of the scheme no provision is made for his increment but it is recommended that this may be favourably considered by the Council.
(2) Pay of one Laboratory Assistant 50—5—75.	..	600	660	720	780	2,760-0-0	
(3)† Pay of one Mechanic @ Rs. 50 p.m.	..	..	600	600	600	1,800-0-0	
(4)‡ Pay of one Laboratory Attendant @ Rs. 20 p.m.	..	240	402	240	240	960-0-0	† It is not possible to get a part time mechanic @ Rs. 40 p.m. One @ Rs. 50 p.m. is now provided for the whole year.
II. Allowances.							
(1) § Travelling allowance ..	228-2-0	300	300	300	300	1,428-2-0	‡ A Laboratory Attendant for the whole year is essential.
(2) ‖ Compensatory allowance ..	305	..	..	..	..	305-0-0	§ A certain amount of travelling for the technical staff is essential.
Total of pay and allowances	3,548-15-0	4,740	5,700	6,060	6,120	26,168-15-0	‖ This is compensatory allowance for 1938-39 only.

Particulars.	1938-39.	1939-40.	1940-41.	1941-42.	1942-43.	Total.	Remarks.
III. INITIAL EXPENSES (Non-recurring).	14,753-5-0	* 619 (plus) 1,580 2,199	..	..	..	16,952-5-0	* Amount already spent. (See Appendix "A").
IV. CONTINGENCIES.							
(1) Temporary labour during the fruit season.	..	..	500	500	500	1,500-0-0	This is instead of the four temporary laboratory workers provided in the sanctioned scheme.
(2) Working expenses	..	2,500	5,000	5,000	5,000	17,500-0-0	
Total ..	18,302-4-0	9,139	11,200	11,560	11,620	62,121-4-0	

Amount sanctioned in the original scheme	Rs. 49,600	
Additional amount sanctioned in May 1939	Rs. 3,000	
Total	Rs. 52,600	Rs.
Total expenditure for 5 years in the revised scheme		62,121-4-0
Amount sanctioned		52,600-0-0
Net amount required		9,521-4-0

ENCLOSURE " C ".

TENTATIVE PROGRAMME OF WORK.

I. Canning Experiments.

1. Varietal Canning trials with apricots, peaches, plums, pears, cherries strawberries, etc., etc.

2. Determination of the percentage distribution of various size, grades and their availability for canning.

3. Collection of preliminary physico-chemical data such as average size, colour, flavour, acidity, sugar content, etc.

4. Attempt to determine the proper " Canning ripe " stage for some of the well-known varieties of apriocots and peaches.

5. Standardisation of syrup strength, range of fill, time of exhaust, process and colling for a few varieties of apricots and peaches.

6. Cut out tests for the various experimental trials.

7. Study of the effect of addition of acid, flavour, colour, etc., during canning.

II. Fruit Juices and Syrups.

1. Attempt to utilise cull fruit left during Canning.

2. Standardisation of a method for preparing an attractive beverage from pomegranates. The previous year's experiments will be extended with particular reference to the flavour and taste of the product.

3. Preparation of grape juice, cordial and syrup from the Kishmish grapes.

4. A preliminary biochemical study of the ripening changes in a few of the important varieties of grapes under growing trial. Important data with particular reference to the changes in size, acidity, sugar content, total solids etc., will be collected so as to be able to correlate physico-chemical data with the quality of the final product. This aspect of the work will be deligently pursued during all our research work.

5. Attempt to accelerate the sedimentation of argols from stored grape juice by physical and chemical means.

6. Preparation of a suitable leverage-juice, syrup or squash from cherris, peaches, raspherries, mulberries, etc., etc.

7. Preparation of tomato juice and tomato cocktail.

III. Fruit products like Jams, Jellies, etc.

1. Standardisation of the technique for preparing a good jam from apricots, plums, pears and peaches.

2. Preparation of the local " murabas " from apples, quinces, etc.

3. A sutdy of the use of cull apples as a source of pectin for preparing jams from apricots, etc., which require added pectin to form a good jam.

4. Preparation of tomato ketchup.

IV. Drying of fruits.

1. The investigation of the previous year relating to the preparation of good dried product from Kishmish and Haitha grapes will be continued. Preliminary experiments with sulphuring and dehydration under controlled conditions of temperature, humidity and light intensity will be undertaken with a view to prepare a good dried product. It is proposed to undertake this work on a fairly large scale.

2. Preliminary experiments on the Sun drying and dehydration of apricots and peaches.

V. Miscellaneous Experiments.

1. A study of the course of fermentation of grape juice by well-known strains of yeast like the Champagne and Tokay yeasts with a view to prepare a suitable fermented beverage from grapes.

2. Preparation of vinegar from cull grapes and other fruits.

3. Preparation of a sweet chutney from apricots.

4. Preliminary experiments on the candying, crystallisation and glacing of apricots, plums, cherries, etc.

5. Preparation of apple juice, fermented and non-fermented.

6. A preliminary study of the economics of the various important fruit products prepared.

ANNEXURE II.

EXTRACTS FROM THE PROCEEDINGS OF THE ADVISORY BOARD MEETING HELD IN MAY 1939.

* * * * * * *

ITEM 5 (2).

Technical programme of the Baluchistan Fruit Canning Scheme.

Mr. Richards said that certain items of the programme such as preparation of tomato juice, ketchup, and fruit juices had already been investigated at Lyallpur and there was no further necessity of repeating the work on these products at Quetta. The biochemical study required a well-qualified staff and in the absence of some such staff the item should be dropped. Sardar Lal Singh said that the programme of work was very extensive and could not be accomplished by the staff provided for and within the scheduled time. Certain items of work such as (2) standardisation of a method for preparing beverages and preliminary studies of the ripening changes in important varieties, etc., fell more appropriately within the jurisdiction of the field staff and not that of the bio-chemist. By way of information he indicated that pomegranate juice had been used for blending purpose in America.

* * * * * * *

Mr. Stewart said that it appeared from the technical programme that it was proposed to undertake a variety of different operations which included the whole range of fruits grown in Baluchistan for canning. It was a programme of work not for one year but for 20 years. The staff

sanctioned was inadequate to tackle this huge programme. He recommended that the technical programme should be reduced materially and that the work should be confined to one or two items only, commensurate with the limits of the competence of the staff.

* * * * * * *

Dr. Nazir Ahmad agreed that so far as future expenditure was concerned, the programme should be curtailed and the expenditure should be kept down as far as possible.

APPENDIX XIII.

Note on Subject No. 10 (a) :—Application from Dr. S. N. Das Gupta of the Lucknow University for a recurring grant of Rs. 25,633 spread over three years.

A letter from the Government of the United Provinces forwarding a revised scheme for research on the necrosis of the mango fruit in India is appended (*Annexure I*). *The scheme has been recommended by the provincial* Agricultural Research Committee. The scheme involves a recurring grant of Rs. 25,633 spread over a period of three years. The University will provide full research facilities. The total contribution of the University in addition to laboratory facilities is estimated at Rs. 15,000.

2. It will be recalled that the Advisory Board at its meeting held in November 1938 considered the original scheme (much wider in scope) and made the following recommendations with the advice of the Entomological and Pathological Committee and the Fruits Sub-committee :—

(*i*) The scheme should be referred back with the suggestion that a very modest scheme would meet the necessities of the case.

(*ii*) In the revised scheme, survey should be given a prominent place which should occupy practically the whole of the activities of the scheme in the first year.

Relevant extracts from the reports of the Committees and of the Board are appended. (Annexure II.)

3. The scheme will first be examined by the Entomological and Pathological Committee and the Fruits Sub-Committee of the Board whose reports will be circulated in due course.

ANNEXURE I.

COPY OF A LETTER FROM THE DEPUTY SECRETARY TO GOVERNMENT, UNITED PROVINCES, AGRICULTURE DEPARTMENT, TO THE SECRETARY, IMPERIAL COUNCIL OF AGRICULTURAL RESEARCH, NEW DELHI, NO. 3272 A/XIIA, DATED THE 24TH AUGUST 1939.

SUBJECT.—*Scheme for research on the necrosis (black tip disease) of the mango fruit in India.*

With reference to the correspondence resting with this Government's telegram No. 1932, dated May 8, 1939, on the above subject, I am directed to forward, for the consideration of the Imperial Council, a copy (with 199 spare copies) of the application from Dr. S. N. Das Gupta, Ph.D., D.I.C., of Lucknow University, for a total (recurring grant of Rs. 25,633) spread over three years for research on the necrosis of the mango fruit in India. The Scheme has been revised in accordance with the recommendations of the Advisory Board, forwarded with your letter No. F. 52/41/38-A, dated January 26, 1939 and the revised scheme was considered by the United Provinces Agricultural Research Committee at its last meeting. A copy of the Committee's recommendation is enclosed for your information.

2. I am now to request that the application may kindly be placed for consideration before the Advisory Board at its next meeting.

COPY OF RESOLUTION NO. 7 IN THE 16TH MEETING OF THE UNITED PROVINCES AGRICULTURAL RESEARCH COMMITTEE HELD AT THE COUNCIL HOUSE, LUCKNOW, ON AUGUST 10, 1939.

Agenda.	Resolution.
7. Consideration of an application from Dr. S. N. Das Gupta, Ph.D., D.I.C., Lucknow University, Lucknow, to the Imperial Council of Agricultural Research for a grant of Rs. 25,633 spread over three years for investigations on the Black Tip disease of mango in the United Provinces, revised in the light of the recommendations made by the Imperial Council of Agricultural Research.	7. Resolved that the scheme be recommended to the Imperial Council of Agricultural Research.

ANNEXURE II.

6. APPLICATION FROM DR. S. N. DAS GUPTA, PH.D., READER IN BOTANY, LUCKNOW UNIVERSITY, FOR A TOTAL GRANT OF RS. 53,918 SPREAD OVER THREE YEARS FOR THE INVESTIGATION ON NECROSIS (BLACK TIP) OF THE MANGO FRUIT. [SUBJECT NO. 6 (*i*) OF THE AGENDA OF THE ADVISORY BOARD.]

Extract from the proceedings of the Entomological and Pathological Sub-Committee meeting held on 23rd November 1938.

* * * * * * * * * *

Dr. Uppal said that disease of the same nature occurred in Bombay but it was different from the disease found in the United Provinces. The evidence advanced for the virus origin of the disease was very scanty and if at all it was of virus origin, the staff demanded for the purpose was too large. Dr. Padwick said that thorough survey of the area where the disease existed was the first essential to give a line of action to work upon. This should be carried out and that problem defined first. Dr. Uppal said that it was really an investigation for a physiologist and not for a plant pathologist.

* * * * * * * *

Extract from the proceedings of the Fruit Sub-Committee meeting held on 23rd November 1938.

* * * * * * * * * *

The Sub-Committee endorsed the recommendation of the Entomological and Pathological Sub-Committee that the scheme should be referred back with the suggestion that a very modest scheme was all that was required to meet the necessities of the case and that in such a scheme, survey should be given a prominent place which should occupy practically the whole of the activities of the scheme in its first year.

* * * * * * * * * *

Extract from the proceedings of the Advisory Board meeting held on 26th November 1938.

The Board accepted the recommendation of the Sub-Committee that th scheme be referred back for reconsideration in the light of the discussion and that a modest scheme was all that was required to meet the necessities of the case.

An application from Dr. S. N. Das Gupta, Ph.D. (London), D.I.C., Reader in Botany, Lucknow University, to the Imperial Council of Agricultural Research for a total recurring grant of Rs. 25,633 spread over three years, for investigations on the "black tip disease" of mango in the United Provinces, revised in the light of the recommendations made by the Imperial Council of Agricultural Research.

I.—INTRODUCTION.

The black tip disease (necrosis) of the mango fruit is definitely known to occur in at least two important mango-growing provinces of India, namely, Behar and the United Provinces. Its occurrence in other provinces is uncertain.

In the United Provinces the damage due to the disease is very considerable involving very large sums of money. In certain orchards, the entire mango crop is affected, in many others, even if the damage is not as great, the growers sustain a very heavy loss every year.

A thorough investigation of the black tip disease of the mango fruit, with a view to control the disease, is an urgent necessity for the welfare of the mango cultivation.

The problem is being investigated by the applicant with the help of two of his research students, Mr. G. S. Verma, M.Sc., and Mr. S. Sinha, M.Sc., at the botanical laboratory of the Lucknow University. The investigation is progressing very slowly owing to the limited resources of the department. It is felt that a grant-in-aid from the Imperial Council of Agricultural Research will greatly facilitate the working of the problem.

Work done.

One paper entitled "Preliminary Observations on the Necrosis of the Mango Fruit with Special Reference to the External Symptoms of the Disease" has been published in the proceedings of the Indian Academy of Sciences, Vol. IX, January 1939.

The paper deals primarily with the external symptoms of the black tip disease (necrosis). The earliest external symptom of the disease is the aetiolation of the distal end of the fruit. Later on grey spots of indefinite outline make their appearance in the aetiolated areas, gradually turn brown in colour and coalesce. In the case of a more severe attack, the entire tissue thus affected collapses, exposing the stone of the fruit or leaving a more or less thin layer of collapsed tissue over it. This is particularly prominent in *Dasehri*, *Safeda* and certain *Tukhmi* varieties. The necrotic area remains restricted usually to about a quarter of the size of the fruit. The rest is not directly affected.

At an early stage of the disease, the necrotic area shows *gummosis*, the extent of exudation of gum depending upon the variety.

The result of our limited survey of the orchards in the neighbourhood of Lucknow showed that black tip is common in orchards situated in the vicinity of brick kilns.

Susceptibility of the disease varies with the variety, *Dasehri* being the most susceptible

There is also a real difference in the susceptibility within a variety.

Lack of vigour of the tree seems to be a contributory cause of the incidence of the disease.

It has not so far been possible to isolate any fungus or bacterium from the diseased part. Apparently the black tip is not due to these organisms.

Work in progress.

The following investigations are being carried out to find out the immediate cause of the disease. Some very interesting results have been obtained. Some of the results will be published shortly :—

(1) *Effect of brick-kiln fumes on the healthy mango fruit.*—A miniature brick-kiln was started in the mango orchard of the Government Horticultural Garden, Luchnow, which is free from black tip. The fumes emanating from the kiln pervaded the whole atmosphere, but no black tip appeared. A direct application of fumes also had no effect. The result must be confirmed by further work.

(2) *Effect of injecting healthy mango fruits with extracts from the necrotic tissue.*—A large number of healthy mangoes of different varieties, particularly *Dasehri* and *Safeda,* have been experimented with. A certain percentage of injected fruits showed disease similar in appearance to black tip. The results obtained in 1938 have been confirmed by the experiments of 1939.

(3) *Effect of SO_2.*—Various doses of SO_2 were applied to the mangoes growing on trees. Spots appeared which were quite unlike the black tip.

(4) *Effect of CO.*—Preliminary experiment fails to show any effect. Results are to be confirmed by further work.

(5) *Effect of ethylene.*—This chemical does not cause the disease but hastens ripening the fruit.

(6) Cuticular study of the disease and healthy parts of the fruits.

(7) Pathological anatomy of the diseased fruit in order to find out the first internal symptom of the disease.

II.—The Scheme.

It is popularly believed that the necrosis is due to the fumes emanating from brick-kilns. The limited survey made by the applicant also shows that the disease is prevalent in orchards where there are operating brick-kilns in the vicinity. The preliminary experiment with a miniature brick-kiln (5 feet diameter and 5 feet high), as already stated, showed that kiln fumes do not produce black tip disease. The result must be confirmed by large scale investigation extending over at least three seasons using larger kilns and starting fumigation well before the blossoms appear.

The lines of investigation proposed in the present scheme are designed primarily to elucidate this point.

These are :—

A. Survey.

B. Soil analysis.

C. Effect of combustion fumes.

D. Effect of injecting healthy mango fruits with extract from necrotic tissue.

A.—*Survey.*

Several mango-growing areas should be surveyed to ascertain—

(1) the number of orchards situated near brick-kilns,

(2) the distance of the orchards from the brick-kilns,

(3) the position of the orchards in relation to brick-kilns,

(4) the number of orchards in the vicinity of brick-kilns affected by the disease,

(5) the number of orchards in the vicinity of brick-kilns *not* affected by the disease,

(6) if the disease at all occurs in orchards where there is no brick-kiln in the neighbourhood.

B.—*Soil analysis.*

Soils at the active root regions of plants bearing diseased and healthy fruits should be analysed and compared to ascertain if the disease could be correlated to the soil conditions. The analysis of soil will be carried out for two years only under the following heads :—

(1) Mechanical analysis of soil (sand, silt and clay) by the International Method.

(2) Soil moisture.

(3) Water holding capacity.

(4) pH. value.

(5) Organic carbon.

(6) Nitrogen content.

(7) Percolation test under natural conditions on soil monoliths whenever feasible.

C.—*Effect of combustion fumes.*

Detailed study of the effect of brick-kiln and other combustion fumes on the healthy mango fruits should be undertaken.

It would be necessary to carry on fumigation of mango trees from a date well before the time of blossoming to the time when fruits mature in orchards where the disease has never been recorded before.

D.—*Effect of injecting healthy mango fruits with extract from necrotic tissue.*

Detailed work to be carried out with a number of varieties using the method evolved for the purpose.

The investigation will be carried out by research assistants under the direct supervision of the applicant who will be responsible to the Indian

Council of Agricultural Research for all work relating to the scheme. Botanical aspect of the work will be done at the Botany Department, Lucknow University. Soil analysis will be done at the Agricultural College, Cawnpore, under the direct supervision of Dr. B. K. Mukerjee, D.Sc., Agricultural Chemist to the Government of the United Provinces who has kindly consented to co-operate with the applicant.

Contribution of the University.

The University is ready to extend full research facilities. Almost all the apparatus of the Botany Department will be at the disposal of the research workers carrying out the investigation. The Botany Department will also supply gas and electricity. The total contribution of the University in addition to the laboratory facilities may be estimated at Rs. 15,000.

RECURRING GRANT.

Table showing the details of the recurring grant required.

STAFF.	I Year.	II Year.			III Year.		Total.
	Rs.	Rs.	Rs.	Rs.	Rs.	Rs.	Rs.
*Senior Botanical Research Assistant, 1, Rs. 150—10—200	150×12	1,800	160×12	1,920	170×12	2,040	5,760
*Junior Botanical Research Assistant, 1, Rs. 110—10—150	110×12	1,320	120×12	1,440	130×12	1,560	4,320
†Chemical Research Assistant (Cawnpore), 2, Rs. 80—5—150	80×12×2.	1,920	85×12×2.	2,040	..	..	3,960
Laboratory Assistant, 1, Rs. 40—2—60 ..	40×12	480	42×12	504	44×12	528	1,512
Laboratory attendants (Cawnpore), 2, Rs. 11—½—17	11×12×2.	264	11½×12×2.	276	..	..	540
Laboratory attendants, 2, Rs. 15—½—20 ..	15×12×2.	360	15½×12×2.	372	16×12×2.	384	1,116
Travelling allowance for the staff	..	500	..	500	..	500	1,500
Glassware, chemicals, apparatus, fuel, etc. ..	..	1,000	..	1,000	..	500	2,500
Contingent	..	300	..	300	..	300	900
Diseased orchard near a brick kiln, 1 ..	..	175	..	175	..	175	525
Healthy orchard away from brick-kiln (each Rs. 500), 2	..	1,000	..	1,000	..	1,000	3,000
GRAND TOTAL ..	..	9,119	..	9,527	..	6,987	25,633

*The grades given here are those sanctioned for the scheme of Dr. B. N. Singh of the Benares Hindu University. If any revision in the grades has since been made by the Imperial Council of Agricultural Research the applicant is ready to accept the revised scales of pay for his research assistants.

†Grades for United Provinces Subordinate Agricultural Service, Group II.

Duties assigned to the research staff.

1. Senior botanical research assistant.	(i) Effect of combustion fumes. (ii) Effect of injecting healthy mango fruits with extract from necrotic tissue.
2. Junior botanical research assistant.	Survey.
3. Chemical research assistant	Soil analysis.

APPENDIX XIV.

Note on Subject No. 10 (b) :—Application from the Government of Bengal for a grant of Rs. 29,444 for a scheme for research on the cyto-genetics of—

I. Mangifera indica, including the cultivated mangoes ;

II. Musa paradisiaca var, sapientum, including the cultivated bananas, by Professor S. P. Agharkar of the Calcutta University.

At its meeting held in March 1938, the Advisory Board considered a scheme by Professor S. P. Agharkar of the University of Calcutta, for research into the cyto-genetics of Musas (bananas) of Bengal and adjacent areas. The Board recommended that the scheme should be referred back and that if it were put up again, it should be presented in accordance with Sir John Russell's recommendations (*vide* page 215 of the Report) concerning schemes suitable for being carried out at the Universities.

2. The Government of Bengal have now forwarded a revised scheme by Professor Agharkar (Annexure) involving an expenditure of Rs. 29,444 spread over a period of five years. The contribution of the Calcutta University will be the accommodation and the use of their laboratory facilities and special apparatus, in addition to supervision and co-operation from the University staff.

3. The scheme will, in the first instance, be considered by the Fruit Sub-Committee whose recommendations will be submitted to the Board in due course.

ANNEXURE.

A SCHEME BY PROFESSOR S. P. AGHARKAR FOR RESEARCH ON THE CYTO-GENETICS OF—

(I) MAHGIFERA INDICA, INCLUDING THE CULTIVATED MANGOES.

(II) MUSA PARASIDICA VAR. SAPIENTUM, INCLUDING THE CULTIVATED BANANAS.

In his report on the work of the Imperial Council of Agricultural Research in applying science to crop production in India Sir John Russell (1937) recommended that the Council's programme of work should be lightened by handing over to the Universities all investigations of a scientific or non-technical nature and setting aside a certain portion of the grant for this purpose. He further was of opinion that the grants made by the Council to the Universities should be primarily for the purpose of fostering research in subjects allied or basic to agricultural science and practice and for training graduates in research methods, but the investigations should not be required to have direct application in agricultural practice.

In dealing with the scheme for investigation on the Cytology of Indian Crops put forward by the Imperial Institute of Agricultural Research, New Delhi, Sir John Russell said, " The question of supporting cytological investigations at a University was on a different footing. These might result in new knowledge of the principles of cytology and,

of course, they would stimulate the training of men and women in the subject and so would indirectly benefit agriculture.".

In view of the above recommendations it is proposed to undertake cyto-genetical research on (1) *Mangifera indica* including the cultivated mangoes, and (2) on *Musa parasidica* including the cultivated bananas at the Botanical Laboratory of the Calcutta University. In both cases the allied species will also be studied to some extent.

Although the primary object of both the investigations is of a scientific nature it is expected that the results will have an important bearing on practical horticulture.

The details of the scheme are as follows :—

(I) *On the cyto-genetics of* Mangifera indica *and the cultivated mangoes.*

The genus *Mangifera* contains about 30 species which are natives of the Eastern Himalayas, the Malay Peninsula and neighbouring islands and Africa. Of these *Mangifera indica* is believed to be the progenitor of the cultivated mango.

Not much is known about the genetics of *Mangifera* species, nor about that of the cultivated mangoes. Nothing is known regarding the genetical relationships of the different species of *Mangifera,* the origin of the cultivated mango from its wild progenitor, and of the later varieties from pre-existing varieties by hybridisation and mutations, including the bud-aports.

It is proposed to elucidate these points by studying the cyto-genetics of *Mangifera* including the cultivated mangoes and corelating the results with the morphological and physiological behaviour of the species and its varieties.

Apart from its scientific importance, the work will be of great use to the systematist for classifying the mangoes and to the mango-breeder.

The Botany Laboratory of the Calcutta University, having ample facilities for cytological and systematic work and having a good reference library attached to it is a very suitable place for this work. The department has a herbarium of its own in addition to which the herbarium of the Royal Botanic Gardens, Sibpur, and that of the Botanical Survey of India are available for reference.

The University has already started the work and Professor S. P. Aghakar has put Mr. B. Roy, M.Sc. (Cal. & Lond.), who received his training at the John Innes Horticultural Institution in charge of it. The cytological investigations of some mango varieties and some species of *Mangifera* has been started this season. The results obtained up to now show variation in chromosom number of the varieties from 6 (heploid no.) in Alphonso (Poona) and Langra, to 7 or 8 in three other varieties studied.

(C. F. note published in Science and Culture, September 1939.)

(II) *On the cyto-genetics of* Musa *including the cultivated bananas.*

Cyto-genetical studies of *Musa* and of the cultivated bananas have received attention from many investigators, namely, Tischler, D'Angremond, White, Cheesman and others. Polyploidy was found to be very

common among the cultivated bananas, and meiosis very irregular specially in the sterile pathonocarpic forms with consequent low pollen fertility. White, who chiefly used root tips for cytological studies of bananas, observed an excellent polyploid series in about 150 varieties of *Musa* and held that the basic heploid number of chromosomes in bananas was 4 and that the common condition in edible bananas is octoploid. He also recorded that the series is not euploid, counts of 18, 22 and 23 chromosomes also having been made.

Cheesman examined somatic divisions in root tips and meiosis in pollen mother cells of the cultivated varieties of bananas and other species of *Musa* and of the hybrids between them. He holds that the polyploid series in *Musa* consists of 22, 33, 44 or a multiple of 11 chromosomes and hence 11 is the basic number. He examined an Indian variety of edible banana called "Mysore" which showed 33 somatic chromosomes.

In studying meiosis in a cultivated banana called "Gross Michel", White holds that at diakinesis there are eight unpaired chromosomes and twelve pairs. On examining the same variety Cheesman reports the occurrence of various associations of monophase chromosomes of which trivalents are more common.

It is, therefore, desirable that further research work is conducted on the cyto-genetics of *Musa* for which the cultivated varieties of banana and the wild species of *Musa* available in India will provide very suitable material.

The morphology and cytology of bananas was being studied in Botany Laboratory of the University of Calcutta for the last few years under the direction of Professor S. P. Agharkar. In 1934, he deputed Mr. P. N. Bhaduri, one of the Ghose Research Scholars, for this purpose. Mr. Bhaduri and Professor Agharkar (1935) reported variation in the chromosome numbers of some *Musa* cases. Soon after the publication of this paper the work was interrupted owing to Mr. Bhaduri's appointment as assistant lecturer in Botany in the Calcutta University and subsequent deputation to Europe for further studies.

It is now proposed to resume the work. Apart from their scientific interest the cyto-genetical studies of Indian bananas are likely to be of great practical importance for breeding new varieties of bananas.

Duration of the Scheme.

Although preliminary results would be obtained in about 3 years, it will not be possible to obtain definite results in less than five years. It is therefore proposed that the scheme should be sanctioned for five years.

Contribution by the University of Calcutta.

The University has already spent over Rs. 3,000 in connection with preliminary work on cytology and morphology of the bananas. It has also spent some money for the cytological work on mangoes which is in progress. The University will provide (a) the space, and (b) the laboratory facilities including the use of such ordinary and special apparatus such as microtome, camera licide, embedding baths, photomicrographic apparatus and the necessary supply of gas, electricity and water. Some land will be available for growing the necessary material.

Further as the work will be carried out under the direct supervision of the members of the University staff, and with their active co-operation and help, this may be considered to be an *ad quo* contribution by the University for this purpose.

Finance for the Scheme.

In view of the money already spent by the University of Calcutta, it is expected that the Imperial Council of Agricultural Research will kindly finance this scheme for the completion of the unfinished banana work and for the continuance of the mango work which has just been started.

Staff.

It is proposed to appoint one assistant cytologist on a salary of Rs. 140—10—250 for the banana work and one assistant cytologist on a salary of Rs. 140—10—250 for the mango work. A laboratory boy on Rs. 20—1—25 per month and a mali on Rs. 15—1|3—20 per mensem will also have to be appointed.

Contingent expenditure for stains, reagents, slides, cover-glasses, slide boxes and trays, pots, plants, manures and chemicals including the cost of special works of reference of about Rs. 800 per annum will have to be provided for.

A sum of Rs. 500 per annum will have to he provided for travelling expenses for collecting material.

A non-recurring grant of Rs. 1,500 will be required for two research microscopes for the two assistant cytologists, all other equipment being available in the University Laboratory.

The total expenditure for the scheme is shown as under :—

Statement of the total expenditure for the Scheme.

	Particulars.					
	1st year. Rs.	2nd year. Rs.	3rd year. Rs.	4th year. Rs.	5th year. Rs.	Total. Rs.
I.—*Recurring.*						
1. Assistant Cytologist for mango work (Rs. 140—10—250).	1,680	1,800	1,920	2,040	2,160	..
2. Assistant Cytologist for Bananas (Rs. 140—10—250).	1,680	1,800	1,920	2,040	2,160	..
3. Laboratory Boy (Rs. 20—1—25).	240	252	264	276	288	..
4. Mali (Rs. 15—1/3—20)	180	180	180	192	192	..
5. Travelling Expenses ..	500	500	500	500	500	..
6. Journals and works of reference and contingencies including manures, plants, chemicals, stains, reagents, slides, cover-glasses, slide-trays, pots etc.	800	800	800	800	800	..
	5,080	5,332	5,584	5,848	6,100	27,944

II. Non-recurring.

	Rs.
Two Compound Research Microscopes (one for each assistant Cytologist) ..	1,500

Grand Total.

	Rs.
I. Recurring	27,944
II. Non-recurring	1,500
	29,444

APPENDIX XV.

Note on Subject No. 10 (c) :—Application from the Government of the North-West Frontier Province for a grant of Rs. 44,940 spread over five years for a scheme of research work on fruit and vegetable drying.

A scheme received from the Government of the North-West Frontier Province for research work on Fruit and Vegetable drying is appended (Annexure). It involves a recurring expenditure of Rs. 44,940 for five years to the Imperial Council of Agricultural Research. It has not been possible to examine whether the scales of pay proposed are the standard scales of pay for the province. An enquiry regarding this has been made and the reply, if received in time, will be circulated.

2. The scheme will first be considered by the Fruits Sub-Committee, whose report will be submitted to the Board in due course.

ANNEXURE.

LETTER FROM H. P. TOLLINTON, ESQ., I.C.S., SECRETARY TO GOVERNMENT, N.-W. F. P., DEVELOPMENT DEPARTMENTS, No. 33593-D.D.|17|265-T.D., DATED PESHAWAR, THE 12TH SEPTEMBER 1939.

I am directed to forward herewith a scheme of "Research work on Fruit and Vegetable drying" prepared by the Agricultural Officer, North-West Frontier Province. The scheme will be spread over a period of 5 years and has been prepared on a fifty-fifty basis. It is requested that the scheme may kindly be placed before the Advisory Board for their approval and necessary fund allotted in due course.

A Scheme for Research Work on fruit and vegetable drying.

The work on fruits, at the Tarnab Farm, brought out the potentialities of fruit cultivation, to the cultivators of N.-W. F. Province. It was also soon evident to them that fruit farming was the most paying line in Agriculture. With this realisation, the area under fruits, in the Province, increased rapidly. The growers started to experience difficulties, in the disposal of their produce. The prices of fruits fell to such a level that peaches which in previous years were selling at about Rs. 10 a maund, by 1935 fetched only Rs. 2 per maund.

With improvements in the methods of disposal and distribution of fruits the conditions slightly improved, but the position has not materially altered. It is clear that reorganisation of marketing alone is not the remedy for the situation which has persisted since 1935. The surplus fruit needs to be removed from the market and means for its profitable utilisation to be discovered.

In California, 20 per cent. of its fruits is disposed off in a fresh condition, 15 per cent. in canned and the remaining 65 per cent. is dried. The surplus fruit of this Province will similarly need to be canned or dried.

The canning of fruits has certain handicaps. It requires expensive equipment and the services of specialists. The cans are very costly in India, and sugar is dear. The freight charges for transport are high. On the other hand drying of fruits is cheaper, transport charges are less and the process can easily be manipulated, even by laymen, once learnt. It is clear, that only a part of our fruits could be canned and that drying would prove more suitable for Indian conditions.

India imports annually worth Rs. 9 lakhs of dried fruits from Afghanistan. It should not be difficult to capture this home market. England imports dried fruits, to the tune of over £8 millions worth, from foreign countries. Samples of dried fruits sent from Tarnab Farm to England, were favourably commented upon, by the trade in that country. For being Empire product it should be possible to capture a part of the English Market. This shows that markets for our dried fruits already exist.

North-West Frontier Province produces a large variety of fruits. Peaches, plums and pears are grown in Peshawar and Mardan, apricots in Hazara, grapes in Sh. Mohammadi, Figs in Bannu, Dates in D. I. Khan, Citrus in Mardan, Charsadda and apples in Kurram. All these fruits could be utilised in one form or another for drying purposes. What a rich variety of material to work upon ?

This is the only Province in India, where at the Tarnab Farm, some work has been done on the drying of fruit. A number of existing peach, plum and pear commercial varieties have been found suitable for drying. The peach harvest coincides with the monsoon season and under the humid conditions their sun drying cannot be successfully undertaken. For their drying a dehydrator is being installed at the Tarnab Farm. Pears which ripen after the monsoon-season can successfully be sun dried. Detailed investigations on the drying of fruits by the two methods need to be conducted. Besides fruits work on drying of vegetables will constitute important problems to be solved.

Investigations on human nutrition have shown the importance of fruits in human diet. The physicians are emphasising their value on health. In this country fruit supply is not evenly distributed throughout the year. In times of plenty they are cheap and are eaten by the masses. In times of scarcity it is a luxury which only the rich can afford. If surplus fruit is dried, in fruiting season, it could be sold at cheap rates when not available in fresh condition. This will go a long way to preserve the health of the nation. Fruit drying is therefore a national problem and work on it should be taken up in the interest of the health of the nation as a whole.

There is another important aspect of the problem. There exists a state of uncertainty in international affairs. War may flare up at any moment. Fruits and vegetables must be supplied to the men on the front, in the interest of their health. This would only be feasible in dried form.

The Government of North-West Frontier Province has been very much interested in the development of the fruit preservation industry of the Province. A canning Laboratory during the last five years, has slowly been built up, at the Tarnab Farm, which has reached the stage

that in a semi-commercial way, at present it has achieved the following annual output :—

2,000 tins of canned Peaches.
1,000 tins of canned Asparagus.
250 tins of canned Plums.
200 tins of canned Apricots.
100 tins of canned Pears.
150 tins of canned Peas.
800 tins of canned Marmalades.
200 tins of canned Peach Jam.
500 bottles of Orange Squash.
1,000 bottles of Lemon Squash.
500 tins of Tomato Ketchup.
400 bottles of Tomato Juice.
1,500 lbs. of dried peaches.
1,000 lbs. of dried pears.

This is no small achievement by itself. It is probably one of the biggest producing Government Fruit Preservation Laboratories in India. This is therefore the line in which the department and the Local Government need encouragement.

The staff of the Fruit Preservation Laboratory, Tarnab, is low paid and ill qualified. There are consequently a large number of problems connected with the canning of peaches, the making of marmalade and the preparation of squashes which require to be tackled and solved. It is felt that this could only be done by a properly qualified expert in the line.

The Scheme is primarily drawn up for work on fruit drying, but it is contemplated that the Expert provided should also supervise the work of the Canning Laboratory, Tarnab. Not only, will this go to improve upon the work in progress in N.-W. F. Province but could also help to verify the results of some of the problems conducted at the Fruit Canning Laboratory, Quetta.

In view of the above facts, the Imperial Council of Agricultural Research is requested to finance this Scheme for a period of five years, the details of which are given below :—

The Scheme, if approved, will function, at the Tarnab Farm, N.-W. F. Province.

The problems to be investigated are :—

1. Investigations into the suitability of different varieties of fruits and vegetables, for drying purposes.
2. Standardization of the processes of drying for various fruits and vegetables.
3. To investigate into the comparative value of artificial and sun drying, under local conditions.
4. To evolve a cheap kiln drier, for use in villages.
5. Standardisation of the finishing of the product in comparison with the imported brands of good reputation, for different types of markets within and outside India.

Finance.

A.—*The I. C. A. R. is requested to make this contribution.*

Recurring Expenditure.

	1st year.	2nd year.	3rd year.	4th year.	5th year.
	Rs.	Rs.	Rs.	Rs.	Rs.
One Fruit Preservation Expert, Gazetted post, grade 300—25—400	3,600	3,900	4,200	4,500	4,800
One Biochemist grade 150—10—190 ..	1,800	1,920	2,040	2,160	2,280
One Laboratory Assistant 30—1—35 ..	360	372	384	396	408
One Clerk 50—4—110	600	648	696	744	792
One Peon Rs. 14 p. m.	168	168	168	168	168
Contingencies	1,000	1,000	1,000	1,000	1,000
Travelling Allowance	500	500	500	500	500
Total ..	8,028	8,508	8,988	9,468	9,948
Grand Total ..			44,940		

B.—*Expenditure by N.-W. F. Province Government.*

	Rs.	A.	P.
1. Expenditure already incurred on buildings and equipment	10,000	0	0
2. Expenditure incurred on installation of a dehydrator approximately	10,500	0	0
3. Recurring expenditure for the next five years incurred by the Provincial Government :—			

	1st year.	2nd year.	3rd year.	4th year.	5th year.
	Rs.	Rs.	Rs.	Rs.	Rs.
One 'A' grade Asstt. 100—10—300 less 15 per cent.	1,020	1,128	1,236	1,356	1,464
One 'B' grade Assistant 70—4—150 less 15 per cent.	720	756	792	840	876
One clerk 50—4—180	600	648	696	744	792
Two Laboratory Assistants 20—1—30/2—50 less 15 per cent. ..	408	432	456	480	504
Contingencies	5,000	5,000	5,000	5,000	5,000
Total ..	7,748	7,964	8,180	8,420	8,636
Grand Total ..			40,948		

	Rs.	A.	P.
Besides the above the Government will supply fresh fruit upto 500 maunds a year which at Rs. 10 a maund means Rs. 5,000 a year or for five years	25,000	0	0

This means that the total contribution of the N.-W. F. Province Government will be :—

		Rs.
1. Buildings and equipment ..	..	10,000
2. One Dehydrator, etc. ..	..	10,500
3. Recurring expenditure for 5 years	..	40,948
4. Expense on fruits for 5 years ..	..	25,000
Total	..	86,448

It is clear from the above that while the I. C. A. R. is being requested a sum of Rs. 44,940, for a period of five years for research work primarily on fruit drying and to a less extent on other forms of fruit preservation, the Local Government will be making a contribution of approximately double this amount for the same period towards the work.

In view of the above facts the I. C. A. R. may be pleased to contribute towards the scheme a total of Rs. 44,940, spread over a period of five years, as deailed above.

The installation of a dehydrator is to be taken up in current financial year. It would therefore be desirable to start the work as early as possible. The Scheme may kindly be sanctioned at an early date so that the work on it, may be initiated in 1940.

APPENDIX XVI.

Note on Subject No. 11 (a) :—The organisation of the multiplication and exchange of approved stocks of fruits.

In pursuance of a recommendation made by Sir John Russell the Fruit Sub-Committee of the Advisory Board was directed to examine the present position in regard to stocks of fruits and to make detailed proposals as to what action the Council could take in the matter of the organisation of the multiplication and exchange of approved stocks. The Sub-Committee which considered the matter in November 1938 recommended that information from each province and State as to the existing organisation for distribution of stocks should be called for and presented at its next meeting. This was accepted by the Advisory Board. A circular letter which was accordingly issued to all Provinces and States together with extracts from the replies received from the Directors of Agriculture is enclosed (Annexures I and II).

2. The subject is now for the consideration of the Fruit Sub-Committee. The report of the Committee will be submitted to the Advisory Board in due course.

ANNEXURE I.

Letter from the Secretary, I. C. A. R., to all Provincial Governments and Constituent States, No. F. 47/1/38-A., dated New Delhi, the 7th February 1939.

I am directed to invite attention to the enclosed extracts from Sir John Russell's report embodying his recommendations on the organisation of the multiplication and exchange of approved stocks of fruits (Enclosure). The Advisory Board recommended that the Council should do more in this direction in future. Upto the present, action had been limited to obtaining certain important stocks from the East Malling Research Station for supply to fruit experiment stations aided by the Council but this referred to temperate climate fruits.

2. The subject was considered at the meeting of the Joint Sub-Committee of the Board and the Governing Body in July 1938 with the suggestion that, if Sir John Russell's proposal was approved in principle, the Fruit Committee of the Advisory Board would be asked to work out details. The Special Joint Committee's recommendation was that the Fruit Sub-Committee of the Advisory Board should examine the present position in regard to fruit stocks and make detailed proposals as to what action the Council could take in the matter and the Governing Body accepted this recommendation.

3. The subject was accordingly placed before the Fruit Sub-Committee and the Advisory Board in November 1938. The Sub-Committee observed that the question could not be discussed without information from each province and State as to the existing organisation for distribution of stocks of fruits. It was decided that this information should be called for and presented to the next meeting of the Fruit Sub-Committee. The recommendation of the Sub-Committee was approved by the Board.

4. *I am accordingly to request* that the Council may kindly be furnished as *early as possible* with the *information desired* by the Fruit Sub-Committee.

Enclosure to Annexure I.

Extract from the report of Sir John Russell, D.Sc., F.R.S., on the work of the Imperial Council of Agricultural Research in applying science to crop production in India.

* * * * * * * * * *

Fruit.—The hill regions offer considerable scope for the ordinary English and Mediterranean fruits, and the plains and the Peninsular for tropical and subtropical fruits—mangoes, citrus, bananas and others. The cultivation or fruit should be extended where possible and a distinction should be made both in experimenal work and in action between production for the village and production for the market. Much confusion in regard to varieties needs straightening out : methods of propagation have to be developed, and above all, supplies of young trees true to type must be worked up for distribution.

Along with fruit growing for the market go various subsidiary industries, especially fruit preservation and the making of containers, besides minor activities such as bee-keeping and poultry keeping, both of which go well with fruit growing.

Transport is, however, a usual limiting factor and this should be improved wherever possible.

* * * * * * * * *

(6) On its developmental side the Council should have resources :—

* * * * * * * * *

(4) to arrange for the setting up of organisation for the multiplication and distribution of approved stocks of seed, sets, and fruit trees.

* * * * * * * * *

ANNEXURE II.

Replies received from Provinces and States.

1. **Madras.**—The multiplication and distribution of young fruit trees have been till recently the primary concern of private nurserymen in this Presidency. The Agricultural Department, however, has been helping the private nurserymen by taking a prominent part in the distribution of fruit plants raised in their nurseries. An idea of the number of plants distributed through the

departmental agency during the past three years is presented in the following table :—

Number of plants supplied by the Madras Agricultural Department during the past three years.

	1935-36.	1936-37.	1937-38.
Mangoes	35,174	78,083 (*a*)	37,143
Bananas	31,436	6,313	25,544
Pine-apples	57,700	58,454	57,627
Citrus and other fruit plants	66,018	..	10,778
Total ..	190,328	142,850	131,092

(*a*) Includes citrus and sapotas.

2. Although a major part of this supply was effected through the private nursery trade, a fairly large number of these plants was also raised in the various Agricultural Research Stations where fruits are being grown as subsidiary crops or through the Government Hill Fruit Stations at Kallar, Burliar and Coonoor. The District or propaganda staff of the department, who are in direct touch with the public, receive indents and forward the same to the Government farms at the first instance. If the supply cannot be met within the farms, the indents are forwarded to such of the nurserymen as are considered to he reliable by the Departmental officers.

3. The above system has served a useful purpose in that, the nurserymen have endeavoured to give complete satisfaction to the Department, which is their largest customer in the matter of supply of trees true to type. The public in general have also come to realise that the plants ordered through the department prove to be more satisfactory than those ordered direct from the nurserymen. The advisory work rendered by the departmental staff in suggesting the suitability of the site, of varieties of fruits to be planted and the methods of raising and maintenance of orchard, etc., has uo doubt served as an additional incentive to the public to stick to the above procedure.

4. With progress of research work on fruits and an increasing interest on the part of the public towards scientific fruit-growing, a better organisation for the multiplication and distribution of approved stocks of fruit trees has been felt. The Government have accordingly sanctioned the establishment of two fruit nurseries, one at Kodur in Cuddapah District and another at Talipuramba in Malabar. Mangoes and citrus are the main fruits that are propagated for distribution in the former place and mangoes and pine-apples in the latter place. At Kodur, the data collected during the past 3 or 4 years on the individual tree performance in typical mango and orange orchards have been used to select the most desirable scion parents for multiplication. The variety collection plots both in Kodur and Taliparamba and rootstock and propagation experiments at Kodur will also be of great value in the future work of multiplication and distribution of fruit trees of proved merit. The Government fruit farms at Kallar, Burliar and Coonoor will continue to be centres for the supply of fruit plants for higher altitudes, while the two new

gardens sanctioned last year at Guntur and Anakapalli will in due course be the centres of fruit nursery activity in the Northern districts. All these Government centres of multiplication and distribution of fruit plants are intended not only to meet the existing demand but also to popularise the raising of genuine plants of approved sorts in the private nurseries. The procedure adopted has given some impetus to the nursery trade and five new nurseries have sprung up recently in different parts of the presidency. All these are adopting the nursery practices advocated at the Government Fruit Research Station at Kodur.

2. **Bombay.** – There is a large body of nurserymen at Talegaon, Ratnagiri and Southern part of Surat district specialising in the propagation of nursery plants. An effort is being made to register these nurseries with a view to ensure the quality of plants which they supply to the growers. It is difficult to give at present the volume of business which these nurseries are doing. These nurseries chiefly deal with mango, citrus and chiku grafts. The list of nurserymen is already prepared and the rules for the registration of nurseries have been drafted (copies enclosed) (Enclosures I and II).

2. The Department of Agriculture have got several fruit farms from where reliable nursery plants are given to the growers. Effort is being made to standardise these nursery plants. These standards will apply to commercial nurseries also after they are found useful.

The selection of parent plants is being made in our existing orchards from where the material can be supplied to the commercial nurseries for their use.

Enclosure I to Annexure II.

Draft Proposals in regard to the voluntary registration of nurserymen in the Bombay Presidency.

During the last several years, large number of complaints have been heard from the growers as to the quality and the genuineness of the stock plants which they buy from the nurserymen. Careful enquiry in this matter lays bare the facts that :—

1. Sometimes the nurserymen do not sell the proper kind of grafts as ordered by the growers,
2. Often weak plants are sold for the best price,
3. Due to bad packing the plants die in transit, and the loss is borne by the grower,
4. A large number of plants die immediately after planting, showing that the plants were not fit for sale, and
5. Often pot bound plants are sold in order to clear the old stock by the nurserymen.

The ultimate effect of this practice is baneful on fruit plantation. The plantations are not uniform. The grower has got to spend a considerable amount of money in replacing dead plants. The growers get disappointed and discouraged when plants do not turn out to be of the desired type. The extension of fruit cultivation therefore is considerably checked.

The Royal Commission on Agriculture in India remark (Report paragraph 519) that " the Agricultural Department should take step to ensure that reliable stocks are obtainable by the public." Further they state " that nurserymen and seedsmen are making their appearance in India, but as a class, they are not as yet fitted to make their own selection of trees and vegetable seeds. The Agricultural Department should use every means in their power to encourage and strengthen private enterprise in this direction."

It observed that there are 19 nurseries already doing business in this Presidency. Their annual business is enormous. New nurseries are also springing up.

With a view therefore to improve the situation and to win the confidence of the growers in favour of the nurserymen, it is now suggested that the nurseries may be registered. Such registration will oblige nurserymen

(1) to keep a register of their transactions,

(2) to grade their stocks as prescribed in table No. 2,

and fix the prices according to each grade.

The standard will be defined from time to time in consultation with the nurserymen to suit the requirement of the trade. The plants from where buds and grafts are taken shall be labeled and the plants which are sold shall carry labels indicating the name of variety and the standard under which the plant is sold.

(3) to keep the nursery stock open to inspection by the Horticulturist to the Government of Bombay or other Agricultural Officers.

(4) to hold themselves responsible for the supply of bad and unreliable plants and any kind of damage to plants in transit due to weak stock, bad lifting and packing, etc.

Lifting of plants.

(5) For lifting and packing nursery plants, the following instructions may be followed :—

(*a*) The nursery beds may be heavily irrigated before plants are lifted.

(*b*) Large number of lateral roots may be preserved and the tap root may be properly cut.

(*c*) Tender shoots and all immature wood may be pruned.

Packing for transport.

(*d*) Mango plants or other plants in pots may be put in wooden boxes and packed firmly for transport purposes.

(*e*) Citrus plants and other nursery plants may be packed with soil or moist moss in baskets or boxes. A package should not contain more than 50 plants.

NOTE.—The size of boxes and baskets may be defined if the nurserymen have no objection.

Rooted Cuttings.

(*f*) Unrooted cuttings which should not be less than 8 to 10 inches in length may be packed in moist moss distant places where journey lasts more than 24 hours.

(*g*) Plants for foreign places should be sent in Wardian cases.

(*h*) Banana suckers and Pineapple suckers can be transported in loose gunny bags or baskets.

In cases it is observed at any stage that a nurseryman has supplied unreliable plants, his name will be removed from the list of registered nurserymen.

The registered nurserymen will receive the following facilities from the Department of Agriculture :—

1. No fees will be charged for registration.

2. Their names will be recommended to prospective growers and buyers.

Explanations.—Large number of growers inquire from the Horticulturist to the Government of Bombay as to the proper source from where reliable nursery plants can be obtained. The Horticulturist to the Government of Bombay as well as other agricultural officers will suggest the names of registered nurserymen to the growers for such transactions.

3. The sales of plants will be greatly helped by the department in the course of their propaganda work to increase fruit cultivation in the districts.

Explanation.—The Department of Agriculture is busy in enlightening the grower on the possibility of extending their plantatious. At the same time effort is being made to improve the existing wholesale and retail fruit market in the Presidency. This is likely to encourage the consumption of more fruit in the towns. Thus circumstances are being created under which the plantations are likely to be extended. This means better sales for nurserymen.

4. The Department of Agriculture will help to settle any dispute between the nurserymen and the growers who buy the plants.

Explanation.—Whenever the plants are supplied by nurserymen to the growers at the instance of the Department of Agriculture, the growers naturally send all their complaints to the Department of Agriculture, in case they do not get good plants. The Department of Agriculture therefore is duty bound to assist the growers in this matter. The Department of Agriculture do not mean to take any legal responsibility in settling disputes between nurserymen and growers. It is only a sort of moral pressure that can be brought on both parties concerned in such matters. Even now such disputes are referred to the Horticulturist to Government. There have been occasions when growers have made complaints to the Director of Agriculture. Such cases have been referred to the Horticulturist to Government with instructions to mend matters and without committing ourselves to any legal responsibility, the Horticulturist has settled such differences.

5. The Department of Agriculture will from time to time advise the nurserymen on the various improvements desired to be effected in nursery stock and fruit trees as well as in nursery methods.

Explanation.—Whenever by actual experimentation it is found that a certain nursery practice, such as the height at which plants are budded, the range for grafting, stock for any particular purpose, is found beneficial it would be brought to the notice of the nurserymen and a provision will be made in the registration papers for its adoption.

NOTE.—Table defining Mursery stock is not attached. The final scheme will be prepared after the criticism is received.

Enclosure II to Annexure II.

LIST OF NURSERYMEN CHIEFLY DEALING WITH STOCK PLANTS MENTIONED.

Mango grafts.

(1) Khan Bahadur V. P. Bhiladwala, Pardi, district Surat, B. B. & C. I. Railway.

(2) Framroze C. Batliwala, Esquire, 361, Hornby Road, Bombay.

(3) A. N. Patel, Esquire, Proprietor, Patel Farm and Nursery, Post Udwada Railway Station, district Surat.

(4) The Proprietor, Modern Nursery, Bassein, district Thana, B. B. & C. I. Railway.

(5) Ganeshkhind Botanical Gardens, Kirkee (Superintendent), G. I. P. Railway.

(6) Modibag, Agricultural College, Poona (Superintendent).

(7) Also refer to the District Agricultural Overseer, Ratnagiri.

Santra and Mosambi, and Kagdi limbu plants.

(1) Dhondiba Gopalrao Karanje Patil, Esquire, Shikarpur, district Poona.

(2) R. G. Pitambre, Esquire, 307, Narayan Peth, Poona City.

(3) G. M. Date, Esquire, Manohar Nursery, Baramati, district Poona.

(4) Mr. Pingle, Nurseryman, Ghorpadi, Poona.

(5) Modibag, Agricultural College, Poona.

(6) Mr. Sadhu Mahadu Bhujabal, Talegaon, Dhamdhare.

(7) Mr. Hari Ganesh Londage, Talegaon, Dhamdhare.

(8) Mr. Nivrothi Genuji Pingale, Talegaon, Dhamdhare.

(9) Mr. Sitaram Vithoda Gaikwad, Talegaon, Dhamdhare.

(10) Mr. Shankar Vithoba Gaikwad, Talegaon, Dhamdhare.

(11) Mr. Tatyaba Mahadeba Gaikwad, Talegaon, Dhamdhare.

(12) Mr. Mahadu Savalaram Bhujabal, Talegaon, Dhamdhare.

(13) Mr. Kisan Sahai Bhujabal, Talegaon, Dhamdhare.

(14) Mr. Jafarbhai Sutarbhai Bagowan, Talegaon, Dhamdhare.

(15) Mr. Vinayak Yeshavant Kale, Talegaon, Dhamdhare.

(16) Mr. Bhagawan Keshav Pingale, Talegaon, Dhamdhare.

(17) Mr. Mahadeo Abaji Walunja, Nandore, taluka Junnar.

Chiku.

(1) K. T. Karulkar, Esquire, Umbergaon, district Thana.

(2) S. T. Gavand, Esquire, Thana.

(3) M. M. Masani, B.Ag., Gholwad, B. B. & C. I.

(4) Khan Bahadur V. P. Bhiladwala, Pardi, district Surat.

(5) Framroze C. Batliwala, 361, Hornby Road, Bombay.

(6) The Proprietor, Modern Nursery, Bassein.

Pineapples.

(1) Vasantra Oza, Esquire, Khatavchi Wadi, Borivli, B. B. & C. I. Railway.

(2) The Manager, Akbarpur Pineapple Gardens, P. O. Narainchira, South Sylhet.

(3) The Superintendent, Agricultural Farm, Shirgaon, Ratnagiri.

Banana.

(1) Proprietor, Modern Nursery, Bassein, district Thana.

(2) Superintendent, Ganeshkhind Botanical Gardens, Kirkee, Poona.

(3) Reference may also be made to the District Agricultural Overseer, Jalgaon.

Pomegranates.

(1) The Proprietor, Modern Nursery, Basseins, district Thana.

Guavas.

(1) The Superintendent, Ganeshkhind Botanical Gardens, Kirkee, Poona.

(2) The Superintendent, Modibag, Agricultural College, Poona.

Grapes.

(1) The Manager, Godrej's Farm, Pimpalgaon, district Nasik.

(2) H. V. Gole, Esquire, Grape Grower, Nasik.

(3) G. M. Date, Esquire, Baramati, District Poona.

NOTE.—Reference must be made direct to the management of the above nurseries and the terms settled. If any nurseryman wishes to include his name in this list, he should apply to the Horticulturist to Government, Agricultural College, Poona, in this matter.

All nurserymen are expected to keep records of their transactions, so that any complaints from the growers can be referred to them.

All fruit growers of the Bombay Presidency are requested to enlist themselves as members of the Bombay Presidency Fruit Growers Association (Secretary at Post Ravalgaon, Malegaon taluka, district Nasik) in order to get marketing facilities for their produce.

3. **Bengal.**—Practically speaking there is no organization for distribution of stock fruits in Bengal. But there are quite a number of private dealers and nurserymen who prepare and sell grafts, gooties, seedlings, etc. of various kinds of fruit trees. Some of them have specialized in dealing with particular kinds and varieties of fruits. The main drawback with these people is that much reliance cannot be placed about the genuineness of the variety supplied, and one has to be particularly careful in selecting and properly identifying his

supply. *The cause may not be intentional, but due to lack of arrangement* in keeping records and proper labelling the plants. Of the private firms mention may be made of Rais-mirza's Gardens at Murshidabad where one can expect to obtain genuine grafts of mangoes, gooties of lichi, true to named type.

Apart from the private dealers and nurserymen, stocks of fruit trees (grafts, gooties and suckers, etc.) are also available for sale in gardens under Government management, *viz*., the Sibpur Botanical Garden, Kalimpong Farm, Botanical Section, Dacca Farm and the Horticultural Research Station, Krishnagar. It must be said, that at present, supply from these places is very limited and that also of limited kinds and number of varieties of fruits. But with the development and growth of the Horticultural Station, Krishnagar, it is expected to organize the distribution of stocks of good fruits to the public in a comprehensive manner. It may be mentioned that all the points raised by Sir John Russell in connection with the growing of fruits in the plains are under investigation in our scheme of Horticultural Research at Krishnagar and also at the small Botanical Gardens, Dacca Farm.

4. **The United Provinces**.

Horticultural stations in the Plains.—The Government gardens at Saharanpur have been distributing, free of charge, reliable stocks of seeds, sets and fruit trees for trial in other parts of India, to Indian States and to the public. These stocks are now sold. The plains orchards propagate and supply to the public grafts and seeds true to type for propagation and multiplication. Experiments have been conducted at Saharanpur, Lucknow, Allahabad and Agra in methods of propagation. Varieties are classified and catalogues printed which are supplied free to the public. All our parent plants are true to name and type. Propagation is done only from those trees which are known to be good croppers bearing fruit of superior quality.

Hill Orchards, Chaubattia.—In this orchard the Hill Fruit Research Scheme financed by the Imperial Council of Agricultural Research is in progress. The entire produce of the orchard as well as the land and staff is at the disposal of the research staff for experimental purposes. For this reason not much has been done in the way of distributing approved stocks, etc. There are difficultics in the way of propagating large numbers of stocks at this station. Small numbers of stocks to meet the demand from the public are produced and a printed catalogue is supplied free of charge. There is a large number of East Malling Types of apples, plums, cherries and quince stocks under trial. A number of these are required for research purposes and some are available for distribution to the public.

In the United Provinces there are over 300 private nurseries, some of them recognised by the U. P. Fruit Development Board. These have been inspected and passed as reliable by the Horticultural Officers of the Gardens Section of this Department. It has been suggested, however, that each Government garden or orchard should be used as a centre for the multiplication and distribution of approved stocks of seeds, sets and fruit trees and that all specially good mother trees be registered.

5. **The Punjab**.—The importance of the supply of nursery plants of reliable parentage has always been fully recognized, but it was not until after

the inception of the Fruit Section in the year 1926 that practical steps were taken in the Punjab. Originally Government felt that if private enterprize could be induced to provide satisfactory nursery plants, it would be undesirable for the Agricultural Department to enter into serious competition with private nursery men. Consequently the Fruit Section adopted other means of helping growers to secure reliable plants, namely, (*a*) by inducing and assisting prospective fruit growers, who desired to plant gardens on a large scale, to produce their own plants by taking budwood from trees of known and good parentage, (*b*) by recommending to the growers reliable nurseries where such were believed to exist. For the latter purpose, a list of reliable nurserymen was prepared after inspecting their nurseries provided such nurserymen undertook to carry out our suggestions, to supply plants of known parentage and to keep their nurseries free of disease. etc., (*c*) by producing only a small number of plants in the Department's experimental garden nursery at Lyallpur.

The method of helping prospective fruit growers to produce their own plants was fairly successful but it could be undertaken by large fruit growers only. Small growers found it uneconomical to produce their own plants and had neither the requisite amount of experience nor could they get budwood of reliable parentage. The second method, *i.e.*, maintenance of a list of reliable nurseries, was somewhat more successful and is still being followed.

Although more and more reliable nurseries are springing up and growers are able to get from some of the nurseries plants of more reliable parentage than previously and at cheaper rate yet this system was found greatly wanting some years ago when a large number of complaints were received that many nurserymen failed to supply plants true to name. In some cases plants, alleged to be of high quality and supplied at very high price, were subsequently found to be of very inferior quality. This created a great deal of disappointment because growers, even after paying high price, could not be certain of the quality of stock purchased. This developed a tendency on the part of growers, especially those with moderate means, to purchase plants wherever they could get them at the lowest rate. This state of affairs induced Government to take adequate steps to produce and supply directly reliable plants to the public at a reasonable rate so that there may be no tendency on the part of prospective growers to run after cheap stock. This work was begun with the aid of a provision of Rs. 47,000 from the Rural Reconstruction grant of the Government of India late in 1935.

From 1926 to spring 1936 the Department was able to supply only 37,768 fruit nursery plants. With the inauguration of this nursery scheme, however, nurseries at nine different centres scattered all over the province were started in 1936 : a total of 55,000 plants was supplied in the two years 1936 to 1938. About 50,000 plants are expected to be supplied during the present agricultural year ending 30th June, 1939. It is hoped that, within a year or two, the annual supply from these Government nurseries will amount to about 75,000 plants or more. Production in Government nurseries would have been much greater but for the fact that there are only a very small number of parent trees in Government experimental gardens from which budwood can be taken and the Fruit Specialist is forced to secure budwood

from trees in private gardens which are found to be **of outstanding merit and** which have been awarded prizes in various fruit shows. The difficulty of budwood will, however, soon disappear as a progeny garden of 25 acres has *been planted by the* Department *mainly for the* supply of budwood. *It is* also worth noting that, apart from the reliability of stock, the price of the plants has been greatly reduced. The demand for plants from the public is at present several times more than the available supply from these Government nurseries.

6. **Bihar.**—No organisation exists in this province for distribution of stocks of fruits. Orchadists in Bihar and the Assistant Economic Botanist, Sabour, prepare and sell numbers of mango fruits to the general public but there is no recognised organisation for the distribution of such stocks.

7. **Central Provinces and Berar.**—The fruit stocks in charge of the department of agriculture in this Province are at present distributed from the nurseries maintained at the Government Horticultural gardens at Nagpur and Pachmarhi, mainly from the former. Besides these, fruit plants and seedlings are also distributed from the departmental farms and gardens where small nurseries are maintained. There are a few private nurserymen mostly in the Nagpur district who also deal in fruit stocks, particularly oranges, guavas, mosambi and papyas. I am also to forward, for the information of the Fruit Sub-Committee, a list showing the varieties of plants sold through the agency of Government gardens in this Province (Sub-Enclosure to Enclosure II).

Sub-Enclosure to Enclosure II.

List of varieties of plants sold through Government Gardens.

Serial No.	Name of plants.	Serial No.	Name of plants.
1.	Awla.	15.	Khirni.
2.	Apple Custard.	16.	Mango.
3.	Apple Wood.	17.	Mulberry.
4.	Ber.	18.	Mosambi.
5.	Chikoo.	19.	Orange.
6.	Chakotra.	20.	Plantain.
7.	Date.	21.	Phalsa.
8.	Fig.	22.	Papaya.
9.	Grap Vine.	23.	Pomegranate
10.	Guava.	24.	Pumelo.
11.	Jack Fruit.	25.	Pear.
12.	Jambheri.	26.	Sep.
13.	Kamrak.	27.	Sweet Lime.
14.	Karonda.	28.	Sour Lime.

8. **Assam.**—We have not carried out sufficient experiments to be in a position to distribute approved stocks of fruits. We, however, prefer certain stocks as we have found them, from our limited experience, to be quite good.

In deciduous fruits the stocks that are generally used successfully are as follows :—

1. Peach	Local peach or plum.
2. Nectarine	Local peach or plum.
3. Plum	Local peach or plum.
4. Cherry	Root suckers coming out of imported Cherry trees.
5. Apricot	Apricot, local peach and plum.
6. Pear	Local wild pear stock.
7. Apple	Imported stocks (local Crab apple stock failed).

In citrus fruits the following stocks are used :—

1. Sweet local orange .... Jambura (*C. decumena*), Pani Jamir and Ada Jamir (lemon), Satkara (*C. ichingesis*) and Khasi Kagzi (lime). 2. Washington Naval orange .... Satkara and Jambura. 3. Valencia orange .... Satkara and Jambura. 4. Grape fruit or Pomelo (*C. maxima* var *paradisica*) .... Satkara and Jambura.

No fruit stocks are, however, distributed or sold by the Department as there is no demand.

In this connexion, it may be mentioned that various fruit grafts are sold or distributed free from our Fruit Experiment Station at Shillong and from the orchards at Khanapara and Haflong. During the year 1937-38, the following grafts were so issued :—

1. From the Shillong Fruit Experiment Station (deciduous fruits)—

(1) Apple	17
(2) Pear	83
(3) Peach	85
(4) Plum	80
(5) Cherry	18
(6) Apricot	14

2. From Khanapara and Haflong (citrus fruits)—

(1) Local orange	50
(2) Valencia orange	24
(3) Washington Naval orange	24
(4) Pomelo or Grape Fruit	24

There is no private agency in Assam for the distribution of stocks or grafts of fruit.

9. **North-West Frontier Province.**—There is no organisation in existence in North-West Frontier Province responsible for the distribution of stocks of fruits. Peaches, Plums and Pears are the main fruits of the Province. The position, at present, as regards stocks for these fruits is as follows :—

Peaches are budded on peach seedlings, raised from stones of unbudded plants of local varieties. These are said to give healthier and stronger growing

trees than seedlings from budded trees. Plums are also budded on peach seedlings, while pears are usually budded on suckers of Batang.

Standardization and vegetative propagation of stock for these fruits is of a primary consideration in the development of the fruit industry of the Province. This work still needs to be accomplished. The question of the distribution of stocks can arise only after their standardization.

It is felt that the work on the standardization of fruit stocks can best be undertaken at the Research Station, Tarnab. This has already been included in the Programme of Work of the Horticulturist, N.-W. F. Province. It is hoped that in time to come, this Station will also become the centre for the distribution of stocks for deciduous fruits.

10. **Orissa.**—Orissa enjoys a favourable geographical position for fruit culture. Its nearness to the tropic of cancer, the influence of steady sea-breeze, a fairly high amount of rainfall ranging from 45" to 70" a year makes the province well suited for fruit culture. In addition the Sub-mountain and the plateau regions varying from 1,000 feet to 4,000 feet afford ideal situation for growing both tropical and temperate zone fruits successfully.

Naturally jack and mangoes grow luxuriantly. In many situations pine-apples will thrive exceedingly well. Near Parlakimedi loose.coat oranges grow to perfection on the hill sides and forest lands. Seedling oranges are often found in the valleys of hill States and in South Jeypore. Coconuts and plantains thrive on the coastal plains.

The Government of Orissa has been organising and pursuing a vigorous policy of raising a large number of fruit trees at various centres for an extensive distribution at very moderate prices. Graft plants of various fruits are now being sold at *half* cost price and the Government meet the cost of transport.

Propagation is both by seed and vegetative method. Most of the fruit plants are being multiplied by grafting, budding, layering, gootying, cutting and suckers on the more important Government Farms.

Recently the Imperial Council of Agricultural Research has sanctioned a scheme for testing varieties of oranges and other citrus plants stocks and the effect of manures on citrus production. This scheme will come into operation on the Sambalpur Farm.

The following are the fruits now handled by the Department :—

Citrus fruits.—Propagation is done mostly on the Zamberi stocks. Work is carried on at Cuttack, Sambalpur, Khurda and Angul. Varieties available are :—

Nagpur orange.
Malta.
Batavian.
Sylhet.
Majorca.
Dam corsica.
Mediterranian.

Blood orange.

Buckeye Navel.

Jaffa Navel.

Paramatha orange.

Washington Navel.

Tangerin.

Valencia.

Satha guddi.

Mosambi, sour oranges from seed.

Nearly 50,000 seedlings have been raised from Parlakimedi oranges at Cuttack, Parlakimedi and Rayaghada.

Limes and lemons	Kagji and Pati. Varieties by layering and gootying.
Pumelo	By gootying.
Mosambic lime	By enarching and budding on Zamberi stock.

In all there are about 3,744 plants ready for distribution. During the year 1,294 plants have been sold.

Deep soils and the loamy texture of the red soils in Sambalpur and Angul seem to be quite congenial for citrus culture under irrigation. The fertile hill slopes are practically the home of the loose coat oranges. The deep soils of the Koraput plateau and the agency tracts in Ganjam are being tapped now. Varieties are now being tested both on the Pottangi and G. Udayagiri Farms 3,050 feet and 2,000 feet respectively.

Cocoanuts.—Attempt is being made to see if the broad belt and sand beach from Puri to False Point cannot be put under cocoanut. Experiments are fairly successful on the Farm at Puri.

A large belt of cocoanut now exist in Puri District and the centre is Sakhigopal. On the Government Farm at Puri a large number of seedlings have been raised for distribution. Reputed good nuts have also been secured from Tellichery, west Madras Coast for this purpose.

At present there are a large number of seedlings ready for distribution at Puri.

Tellichery coconut seedlings 3,000.

Sakhigopal coconut seedlings 7,000.

Mangoes.—Mangoes grow very well everywhere in Orissa and they are mostly grown from seeds. In the plateau they grow up to great heights even upto the slopes of hills but they are said to be leafy and the fruits lack in flavour. Grafts varietes from Bihar and Madras thrive here but the local ones seem to ripen earlier.

Regular varietal tests seem to be necessary for selecting suitable varieties for the plains and the plateau.

Large number of grafts are made on the Government Farms specially at Cuttack, Angul, Balia and Khurda.

Common Bihar varieties are :—

Fazli, Bombay, Golabkhas, Lengra, Dophala, Himsagar, Alfanso and Zardalu.

Madras varieties :—

Latra Madras, Peter Madras, Kedar Madras, Latsundari, Baiganpali.

There are now about 3,083 plants available for sale.

Plants sold last year 1,753.

Guavas.—Allahabad and Benares guavas thrive here and they are multiplied by layering and gootying.

Plants available	3,263
Plants sold last year	598

Plantains.—Planatains grow well in Orissa everywhere. But at present there is a big import from Madras. Many varieties are being tested on the Farms. The best local one is called Champa. Improvements in cultivation, irrigation and manuring are bing effected on the Farms. One thousand rupees worth of plantain suckers were freely distributed last year to popularise its cultivation.

Varieties :—

Pathkapura.
Kathia.
Champa.

Sapota.—This fruit is doing remarkably well and many grafts are being sold.

Plants available for sale	722
Plants sold last year	226

Rose-apple.—These plants also thrive and good fruits are produced. The flavour is fine.

Plants available for sale	148
Plants sold last year	171

Jack fruits.—This is a common fruit in Orissa and there are several varieties.

No. of seedlings available for sale	194
No. of seedlings sold last year	6

Pine-apple.—Kew, Thornless and Singapuri are grown on the Farms.

Papayas.—There is a big demand for fruits and seeds are widely distributed.

Litchi.—Plants grown well here. The size of fruits and the flavour are said to be inferior to Bihar crops.

Plants available for sale	221
Plants sold last year	206

Benares—Liziphus (plums) :—

Budded plants are sold.

Plants available for sale	1
Plants sold last year	6

Pomegranates, star, gooseberry, Kamarak and English figs are also sold from plants realised on the Farms.

Of the small fruits grown as field crops tomatoes have become extremely popular and they have spread all over Orissa.

Last year in Orissa there were nearly 400 demonstration plots spread all over the province.

Cape gooseberrys (Tiparee) are getting popular as fruits are sold for making jellies and Jams.

11. **Sind.**—The centre of all horticultural research, multiplication and distribution of stocks of fruits in Sind is Government Fruit Farm, located in Lower Sind at Mirpurkhas. One of the main functions of this Government Farm, is the production of large quantities of improved fruit tree stocks and their distribution to fruit growers in the districts. The demand for such lings, budded and grafted stock plants has increased tremendously since the opening of the Lloyd Barrage and the Agricultural Department has therefore opened one fruit sub-station at Larkana to serve the needs of North Sind districts where fruit growing is making extensive progress. At this sub-station a nursery of budded citrus stock and grapes has been established to meet the demand for the supply of these varieties. The stock issued from the main Fruit Farm and the sub-stations is over 30,000 plants and cuttings per annum and it is hoped that this will increase to 50,000 very soon.

Considerable work has been done on the introduction and acclimatisation of desirable varieties of fruit trees from different foreign countries and other fruit growing tracts of India. Several citrus varieties from Iraq, Palestine, California, Phillipine Islands and South Africa and superior mango varieties from Bombay and Madras Presidencies and from the United Provinces, have been successfully introduced.

The results of all the horticultural experiments conducted at the Government Central Fruit Farm at Mirpurkhas regarding (1) the successful methods of propagation, (2) improved cultural methods for fruit and nursery plantations under Sind conditions, (3) improved methods of growing vigorous stock strees, (4) irrigation and manurial requirements of fruit tree orchards and vegetable gardens, (5) systems of pruning for fruit production, (6) the technique of nursery production, (7) control and preventive measures against major insect pests and fungoid diseases of fruit trees and vegetable crops, and (8) the picking and handling of fruit, are demonstrated and made known to the public and the fruit growers by way of leaflets printed both in English and Vernacular to help them in establishing their own orchards. These leaflets are distributed gratis very freely.

In order to demonstrate effectively to the public, improved methods of fruit culture and commercial varieties of fruit trees suitable for extension under Sind conditions, the Agricultural Department in co-operation with selected Zamindars has established a number of 'Demonstration orchards' (about 25) on privately owned lands throughout Sind. These demonstration orchards are from 4—6 acres in extent and receive a free supply of fruit stock from the Government Fruit Farm, Mirpurkhas, on definite conditions regarding maintenance, supervision, etc. These are entirely maintained by the zamindars on whose lands they are situated but are supervised and worked under the direc-

tion of Horticulturist and his staff. It has been decided to increase such demonstration centres to 80, within a period of five years having at least one in each Taluka of Sind. In addition, demonstration orchards on similar lines, have also been laid out at all the Auxiliary Farms and at the Agricultural Research Stations Sakrand and Dokri.

Farmer's weeks and horticultural shows are organised at these demonstration orchards, sub-stations and the main Fruit Farm, Mirpurkhas, where the fruit growers and other zamindars, who come in very large numbers, are shown different methods of successful propagation of fruits, scientific methods of laying out of orchards different varieties of improved fruits and the method of control against pests and diseases. This educated the fruit-growers to a considerable extent in improving their orchards and their horticultural practices. The Railway authorities issue concession tickets at 1⅓ fares for such Farmers' Weeks.

A course in practical horticulture is commenced at the Government Fruit Farm, Mirpurkhas, for the production of trained malis. The Horticulturist in Sind maintains a register of employers requiring men trained in improved horticultural methods and the malis trained at the Fruit Farm, are recommended to them. Trained malis on the staff of Government Fruit Farm and the sub-stations are also lent for short periods to give practical assistance to fruit growers in horticultural development on their own lands.

At all implement and seed depots of the Agricultural Department in Sind, oufits for spraying or dusting fruit and vegetable crops against insect pests or fungoid diseases are maintained together with a supply of common insecticides and fungicides for the facility of small fruit growers. District Kamgars of the Agricultural Department are trained in the proper use of such equipment and they are very often lent to the fruit growers for carrying out spraying and dusting operations on their orchards.

At all district shows or large demonstrations held by the Agricultural Department in the districts, a Horticultural Section is organised where all sorts of horticultural exhibits, improved implements, insecticides, fruit samples, nursery stocks and leaflets are shown and their use demonstrated to the public. The Horticulturist and his staff give advice and assistance to the fruit growers in horticultural problems.

All this organisation has resulted in considerable increase of area under gardens and orchards in Sind.

12. **Hyderabad**.—Reply awaited.

13. **Mysore**.—The Government Gardens Department is raising fruit plants for distribution at Government nurseries at Bangalore, Mysore and Chickmagalur. These are Guavas, Pomegranates, Grape-vines, Citrus, Papayas, Figs, Pineapple, Butter-fruits, etc. The fruit research station at Hessarghatta can also be utilised as a centre for acclimatising, rearing and propogation of foreign plants.

The major portion of the business of propogation of fruit trees is in the hands of about a dozen florists and nursery men at Bangalore. A majority of the plants distributed by them seem to be genuine but no pedigree records of statistics are maintained by them. Information to the extent available, is given in the appended statement (Enclosures I to III).

ENCLOSURE I.

Statement showing the various kinds of Foreign fruit trees obtained and distributed by the Gardens Department during the last three years with approximate value.

Year and Name of the Firm.	Apple.	Orange.	Grape-vine.	Peach.	Pear.	Fig.	Lime.	Grape fruit.	Papay-Mango seeds Sapota	Guava.	Miscellaneous.	Total.	£ s. d.	Rs. a. p.
1935-36.														
1. Messrs. C. A. Nobelius and Sons Pty. Ltd., Australia.	2,348	119	75	..	..	..	3	24	..	..	..	2 569	87 19 0	..
2. The Superintendent, Ganeshkhind Fruit Experiment Station, Kirkee.	..	..	..	..	..	102	..	..	..	..	..	102		26 6 0
3. The Model Nursery, Calcutta ..	..	..	..	..	..	..	..	..	100	..	..	100		33 0 0
4. The Superintendent, Modibagh Gardens, Poona.	..	..	..	..	..	..	..	36	..	..	..	36		..
5. Papaya Farm, Gurushaiganj ..	..	..	..	..	..	..	..	..	1 Oz.	..	..	..		1 0 0
1936-37.														
1. Messrs. C. A. Nobelius & Sons Pty. Ltd., Australia.	574	144	..	..	12	16	..	24	..	..	..	770	59 12 0	..
2. Messrs. Hobbie & Co., Calcutta ..	..	..	..	..	..	3	..	..		9	12	24		47 1 0
1937-38.														
1. Messrs. C. A. Nobelius & Sons Pty. Ltd., Australia.	2,419	55	8	6	7	8	28	14	..	..	..	2,545	135 12 4	..
2. The Secretary, Agri-Horticultural Society, Calcutta.	..	..	..	..	..	..	..	..	..	30	6	36		62 11 0
3. Cocoanut Research Station, Limwilla, Ceylon.	..	..	..	..	..	..	..	..	..	..	30 Cocoanuts.	30		25 8 0
4. Superintendent of Gardens, Darbhanga.	..	..	..	..	..	..	..	..	..	..	..	..		..
5. Papaya Farm, Gurushaiganj ..	..	..	..	..	..	..	..	..	..	13	3	16		36 12 0
6. Superintendent, Government Gardens, Lucknow.	..	..	..	..	..	..	..	..	2½ Oz.	..	..			3 0 0
7. Director, Botanic Gardens, Manila ..	..	..	..	..	..	..	..	..	..	18	..	18		61 6 0
											24 Cocoanuts.	24		30 0 0

ENCLOSURE II.

Statement showing the number of trees distributed by private Nurserymen in and around Bangalore (Approximate figures).

Serial No.	Propagated by.	Apples.	Citrus var.	Mango var.	Guava var.	Pomegranate.	Sapodilla.	Fig.	Peach.	Plum.	Pear.	Orange.	Grape-Vine.	Pumelo.	Total. Cost.
															Rs.
	E. R. Sampangi and Sons.														
1	Propogated in their Nursery ..	500	1,000	2,000	1,000	500	1,000	1,000	500	..	..	..	..	500	3,150
2	Imported both vegetable and flowers	mainly from America, France and Germany						..	..	..	..	..	..	..	250
	M. Obalappa and Brothers.														
1	Propagated mostly in their own Nursery.	2,000	4,000	4,000	2,000	3,500	..	2,500	500	..	..	..	400	..	9,420
2	From Calcutta	..	..	..	..	..	1,000	..	..	..	..	..	..	..	..
3	Imported vegetables and flower seeds	from Germany, France, Holland, England and America								..	..	..	..	..	2,000
	M. Mooniswamy and Sons.														
1	Imported from Australia	500	500	..	..	..	..	..	..	..	..	..	..	..	800
2	From their own Nursery	..	500	1,000	300	200	..	..	..	..	..	..	..	..	1,000
3	From Calcutta	..	..	..	..	..	500	..	..	..	..	..	..	..	500
4	Imported vegetable and flower seeds	from Italy, France, and Germany					..	..	..	..	..	..	..	..	500
	M. Lakshmiah and Sons.														
1	Imported from Australia	300	200	..	..	..	..	..	..	..	..	..	..	..	350
2	Siddapur	..	..	1,000	..	..	..	..	..	..	..	..	..	..	500
3	Propagated in his Nursery ..	20	300	..	..	..	..	..	..	..	..	..	200	..	350
4	Imported flower and vegetable seeds	from France		..	..	..	..	..	..	..	..	..	..	..	100
	M. Devappa and Sons.														
1	Imported from Australia	300	200	..	..	..	..	..	..	..	..	..	..	..	350
2	Propagated in his Nursery ..	..	..	1,000	500	500	200	1,000	..	..	..	500	400	..	4,000
3	Seeds imported from America, Italy	and Germany		..	..	..	..	..	..	..	..	..	..	..	300
													Approximately		23,570

ENCLOSURE III.

Detailed list showing the Stock reared and issued from the Lalbagh and other Government Gardens.

I.—LALBAGH NURSERY.

	Plants.	Rs.	a.	p.
1. *Loquot*	896	217	4	0
2. Mango seedlings	200	50	0	0
3. Lime	150	37	8	0
4. Rose apple	600	150	0	0
5. Jak	200	50	0	0
6. Guava seedlings	250	62	2	0
7. Komarac sweet	100	50	0	0
8. Jamoon	227	56	12	0
9. Fig	150	37	8	0
10. Orange seedlings	250	62	8	0
11. Pomegranate seedlings	100	25	0	0
12. Raspberry	100	25	0	0
13. Pine apple Queen variety	500	62	8	0
14. Litchi	120	45	0	0
15. Pumelo	15	3	12	0
16. Sapodilla	5	1	4	0
17. Tamarind	20	5	0	0
18. Seethaphal	4	1	0	0
19. Grape fruit	5	5	4	0
20. Papaya	15	3	12	0
21. Grape-vine	50	12	8	0
22. Guava grafts	25	25	0	0
		988	10	0

II.—KUMARA PARK.

	Plants.	Rs.	a.	p.
1. Rose-apple	9	2	4	0
2. Loquot	97	24	4	0
		26	8	0

14. **Travancore.**—The Agricultural Department in the State maintains at the Fruit Farm, Cape Comorin, a nursery for the multiplication and distribution of fruit plants. Selected indigenous and choice exotic fruit trees like

mangoes, pomegranates, guavas, sapodillas, papayas and grapes are under cultivation in this farm. Their adaptability to local conditions is studied, and those which thrive well are propagated by grafting, budding, layering or cutting. Suitable seedlings are made available to the public at moderate prices. This is the only fruit nursery which functions in the State.

15. **Cochin.**—The only agency that is engaged in the multiplication and exchange of approved stocks of fruit trees on any considerable scale in the State is the Department of Agriculture. At its chief experimental station, *viz.*, the Government Central Farm, Ollukkara, fairly large areas are grown under different types of the tropical fruit trees and every year on an average the following stocks are reared and sold to the public :—

1. Graft mangoes of selected varieties	2,000
2. Sapota grafts	250
3. Pine apple suckers	10,000
4. Suckers of Bananas and plantains	5,000
5. Lime and other citrus trees	300—400
6. Guavas, Rose apples, certain apples, papayas, etc. ..	100—200

There is no other agency worth the name engaged in this work in the State.

16. **Baroda.**—The Baroda State has a very concentrated centre of fruit growing in the Gandevi Taluka of the Navsari District. In this area, a continuous stretch of plantations of mango, chiku, banana and pineapple extends to over a length of about six miles with a breadth of about four furlongs on either side of the river Ambika. This area adjoins similar tract of the Surat District in the Bombay Presidency. In other places, plantations of fruits are scattered and far between.

It is in this area that a fairly large fruit nursery business has been built up by private enterprisers. There are at least a dozen fruit nurseries of standing in the region. Some of the nurseries transact a business amounting to Rs. 5,000 to Rs. 10,000 per annum. The total volume of business in planting stocks carried on in this area is estimated to be on a modest scale, about Rs. 30,000 annually. The plants sold out are chiefly mango grafts of different varieties, gooties and grafts of chikoo (Sapota), and suckers of banana and pineapple. Fruit plants of other miscellaneous varieties are also prepared locally, or obtained from Poona and other places in wholesale lots, and sold out to cultivators in retail by these nurseries. The plants are chiefly sent out through the Billimora and Amalsad Railway stations on the B. B. & C. I. Railway line.

The Baroda State has got one nursery of considerable size at Vyara (annual business Rs. 10,000), another at Dhari (newly-started), and a third at Kodinar (Kathiawar).

During the last three years, attempt is made by the Baroda State Department of Agriculture, to attach small fruit nurseries to the fruit plantations on the Government Farms at Baroda and Amreli (Kathiawar), as also to raise more

independent nurseries at Dhari and Kodinar, the last being yet under negotiations. These nurseries under direct control of the Department, are still intender infancy, but it is expected that they will be soon able to give out to growers considerable number of stocks of high and reliable quality.

The private nurseries mentioned above had none too good a reputation for supplying planting stocks, which could stand scientific scrutiny. The State Department of Agriculture, therefore, considered it necessary to bring them under some sort of control of the Department, by a process of voluntary registration, which was introduced in 1937-38. Under this system of registration, there are now in all seven registered nurserymen in the State. According to this voluntary scheme, the Department of Agriculture, which has got a specialist Horticultural section attached to it, recommends the registered nurserymen only to prospective fruit growers in the course of its district propaganda work in the villages. *Bona fide* certificates entitling the holders to reduced Railway freight charges on plants, were also issued by the Department to the registered nurserymen only, to the exclusion of unregistered ones. Besides this, new introductions of plants made by the Department are issued to the registered nurserymen on favourable terms. These are some of the instances of the Department patronising registered nurserymen.

On the part of the registered nurserymen, it is necessary for them to keep clear account of their transactions and record in full detail all the plants supplied by them to growers. They are also to take the responsibility of the quality and type of plants they supply, and in case of any complaint from growers who buy their plants, the nurserymen should make good any loss suffered by growers, by mutual agreement, if the complaints are considered by the State Horticulturist as a reasonable and duly substantiated. Of course, there is no legal binding on either side at present, as the scheme itself is on a voluntary basis. In the case of a registered nurseryman being found guilty of wrong practices or cheating, the only thing the Department can do at present, is to remove his name from its register, and stop recommending his name to growers. This scheme is found to work fairly satisfactorily during the short period it has been in force.

In the opinion of the Horticulturist, Baroda State, the following suggestions may be considered in any scheme of regulating the planting stock business of the country as a whole :—

(1) Standards, or grades of the quality of plants and grafts should be worked out for each type of fruits such as mango, citrus, chikoo, guava, etc. This should be done by a Committee of Horticultural Experts.

(2) These standards should be worked out in Government nurseries to begin with. Private nurserymen who are agreeable may be helped to introduce them in their own nurseries as circumstances permit.

(3) The system of voluntary registration of nurserymen should be introduced in all provinces and States on an all-India basis. This will help reliable plants being obtained from recognised nurserymen in the case of inter-provincial transactions.

(4) Planting stocks being perishable articles should be eligible for reduced railway freight charges at quarter parcel rate on all railways throughout India. *At present certain railways offer this* facility under *bona fide* certificate, while others do not. Pineapple suckers obtained from Barpathar (Assam) for Baroda, had to bear half parcel rate charges throughout the journey, although the B. B. & C. I. Railway line offers quarter parcel rate on plants.

(5) The method of packing plants should also be standardised.

17. **Bhopal.**—There is no such organisation in the State.

18. **Jammu and Kashmir.**—Deciduous fruits and citrus fruit plants are grown in Government nurseries by the Department of Agriculture wherefrom over 1,65,000 nursery plants are annually distributed either free of cost or on a nominal cost of one anna per plant to the *bona fide* zamindars. The plants are budded from tested scion mother trees and separate varietal record is being maintained.

The nursery stock is sprayed and fumigated against insect pests and fungoid diseases. The plants are distributed free among those zamindars who apply through the Revenue agency and undertake to fence the orchards against stray cattle and to spray against plant diseases and insect pests.

2. The following stock and scion is used for the various deciduous fruit plants in nurseries.

Deciduous Fruits.

Apple	.. Stock	.. Crab apples grown in forests. The stock is similar to Russian Crab.
	Scion	.. (*i*) Indigenous kinds, Amri, Trel and Turush ;
		(*ii*) Foreign kinds, a large number of European and American kinds.
Pear	.. Stock	.. Wild crab Pear.
	Scion	.. (*i*) Williams (Bartlet); and other foreign varieties ;
		(*ii*) Indigenous, Nakh.
Peach	.. Stock	.. Peach.
	Scion	.. Different varieties including Shalil.
Apriocot	.. Stock	.. Apricot.
	Scion	.. All varieties.
Prune	.. Stock	.. Apricot, prune ;
	Scion	.. European, American and Japanese kinds.
Almonds	.. Stock	.. Almonds.
	Scion	.. All kinds.

Cherries	.. Stock	.. Aprouts of wild cherries collected from forests ; Muzzards ; Morello.
	Scion	.. *All kinds of sweet cherries.*

Walnuts .. Chestnuts, Pistachios, Grape Vines budded on American.

Grape Vine Stock.

Other smaller deciduous fruits.

Sub-tropical fruits : Similar arrangements are made for dstribution of citrus, mango, loqat, and other plants. Last year, over 8,000 such plants were distributed.

APPENDIX XVII.

Supplementary Note on Subject No. 11-(a) :—The organisation of the multiplication and exchange of approved stocks of fruits.

In continuation of the note dated the 26th July 1939, the following extracts from a letter received from H. E. H. the Nizam's Government are circulated :—

> "The Agricultural Department has not so far done any research or experimental work on methods of propagation of fruits trees. Grafts, etc., are being supplied to the public prepared by the existing common methods. This work of propagation of stock is being done in the nurseries at the departmental farms at Himayat Sagar, Sangareddi, Rudrur, Warangal and Parbhani, besides temporary nurseries established at Aurangabad and Bidar. The plants are supplied to the customers either direct from the nurseries or through the district agricultural staff."

APPENDIX XVIII.

Note on Subject No. 12 (a) :—Rice research—Progress Reports—Bengal, 1938-39.

The following comments by the Statistician and the Assistant Agricultural Expert on the Report are circulated :—

(1) 'The Summary' in the beginning of the report is expected to be popular, Statistical Statements like 'One item among *second order interactions was statistically significant*' should be clarified by a further explanation of which particular interactions are significant and so on.

(2) The 'Complex Cultural experiment on Rice' has run for six years, and we should know where we stand with regard to this experiment. I have prepared a summary (Annexure) of the results of this experiment for the past six years, from which *it may be seen that the interactions are not consistently* significant. It is better that this experiment is now closed after a note on the results for the past six years is definitely recorded.

(3) The above remarks apply equally to the experiment on 'Study of primary effects and interactions of date of planting, age of seedling and variety'. The results of the last three *seasons should be summarised, with a view to know* whether conclusive results have been reached.

(4) In the case of all experiments where conclusive results have been established, 'The Economics' should be worked out.

Page 22. In studies in the effect of *jhanji* (Algol weed) help should be sought of workers engaged in the problem of nutritional effect of blue green Algol in paddy fields at the University of Dacca.

Page 39. In isolation of pure lines, studies of Agricultural and botanical characters of different strains should follow the lines laid down for rice and published in the Indian Journal of Agricultural Science Volume VIII, part V, October 1938.

In Hybridization studies advantage should be taken of the extensive work carried in this connection by Hector in Bengal.

ANNEXURE.

PART I.—*Complex Cultural Experiment on Rice.*

Variety.	Mean Yield.					Date of Planting.	Mean Yield.					Spacing.
	1933-34.	1934-35.	1936-37.	1937-38.	1938-39.		1933-34.	1934-35.	1936-37.	1937-38.	1938-39.	
NEHARA (EARLY) ..	111·45	144·93	110·99	81·97	85·26	July 16	173·71	194·28	217·81	142·39	135·38	6 Inches.
						August 1	191·19	200·25	218·27	130·20	144·50	
BHASAM ANIK (MEDIUM) ..	169·24	191·24	147·95	111·00	119·38	August 16	175·50	189·25	196·56	117·41	118·31	9 Inches.
BHASAKAIMA. (LATE)	144·12	187·07	148·10	111·83	120·14	Sept. 1	145·30	186·03	29·44	99·58	94·45	12 Inches
						Sept. 16	22·32	123·47	16·33	20·00	48·66	
S. E.	1·46	2·27	11·00	3·97	2·71	..	4·22	4·30	17·77	9·42	4·10	..

Mean yield of grain in ounces per plot.

1935-36.

The precarious rainfall of this season however completely upset the second factor, *i.e.*, the dates of planting.

PART II.—*Complex Cultural Experiment on Rice.*

Variety.	Mean Yield.					No. of Seedlings per hole.	Mean Yield.				
	1933-34.	1934-35.	1936-37.	1937-38.	1938-39.		1933-34.	1934-35.	1936-37.	1937-38.	1938-39
NEHARA. EARLY) ..	149·61	176·22	139·52	103·70	110·29	1 Seedling	134·90	175·13	137·44	98·05	108·45
BHASAMANIK. MEDIUM) ..	142·96	195·60	135·05	101·41	109·44	2 Seedling	142·71	176·99	135·12	90·57	107·88
BHASAKAIMA. (LATE)	132·24	172·15	132·46	99·58	105·06	Local Method.	147·20	171·84	134·49	107·18	108·45
S. E.	3·17	4·59	3·73	2·47	1·02	..	3·17	4·59	3·73	2·47	1·02

Mean yield of grain in ounces per plot.

1935-36.

The precarious rainfall of this season however completely upset the second factor, *i.e.*, the dates of planting.

APPENDIX XIX.

Note on Subject No. 13 (a) :—Technical programe of work under the Rice Research Scheme, Central Provnces.

A detailed programme of work in respect of the rice research scheme, *Raipur, Central Provinces, drawn up for the extended period of two years* from the 1st April 1939, is appended (Annexure).

2. The scheme was initiated on the 1st September 1932. The present extension was recommended by the Advisory Board at its meeting held in March 1938 (*vide* pages 39, 127, 233-238 of the printed proceedings).

3. The programme will first be examined by the Rice Committee whose report will be submitted to the Board in due course.

ANNEXURE.

RICE RESEARCH SCHEME, CENTRAL PROVINCES.

Detailed technical programme of work for 1939 and 1940.

1. *Genetical work.—(a) Inheritance of endosperm characters.*—The inheritance of endosperm characters in F_2 and F_3 generations of the following crosses will be studied :—

R. 2-E. B. No. 17	×	*Blue Rose.*
(Endo.—translucent).		(Endo.—abdominal white).
R. 7.—*Gurmatia*	×	*Blue Rose.*
(Endo.-translucent).		

Prolific strains with bold and translucent rice, suitable for the export market, will be isolated from the above crosses.

(*b*) *Inheritance of scent in rice.*—The inheritance of aroma in rice will be studied in F_2 and F_3 generations of the following crosses :—

R. 10.—*Chhatri,* (scented) × R. 2-E. B. No. 17, (non scented).

R. 6-*Budhiabako,* (non scented) × R. 10-*Chhatri,* (scented).

The above crosses have been made with the object of improving the yield of scented varieties.

(*c*) *Inheritance of habit of growth.*—The study of the inheritance of habit of growth will be continued in F_3 generation of the following crosses :—

R. 8-*Luchai,* (erect) × R. 6.-*Budhiabako,* (spreading).

R. 8-*Luchai,* (erect) × R. 7-*Gurmatia,* (spreading).

These crosses have been made with a view to infuse erect habit in the high yielding strains.

(*d*) *Inheritance of length of rice.*—The inheritance of length of rice (husked grain) will be studied in F_2 and F_3 generations of the following crosses :—

(*i*) Kernels Very short × Short.
(Raskadam × Kherabasant).

(*ii*) Kernels Very short × Medium.
(Raskadam × Kherabasant).

(*iii*) Kernels Very short × Long.
(Raskadam × Basant).

(*iv*) Kernels Short × Medium
(Kherabasant × Laldhan).

(*v*) Kernels Short × Long.
(Kherabasant × Basant).

(*vi*) Kernels Medium × Long.
(Kherabasant × Basant).

2. *Selection and breeding.*—(*a*) *Hybrids for fields infested with wild rice.*—The following hybrids which are entirely purple in colour and can be easily distinguished from wild rice will be tested for yield against the parents in Randomised Blocks with six replications.

EARLY.

R. 2-E. B. 17 × *Nagkesar*, F_6. No. 1|9.

MEDIUM RIPENING.

Nagkesar × *Bhondu*, F_5. No. 2|162, No. 64, No. 109 and No. 171.

Nagkesar × R. 6-*Budhiabako*, F_5. No. 3|143, No. 90, No. 195 and No. 104.

LATE.

Nagkesar × R. 7-*Gurmatia*, F_5. No. 4|40, No. 31, No. 35, No. 43 and No. 44.

Nagkesar × R. 8-*Luchai*, F_5. No. 5|47, No. 50 and No. 68.

Propagation and distribution of Cross No. 19 (Budhiabako × Parewa) and Cross No. 22 (Bhondu × Parewa) will be continued.

(*b*) *Isolation of high yielding varieties suitable for the three main rice growing tracts of the province.*—The following varieties will be tested for yield against the improved strains in Randomised Blocks with nine replications. They have been selected from 550 varieties originally under preliminary yield tests.

Early.	*Late.*
Anterbed.	Sonapan.
Shakkarchini.	R. 7-Ajan.
R. 1.-Dilpasand.	R. 7-Gurmatia.
R. 2-Nungi (E. B. 17).	Anjania.
Chipda.	Dhawar.
Jalchinga.	R. 8-Benisar.
R. 2-Sultugurmatia.	R. 8-Luchai.

Medium ripening.

R. 4-Surmatia.
Jagannath.
Mohanbhog.
R. 5-Ludko.
Baikoni.
Bhulaoo.
Bakia.
R. 6-Budhiabako.
Katechinga.
Hansa.
Cross No. 19.
Cross No. 22.
Cross No. 116.

Fine and scented varieties.

R. 10-Chhatri.
R. 11-Banspatri.
R. 12-Kubrimohar.
R. 13-Badshabhog.
R.-14-Dudhkhowa.
Hiranakhi.
R. 15-Chinoor.
Motichur.
R. 16-Kalikamod.
R. 17-Chinoor.

The tests will be conducted at Raipur, Waraseoni and Jubbulpore.

Seventy different strains of paddy received from other provinces will be tested against the local strains.

3. The study of morphological characters of 710 different varieties of paddy grown in the Central Provinces will be continued. (Schedule proposed for rice in the Ind. J. Agri. Sci. 1938, VIII, V, 596.)

4. *Natural cross pollination in rice.*—The percentage of natural cross pollination in rice and the distance to which it can occur will be determined by growing a colourless strain alround a central plot of coloured variety. The individual lines will be six inches apart. Each line of the colourless strain will be harvested separately and a random sample of 5,000 grains will be grown to determine the percentage of coloured plants.

5. *Root system of rice.*—The study of root development in transplanted and *biasi* rice grown in *matasi* (saudy loam) and *dorsa* (clay loam) soils will be continued. A circular trench 1½ feet away from the base of the mature plant will be excavated to a depth of 2 feet and the root system will be exposed by a stream of water from a sprayer.

6. *Hulling tests.*—The milling quality of improved strains harvested at different intervals after flowering will be studied. The tests will be carried out in Engelberg huller and the percentage of whole rice, broken rice and husk determined.

7. *Field experiments.*—Manurial experiments, 1939 and 1940.

Experiment 1 (a).—To find out the effect of different quantities of nitrogenous and phosphatic fertilizers applied singly or in different combinations.—The design of the experiment will be 3^3 as recommended by the Field Experiments Committee. The total number of treatments will be 27 *consisting of three varieties* (R^2, R^{10} and R^6) × three levels of nitrogen in the form of Ammonium Sulphate (0 lb., 10 lbs., and 20 lbs. of N per acre) × three levels of P_2O_5 as superphosphate (0 lb., 10 lbs. and 20 lbs., of P_2O_5) per acre. The experiment will be conducted on the *Matasi* (sandy loam) soil at Raipur, Waraseoni and Jubbulpore and the

size of the individual plot will be 1|40th of an acre with border and 1|50 of an acre ($13\frac{3}{4}' \times 63'$) without border.

Experiment 1 (b).—Comparison of organic and inorganic manures and their mixtures.—The design of the experiment and the method of layout (7 × 6 Randomised Block arrangement) will be according to the recommendations made by the Field Experiments Committee. The treatments will consist of one variety (R^6) × three levels of inorganic Nitrogen in the form of Ammonium sulphate (0 lb., 10lbs. and 20 lbs. of Nitrogen per acre) with similar three levels of organic Nitrogen in the form of farmyard manure (with Nitrogen in air dry samples—0 8 per cent.). The experiments will be conducted at the same places as No. 1 and the size of individual plots will also be the same.

CULTURAL EXPERIMENTS.

Experiment 2.—Comparison of transplantation and biasi *(broadcast sowing followed by cross-ploughing) under different manurial treatments.* —The method of layout will be 2^4 as recommended by the Field Experiments Committee. The total number of treatments will be 16, consisting of two varieties (R^2 and R^6) × two methods of cultivation (transplantation and *Biasi*) × *two levels of nitrogen (0 lb. and 10 lbs. Nitrogen per acre)* × two levels of P_2O_5 (0 lb. and 10 lbs. P_2O_5 per acre). The experiment will be conducted on *Matasi* (sandy loam) soil, and area of each plot will be 1|30 of an acre with border and 1|40 of an acre ($17\frac{1}{3}' \times 61\frac{1}{3}'$) without border.

IRRIGATION EXPERIMENTS (1939 AND 1940).

Experiment 3.—Comparison of watering intervals and quantities of water in a split plot design with one variety (R^6) as recommended by the Field Experiments Committee. The treatments being two intervals (7 days and 15 days) and three quantities (3 acre inch, 4 acre inch, and 5 acre inch). The experiment will be conducted on *Dorsa* (clay loam) soil and the size of each plot will be the same as in experiment No. 3. To reduce the effect of percolation of water non-experimental unirrigated plots will be introduced between adjacent experimental plots.

APPENDIX XX.

Note on Subject No. 13 (b) :—Technical programme of work under the Rice research (extension) scheme, United Provinces.

A detailed programme of work in respect of the rice research scheme, Nagina, United Provinces, drawn up for the extended period of three years from the 1st April 1939, is appended (Annexure).

2. The Scheme was initiated on the 1st April 1932. The present extension was recommended by the Advisory Board at its meeting held in March 1938 (*vide* pages 39, 127 and 233 of the printed proceedings).

3. The programme will first be examined by the Rice Committee whose report will be submitted to the Board in due course.

ANNEXURE.

TECHNICAL PROGRAMME OF RESEARCH TO BE CARRIED OUT AT NAGINA WITH RESPECT TO THE RICE RESEARCH EXTENSION SCHEME, COMMENCING 1939.

The Rice Research Station, Nagina, U. P., financed by the Imperial Council of Agricultural Research is now in its 8th year of working. During the past 7 years the station has concentrated all its attention to ultimate aim, namely, " The improvement of paddy crop in general ". The various aspects of the work have been described every year in the Annual Reports of this station. In view of the experience gained in the past the technical programme of research for the extension scheme commencing 1939 has been slightly modified, and consists of :—

1. Breeding and Genetical works.
2. Field Experiments.
3. Hulling Trials.
4. Cooking tests.

The details are presented below :—

1. *Breeding and Genetical Work.*—The collection and study of new varieties from abroad and from different parts of India will be continued. A survey of the remaining main paddy growing districts of U. P. will be completed, which will it is hoped give exact information on the requirements of different tracts.

The selection of strains from varieties collected will be continued. Some of the most promising ones will be put in preliminary yield trials.

Hybridization has been practised with the object of improving the yield and quality of varieties of different durations and also for combining enclosed sheath character as possessed by *Sathi* variety, with better yield and grain of the open panicled forms.

Most of the paddy used for hybridization is transplanted. The nursery of the cultures consist of small sized (3′ × 4′) beds with channels running in between adjacent rows of beds to ensure irrigation.

Plan of transplanting.

Except in the case of F1, F2 and pure lines the cultures are transplanted in beds of 16′ × 4′ size, each culture consisting of four rows of 16 feet length, the rows being one foot apart, with plants spaced at 6 inches. Each culture thus has about 130 plants, reduced to about 100 plants through subsequent mortality of seedlings. The F2 cultures are transplanted in rows of 40 feet length and the pure lines consist of single lines each 20 feet long and the adjacent lines are 2 feet apart. The transplanting of the cultures is usually done one month after sowing.

Work on Sathi Crosses.

It has been stated in previous reports that these crosses were intended for combining the enclosed sheath character of *Sathi* with the yield and quality of the better grained open panicled early types so that the *Gundhi* fly would have no access to the grains of the hybrids. These crosses are now in the F10 stage and consist of 86 cultures the majority of which are pure for most of the characters. However, further selections are necessary, Some hybrids are already being tested in the preliminary yield trials, and as more are evolved they will be similarly tested. Besides the preliminary trials, large scale trials both under broadcast and transplanted conditions will be conducted at Nagina before the hybrids are finally released for distribution.

The exact plan of study of the *sathi* hybrids will be to study the sheathed ear character, the earliness, shape of grain, yield, sterility, and selections will be made on these basis.

Work on other crosses.

There are 77 F10 early and 111 F10 late cultures of crosses between early and late types in the present year. Observations on sheath, glume colours, awns sterility, grain sizes, kernel colour and flowering date, height, tillering, resistance to lodging, shedding and yield will be made in subsequent years. Some hybrids are already under distribution and more are to be released after exhaustive large scale yield tests at Nagina.

Cross in F7 generation.

(Cross T110 × T26). It is a cross between two late types and was made in order to combine the better yield of T110 with good quality of T26. 19 families were stndied in the present season.

Cross in F6 generation.

(Cross T75 × T76). This is a natural cross and was taken for study of inheritance of clustered character of spikelets which, is the peculiar feature of T75. Selections were made in order to yield different segregates for demonstration purposes.

Crosses in F5 generation.

(Cross T1 × T21). This is a cross between two medium early types (of which T1 is earlier) and aims at providing heavy yielding hybrids of the duration of T1. T21 is a good yielder but possesses a longer duration than that what meets general approval. Selections will be continued to be made on the basis of earliness and good grain than T21.

(Cross Tex 7 × T1). This is a cross between T1 and an early variety from Texas and designs to give hybrids possessing strong stand, heavy yield and early maturity.

(Cross T21 × T85). It is aimed to breed a heavy yielding hybrid of medium early duration.

(Cross T1 × T43). Both the parents are early. It is aimed to combine the better grain of T1 with the yield and awnedness of T43. T43 being strongly awned is suitable for areas where damage from wild beasts is common.

(Cross T7 × T43). Made for an aim similar to that given for the preceding cross.

(Cross T73 × T96). Both the parents are early. T96 tillers well while T73 possesses long ears. Attempt will be made to breed well tillered long eared hybrids.

(Cross T112 × T122). The parents are very early. The cross aims at giving very early hybrids of better yield.

(Cross T23 × T110). This is a cross between late types and aims at combining the fragrant grain of T23 with better yield of T110.

(Cross T36 × T127). A cross between two late types of which T36 possesses longer ears and heavier yield. It was made to combine heavy yield with awnedness to suit 'Khadar' areas.

Cross in F4 generation.

(Cross Ch. Purple × T12). These two early types were crossed in order to demonstrate the inheritance of purple colour in the various organs of the plant. Some promising early and medium early plants were observed.

Crosses in F3 generations.

(Crosses Ch. 3 × T1, Ch. 3 × T12 and Ch. 6 × T12). These Ch. (*i.e.*, China) varieties are very early but coarse grained and the crosses aim at providing very early hybrids of suitable grain and yielding capacity.

(Cross T60 × T66). It is a cross between two late types of which T60 has fragrant grain. Heavy yielding fragrant hybrids will receive special attention.

Crosses in F2 generations.

F2 plants of eleven crosses were raised during the year. They were made for the following reasons :—

(a) To evolve very early varieties with adequate yield and slender grain. Most of the very early varieties grown in U. P. possess coarse grain but if hybrids are bred which in addition to qualities (earliness, yield and hardiness, etc.) possessed by these varieties possess better quality grain or stiffer straw

they will play an important role. The crosses were made as follows :—

1. Ch. 3× T1.
2. Ch. 3 × T12.
3. Ch. 6 × T136.
4. Ch. 6 × T1.
5. Ch. 6 × T12.
6. Ch. 10 × T1.
7. Ch. 10 × T12.
8. Ch. 10 × T136.
9. Cal. 1 × T1.
10. Cal. 1 × T12.
11. Cal. 1 × T136.

(b) To combine aroma with yield.

F1 Crosses.

Back crosses between three *sathi* hybrids and T12 were made. Besides each of Ch. 3, Ch. 6, and Ch. 10 was again crossed with T1, T12 and T136. Another cross between Ch. 10 and T3 was made in order to breed very early, fragrant grained varieties.

T3 was crossed with T43 also with a view to breed varieties with quality of T3 but with awnedness of T43 to save them from wild anima's.

It will therefore appear from the foregoing that plenty of useful material exists for detailed study at Nagina for a number of years. The nature of inheritance being what it is, no short cut methods can be appl'ed to arrive at conclusions, and the hybridization work must take its own course. It is a continuous process and as new ideas about the requirement of paddy in different tracts are accumulated, so the studies have to be diverted to meet these demands. New crosses must be made every year and selections made subsequently to evolve the desired strains.

2. *Field Experiments.*—Most of the manur'al and cultivation experiments at Nagina having had a run of 3 or 4 years, it became necessary to replace them with experiments which would integrate more completely with a systematic scheme of experiments at other stations. The time was therefore prop'tious for incorporating into Nagina programme the experiments suggested by the Joint Coummittee on Field experiments and manurial experiments of the I. C. A. R.

The manurial experiments are those suggested by the Joint Committee with an addition of ' Qualitative Manurial Experiment ' from the last year's programme. This will be in its second year and the rest in their first year. One of the suggested experiments, *viz.*, ' comparison of varieties and their response to manuring ' has been modified by reducing the varieties from 7 to 6 keeping two manurial levels, in order to fit the existing lay out of plots. The l'me experiment is an addition from last year's programme, and is in its third year. The ' manurial and irrigation experiment ' has been slightly modified from last year. The dose of water has been changed from 25″ and 50″ (in addition to rain) to 20″ and 40″ as suggested by the Statistician to the Council to conform with the new Irrigation Experiment laid down this year.

The Early Types Broadcast Trial has been retained from last year because it is in its 3rd year and will in itself be replaced by new early, types in subsequent years. A new 'late types' trial and a new 'late Hybrids' trial have been laid down.

Of the semi-field scale trials the 'very early varieties—Broadcast and Transplanted' trials are continued from last year and will be in their second year.

One more semi-field scale trial, *viz.*, 'Medium Early Varieties and Hybrids Broadcast' has been added. This will be conducted only under broadcast condition.

The preliminary trials will be according to Quasifactorial designs. The more promising varieties only as revealed from last year's trials have been included in these trials. A more accurate grouping on the basis of duration has been made than was done in previous years. 6 such trials have been laid down.

The study of germination of seed collected at regular intervals to find out the proper time of harvesting the crop and determine the viability of the seeds has already been completed at Nagina and the results of study have been brought together in the form of a technical paper which is in the press.

With the inception of new Paddy Sub-Station at Gorakhpur an indigenous practice of JARAI came to light. This treatment includes an initial germination of seed and drying them before finally broadcasting them, when the monsoon breaks in, and is supposed to hasten germination, prevents washing away of seeds by providing them with better foot hold and also in general to give a better crop. It is to test the accuracy of this belief of the local cultivator that the seed treatment trial has been retained.

Growth studies in relation to different meteorological factors have been made since 1933 at Nagina and are still continuing. They must be continued for a number of years before useful correlations can be worked out.

Water requirement experiments on paddy have been conducted at Nagina since 1934 under field conditions. But they have unfortunately failed to give any conclusive results. The reason for erratic results from year to year may be that the watering is difficult to control under these conditions, and the amount of rainfall received in a particular year appears to be the determining factor. To overcome this difficulty a pot experiment was started in 1938 to determine the water requirement of paddy at different stages of its growth under strictly controlled conditions. This has been fully reported in the Annual Report for 1938-39. The results proved so convincing that it was considered desirable to conduct the same experiment slightly modified this year also. The details are given in the following pages.* In conjunction with the two water requirement experiments already being conducted under field condtions, it is felt that the pot experiment will yield valuable supplementary information on the subject, and hence it has been decided to keep it.

*Not printed.

3. *Hulling Trials.*—Breeding and the Agronomic work important, as they are, have not been the only items studied at Nagina. In any scheme of paddy improvement, the commercial side cannot be lost sight of, because it is in the form of rice that paddy is mostly consumed. Since the beginning of the scheme, importance has been given at Nagina to the hulling quality of paddy and a paper has been published on the subject in the Indian Journal of Agricultural Science, Vol. VII, Part V, October 1937. Much, however, still remains to be done. As new strains are evolved, it is necessary to test them as to whether they are fit from the commercial point of view, and to study the influence of factors on their hulling qualities.

The following programme is therefore proposed for the coming season :—

I. The effect of harvesting paddy at different maturities on the hulling qualities.

The crop from selected strains will be harvested at regular intervals of 4 days, *i.e.*, 20, 24, 28, 32 and 36 days after flowering, and this will be hulled after drying at various temperatures in sun and shade.

II. The effect of drying paddy for 1, 2 or 3 days in the sun on hulling.

Paddy harvested at maturity will be exposed to sun for 1, 2 or 3 days and then hulled. This will give the most economical time for drying paddy before hulling.

III. Storing paddy for 2 months and then treating it as follows :—

(a) Soak it in water for 12 hours dry it in sun and hull.

(b) Hulling without soaking.

(c) Hulling after drying in sun for 2 or 3 days.

This will give indications to the critical level of moisture that must not be transgressed before hulling.

Details of these experiments have been given in the Annual reports.

4. *Cooking Tests.*—Before the improved strains are sent out from Nagina, they are subjected to critical cooking tests to know their cooking qualities. The methods of cooking followed are those adopted by the marketing office to the Government of India.

A. K. MITRA,
*Economic Botanist (Sugarcane and Paddy)
to Government, United Provinces,
Shahjahanpur.*

The 12th September 1939.

APPENDIX XXI.

Note on Subject No. 13 (c) :—Rice research—Technical Programmes—Travancore Paddy Research Scheme.

A copy of a technical programme of work under the scheme for the improvement of paddy in Travancore is attached (Annexure). The Scheme was recommended by the Advisory Board in November, 1938 and the Governing Body has sanctioned it, subject to funds being available, for a period of three years from 1940-41.

2. The programme will first be examined by the Rice Committee, whose report will be submitted to the Board in due course.

ANNEXURE.

TECHNICAL PROGRAMME OF WORK TO BE UNDERTAKEN UNDER THE SCHEME FOR THE IMPROVEMENT OF PADDY IN TRAVANCORE.

The rice-soils at the proposed centres (North Travancore and Central Travancore) fall naturally into two classes.

I. The tidal lands in North Travancore involve an area of 1,50,000 acres. The rice types met with in this area are mostly low-yielding. There are saline, acidic and inundated groups in this area. The proposed programme of work in the station for this area is as follows :—

(1) A survey and collection of the rice types that are generally met with in this area including (*a*) salt resistant types (*b*) acid resistant types and (*c*) flood resistant types.

(2) Selection of early high yielding strains.

(3) Selection of early high yielding salt resistant strains.

(4) Selection of high yielding acid resisting types.

(5) Selection of high yielding flood resistant strains.

(6) Introduction of promising types from outside the District or State.

(7) Acclimatisation of the promising introduced strains.

(8) Evolution of quality rices.

(9) The carrying out of a standardised manurial experiment.

II. The lateritic areas of Central Travancore (Virippu lands). The fields in this area are cultivated twice a year. The first crop is a broadcast crop, and the second a transplanted crop. The programme of work for this station is as follows :—

(1) A survey and collection of the rice types grown in and around the area.

(2) Selection of promising types.

(3) Introduction and acclimatisation of early high yielding types.

(4) Evolution of drought resistant types for high lands where water scarcity frequently happens.

(5) Evolution of quality rices.

(6) The carrying out of a standardised manurial experiment.

APPENDIX XXII.

Supplementary note on Subject No. 13 (c) :—Rice Research—Technical Programmes—Travancore Paddy Research Scheme.

In continuation of the note date the 11th October 1939 (Appendix XXI), a copy of a detailed technical programme of work under the scheme revised in consultation with the Agricultural Commissioner with the Government of India, is attached for consideration (Annexure).

ANNEXURE.

DETAILED TECHNICAL PROGRAMME OF WORK TO BE UNDERTAKEN UNDER THE SCHEME FOR THE IMPROVEMENT OF PADDY IN TRAVANCORE.

I. The revised scheme for the improvement of paddy in Travancore was sanctioned at the meeting of the Advisory Board of the Imperial Council of Agricultural Research held in November 1938 and the work proposed and approved is given on pages 3 to 5 of that printed scheme. The detailed technical programme is given below.

II. *North Travancore.*—The rice types met with in this area are mostly low-yielding. There are saline, acidic and inundated lands in this area.

Place.—A block of 25 acres at Mankompu in Kuttanad area is proposed to be taken.

Problems and methods of attack.

(1) A survey and collection of the rice types of this area, with observations on salt resistance, acid resistance and flood resistance of the types collected as a basis for selection (These will be grown in plots of one cent. per type, with a duplicate series—About one acre.)

(2) Selection for high yield and earliness combined with one or other of the qualities, salt resistance, acid resistance, flood resistance. (This can of course only take place after the types have been collected. The size of plot per selection will be not less than one cent. and the number of replications will be decided later—About 2 acres.)

(3) It is proposed to try some salt resisting types from Bombay and flood resisting types from Assam. It is anticipated that the difference in length of day may cause some difficulty in the case of the Assam rices ; but it is thought worth while trying these. (About one acre for these introductions which will be in duplicate.)

(4) *Standardised manurial experiments.*

N. P. K. Experiments as laid down by the joint committee on Field Experiments. (About 4 acres.)

III. *Central Travancore.*—The fields in this area are cultivated twice in a year. The first crop is a broadcast crop ; and the second a transplanted crop.

Place.—Kayamkulam.

A new Farm with an area of 20 acres is proposed to be opened.

Problems and methods of attack.—The area is lateritic and as stated at the outset two rice crops a year are grown on the same ground.

(1) A survey and collection of the rice types of the area (one cent. plots in duplicate on a total area of one acre).

(2) The first crop is broadcasted in May and harvested in August and lasts approximately 100 days. Selection will be made for yield, drought resistance and earliness—Two acres.

(3) The second crop (transplanted) is transplanted in February and is of about 140 days duration. Selection will be made for yield and drought resistance.

Earliness is considered not so important for the present. (Two acres.)

(4) There will be a plot for promising varieties from other parts of India with similar conditions. (One acre.)

(5) Standardised manurial experiment.

N. P. K. as in *part II* (about 4 acres).

The total area under experiments in North Travancore is estimated at 8 acres to begin with and that in Central Travancore at 10 acres, but naturally more space will be required as selections multiply, particularly *when the stage of comparing selections by randomised* experiments is reached.

APPENDIX XXIII.

Note on Subject No. 13 (d) :—Rice Research Schemes—Technical Programmes—Baroda Paddy Research Scheme.

A copy of a technical programme of work to be undertaken on the black soil at Dabhoi, Baroda State, Open Cultivation Paddy Improvement Station, is attached (Annexure).

2. In November 1938 the Advisory Board recommended a scheme for the improvement of paddy in Gujarat, in particular under open field conditions and a study of economic cropping under the conditions in which this crop was so sown on the heavier grades of black soil in Gujarat. A peculiar feature of paddy cultivation in this area is that it is grown along with cotton. The Governing Body decided to allot funds for the scheme for *a period of three years from 1940-41,* subject to funds being voted by the Central Legislature.

3. The programme has been prepared for a period of five years. The scheme will be coming into existence in 1940. As a matter of fact it is reported that a certain amount of collection of likely paddies has been made this year and these varieties are under observation. The sketch plan referred to in the programme will be circulated, if necessary, at the meeting.

4. The programme will first be considered by the Standing Rice Committee who will report to the Board in due course.

ANNEXURE.

TECHNICAL PROGRAMME OF WORK PROPOSED FOR THE RICE RESEARCH SCHEME AT DABHOI.

1940-41.

Exp. I.—Non-replicated observation plots.

A number of open cultivated paddy types obtained from various sources besides those locally known will be sown in small observation plots 15′ × 15′ under various conditions namely, (*a*) under conditions of open cultivation depending entirely on natural conditions as regards rainfall, etc., for comparing with the local types, (*b*) under conditions of open cultivation but receiving irrigation under adverse conditions meant mainly for the multiplication of the seed, and (*c*) under Kyari conditions to see if any of these types do well and deserve a trial in places where water facilities are available.

Exp. II.—Search for suitable types in Gujrat.

(*a*) The tract to be surveyed for finding out any other suitable types both open cultivated and those grown in Kyaris.

(*b*) Selection work within principal local types of open cultivation.

Exp. III.—Small scale replicated trials under Kyari and open cultivated conditions.

(*a*) About four open cultivated paddy types to be put in a replicated randomized experiment with 8 replications arranged in

two strips of 2 types each. Each plot area : 15′ × 15′ and experimental : 12′ × 11′. Each block area : 30′ × 30″ and experimental :—24′ × 22′. Total dimensions of the experiment :—63′ × 140′ including paths and ring lines, etc. Sketch plan attached herewith.

(b) About 5 early types of Paddy drilled in Kyaris replicated 6 times in plots each 6′ × 35′ with experimental as 4½′ × 31′. Each block area :—30′ × 35′ and excluding non-experimental :—22½′ × 31′. Sketch plan attached herewith.

(c) About 5 late types transplanted in Kyaris replicated 6 times in plots each 12′ × 40′ and experimental as 10′ × 36′. Each block area :—60′ × 40′ and excluding non-experimental :—50′ × 36′.

Exp. IV.-Manurial Experiment combined with Irrigation and fallow and Green manuring in the fallow year.

Paddy sown in alternate lines with B. D. 8 cotton. Distance between paddy and cotton lines :—2½′. Buri cotton to be used as ring lines. Total length of the plot :—485′ × 224′ including paths, etc. Size of the main irrigation plots :—150′ × 70′ and experimental as 120′ × 60′ in two lots of 60′ × 60′ for fallow and green manuring respectively. The area of the individual manurial sub plots :—25′ × 70′ and excluding ring lines, etc. :—20′ × 60′. The treatments are as follows :—

Irrigations :	Two,	One.,	Nil.

Fallow and Green manuring in the fallow year—

Manuring :	None	30 lbs. of Nitrogen as Am SO4 per bigha.	30 lbs. of Nitrogen as Niciphos per bigha.

Sketch plan attached herewith. The experiment has already been laid down in 1939-40 as per details given above.

Exp. V.—Rotational experiment in black soils.

In this experiment seven variations in the fallow year prior to Cotton and Paddy are replicated 6 times for comparing the alternative rotations with cotton in black soils.

Total length of the plot :—355′ × 224′.

Each plot area :—25′ × 70′ with experimental :—20′ × 60′.

Size of each block :—175′ × 70′ and experimental :—140′ × 60′.

Paddy will be sown in alternate lines with B. D. 8 cotton at a distance of 2½′. The treatments in the fallow year are as follows :—

1. Fallow.
2. Fallow green manure.

Fallow green manure + Bonemeal.

4. Summer fallow and Jowar.
5. Summer fallow and Tur.
6. Green manure and Jowar.
7. Green manure + Bonemeal and Jowar.

Sketch plan attached herewith. The experiment has already been laid out with treatments given as above.

Exp. VI.—Rotational experiment in bessar soils.

In this experiment the effect on cotton of rotations suited to Bessar soils will be examined. There will be three blocks covering the 5 years of the rotation. The blocks will be 300′ × 100′ each divided into 5 and then subdivided to 4 plots of 25′ × 60′ each giving experimental area as 20′ × 50′.

Sketch plan attached herewith. The experiment has already been laid down as per details given above.

1941-42.

Exp. I.—Non-replicated observation plots.

To be continued.

Exp. II.—Search for suitable types in Gujerat.

(*a*) and (*b*) to be continued.

Exp. III.—Small scale replicated trials under Kyari and open cultivated conditions.

(*a*), (*b*) and (*c*) to be continued.

Expts. IV, V, and VI to be continued.

1942-43.

Exp. I.—Non-replicated observation plots.

To be continued as before. This will be the third year for all the types since put under observations and at the end of this season it should be possible to locate a few suitable types.

Exp. II.—Search for suitable types in Gujerat.

(*a*) Isolation of pure types to be continued.

(*b*) Promising selections in the local open cultivated principal types of Paddy to be put in a small progeny row trial for elimination of the inferior progenies and multiplication of the superior ones.

Exp. III.—Small scale replicated trials under Kyari and open cultivated conditions.

(*a*) . (*b*) and (*c*) all these will be continued with the addition of any other types that may prove promising by now.

Expts. IV, V and VI to be continued.

1943-44.

Exp. I.—Non-replicated observation plots.

These may be continued this year though it is expected that three years' data already collected should be enough to give an idea of the number of types suitable for our purpose.

Exp II.—Search for suitable types in Gujerat.

(*a*) Isolation of pure lines to be continued.

(*b*) Promising progenies to be put in compact family blocks with approximately 16 total progenies with 6 replications.

Each line 26′ in length and sown 18″ apart.

Area of the block : 27′ × 26′ and excluding non-experimental : 24′ × 22′.

Exp. III.—Randomized replicated trials of Paddy Types.

(*a*) A few open cultivated paddy types to be put in a yield trial in 6 replications.

(*b*) and (*c*) Both the drilled and transplated types of Paddy will be put in separate experiments in 6 replications in plots : 40′ × 50′ and experimental : 36′ × 46′ each.

Expts. IV, V, and VI to be continued.

1944-45

Exp. I.—Non-replicated observation plots.

These may be continued if the results of the previous years require confirmation

Exp. II.—Search for suitable types in Gujerat.

(*a*) Isolation of pure lines.

(*b*) Promising types put under experiments in Exp. III.

Exp. III.—Randomized replicated trials of Paddy types.

(*a*) About 5 best open cultivated Paddy types to be tried in a yield trial in alternative lines with B. D.-8 cotton with 6 replications. Each plot area will be 25′ × 100′ and that excluding non-experimental will be 20′ × 90′.

(*b*) and (*c*) About 4 best types of both drilled and transplanted types of Paddy each, to be tried in separate yield trials with 6 replications. Each plot area : 60′ × 50′ having experimental area : 52′ × 42′.

Expts. IV, V, and VI.—To be continued.

APPENDIX XXIV.

Note on Subject No. 13 (d) :—Technical Programmes—Baroda Paddy Research Scheme.

In continuation of the note, dated the 3rd October 1939 (Appendix XXIII), the following comments by the Statistician are circulated for consideration.

(1) *Experiments I and II.*—This is an *observational* trial and may be laid out in a ' Pseudo-factorial ' design so that some valid interpretation may be possible. (This design is now being recommended in all preliminary trials.)

(2) *Experiment III* (a), (b) *and* (c).—

(*i*) the plot area is very small.

(*ii*) In the case of (*a*), instead of having square plots, it is better to lay down plots (30 × 7½ gross) of oblong shape and running across the direction of blocks as shown in the plan. This is considered more useful from the point of view of ' local control '.

(*iii*) *In the case* (*b*) *also the same procedure may be followed* (as also shown roughly in the plan).

(3) *Experiments IV and V.*—The experiments have already been laid out and the plans are alright. In the analysis of the results of experiment IV, the different errors should be considered in interpreting the results.

(4) *Experiment VI.*—The plans is alright, but details are lacking with regard to dates of sowing, etc., of rotational crops.

APPENDIX XXV.

Note on Subject No. 13 (e) :—Rice Research—Technical Programmes—Kashmir Rice Research Scheme.

A copy of a technical programme of work under the scheme of rice research in Kashmir is attached (Annexure). The Scheme was recommended by the Advisory Board in March 1938 and sanctioned by the Governing Body subject to funds being available, for a period of three years from 1940-41.

2. The programme will first be examined by the Rice Committee, whose report will be submitted to the Board in due course.

ANNEXURE.

TECHNICAL PROGRAMME.

RICE RESEARCH SCHEME.

To be worked in Kashmir under the auspices of The Imperial Council of Agricultural Research.

1. (*a*) Survey and collection of different types of rices grown in different zones from 1000′ to 8000′ altitude ;

(*b*) Study of their behaviour and response at 5300′ and 2000′ altitude, the two places where the research work has to be conducted ; and

(*c*) Grouping of hill rices by different altitudes where these grow successfully.

2. Introduction of foreign varieties, both Indian and Exotic :

(*a*) study the behaviour of successful varieties ;

(*b*) experiments on vernalisation of seeds of some of the principal exotic varieties which do not mature during the rice season in Kashmir, so that the period of duration may be reduced.

3. Crossing of principal standard local varieties with newly introduced kinds for fineness and aroma :

(*a*) standardising the parents used for crossing amongst the local kinds. The predominantly grown *Mushka-Budiji*, *Babar* and *Lolanzan* will be tried ;

(*b*) crossing of low yielding awned hardy varieties of rices grown in higher altitudes with high yielding types of Kashmir Valley proper ; and

(*c*) study of the crosses at main station 5300′ and 2000′ sub-station.

4. Manurial Experiments, Repeating standardised manurial experiments done at other British Indian Rice Stations as suggested by the Rice Committee.

5. Study of a local disease of rice known as " Rai ", which plays havoc with the crop during certain seasons.

6. Find out the actual water requirements of rice of continuous irrigation under terraced cultivation.

7. Work out a small weeding implement which could be useful as a weeder and replace the tedious task of Koshaba, which is at present very costly and done by manual labour.

APPENDIX XXVI.

Note on Subject No. 14 (a) :—Rice Research—Extension Schemes— Bengal, beyond 1st April 1940 (Rs. 1,10,420 for 4 years).

A copy of the revised proposals for a further extension of the Rice Research Scheme, Bengal for a period of four years from April 1940 to March 1944, is attached for consideration (Annexure). The cost involved is Rs. 1,10,420 (*recurring*) of which the shares of the Imperial Council of Agricultural Research and the Bengal Government are as follows :—

Imperial Council of Agricultural Research Rs. 56,160 (Pay for senior research staff only).

Bengal Government Rs. 54,260 (rest of the expenditure).

Emergency cut of 15 per cent. has not been taken into consideration in fixing the share of the Imperial Council of Agricultural Research. The benefit of the cut, so long as it lasts, will actually accrue to the Imperial Council of Agricultural Research.

2. The original scheme of rice research for Bengal was sanctioned with effect from April 1932, at a gross cost of Rs. 1,56,322 spread over 5 years in co-operation with the late Empire Marketing Board, whose financial liabilities were later on taken over by His Majesty's Government, on a fifty-fifty basis. The first five year period expired in March 1937. An extension was granted for a further period of three years from April 1937 on condition that half the cost was met by the Provincial Government. This extension is due to expire in March 1940.

3. With regard to the future policy of the Rice Research, the Council has adopted the following principle :—

> " After 1939-40, the Imperial Council should *generally* limit its assistance for rice research to work on rice genetics, water requirements and manurial experiments, leaving rice breeding *to be tackled provincially. The Council's assistance should* mainly take the form of grants for senior research staff ".

4. The proposal is for the consideration of the Advisory Board. It will first be examined by the Standing Rice Committee whose report will be submitted to the Board in due course.

ANNEXURE.

REVISED PROPOSAL FOR EXTENSION OF THE RICE RESEARCH SCHEME, BENGAL, AT CHINSURA AND BANKURA TO THE IMPERIAL COUNCIL OF AGRICULTURAL RESEARCH, FOR A FURTHER PERIOD OF 4 YEARS ON THE BASIS THAT THE IMPERIAL COUNCIL OF AGRICULTURAL RESEARCH WILL BEAR THE COST OF PAY FOR THE SENIOR RESEARCH STAFF AND THE REST TO BE BORNE BY THE GOVERNMENT OF BENGAL.

CHINSURA.

Programme of Work.

1. *Isolation and Study of Pure Lines.*—The existing pure lines will be grown and studied in detail for further selection of types with special

reference to yield and quality. The classification of the pure lines will also be completed.*

2. *Yield Trials.*—Six yield trials are being conducted for the last few years and it is proposed to undertake the following two more from next season, namely, (1) preliminary late *aman* trial, and (2) preliminary scented paddy trial. It is necessary that all the yield trials should be continued for a number of years in order that we may be in a position to isolate new promising types from the pure lines culture and test their merits with regard to yield and quality under varying seasonal conditions.

It may be observed that the above yield trials have reference to the selection and evolution of the best strains so far as yield of grain is concerned and not the demonstration of the selected strains on the cultivators' field.

Advantage has been taken of Yates' " quasi-factorial designs " and two selection experiments with large number of paddy strains were conducted during the years 1937-38 and 1938-39. It is thus possible to find out with precision new promising types from the pure line cultures for inclusion in the varietal tests.

3. *Complex Cultural Experiment on Rice.*—In order to study the primary effects and interactions of date of planting, age of seedling and variety, a complex cultural experiment was started in the year 1936-37 and it will be continued for a few years more in order to study the effects under varying seasonal conditions.

The cultural side of rice cultivation in Bengal at least, is the most important factor on which depends the yield of grain. The complex cultural experiments which have fulfilled their purpose have already been discontinued.

4. *Irrigation Experiment.*—An irrigation experiment was started during the year 1938-39 and it will be continued for a number of years in order to study the effects of irrigation on the yield of rice. It was a two-fold experiment with two irrigation treatments and two varieties. There are already irrigation facilities in the canal systems of Damodar and Eden in the district of Burdwan. Some more canals are under the project of the Government for the districts of Hooghly, Howrah and Midnapur.

5. *Study of the Effects of Weeds on the Yield of Rice.*—With a view to study the effects of weeds on the yield of rice, an experiment was laid out during the year 1938-39. It is a simple experiment and there were only two treatments, namely, (*i*) weeding, and (*ii*) no weeding. It is necessary that the experiments should be continued for a number of years in order to study the effects under varying seasonal conditions. The particular weeds here are the charophytas (locally known as *jhanji*).

6. *Hybridisation and Genetical Study.*—With a view to evolve high yielding strains of rice that conform to trade requirements, the follow-

*The presentation of the data will be done according to standardised tables and schedules of the Imperial Council of Agricultural Research published in the *Indian Journal of Agricultural Research,* Volume VIII, Part V, October 1938.

ing yielding strains of rice that conform to trade requirements, the folowous types with special reference to quality and yield it is necessary that the work should be continued for a number of years :—

(1) Hatipanjra × Danaguri F_5.

(2) Latisail × Blue Rose F_4.

(3) Patnai 23 × Fortuna F_2.

(4) Patnai 23 × Hatipanjra F_2.

(5) Patnai 23 × C29/127 (Burma strain) F_1.

(6) Patnai 23 × D15 (Burma strain) F_1.

(7) Patnai 23 × A28/6 (Burma strain) F_1.

(8) Patnai 23 × R26/3 (Burma strain) F_1.

7. *Manurial Experiments.*—(*a*) Study of the primary effects and interactions of three levels of Nitrogen (N_0, N_1, N_2), three levels of P_2O_5 (P_0, P_1, P_2) and three varieties of rice (V_0, V_1, V_2).—The experiment has been started during the year 1939-40 and it will be continued for a number of years.

(*b*) Study of the effects of green manuring with *dhaincha*, sunn hemp and cowpea on the yield of rice.

BANKURA.

Programme of Work.

1. *Isolation and Study of Pure Lines.*—The existing pure lines will be grown and studied in detail for further selection of types with special reference to yield and quality. The classification of the pure lines will also be completed.*

2. *Yield Trials.*—Sixteen yield trials are being conducted at Bankura and Suri in 1939-40 and they will be continued during the extension period in order to test their merits with regard to yield and quality under varying seasonal conditions. The yield trials have reference to the selection and evolution of the best strains so far as yield of grain is concerned, and not the demonstration of the selected strains on the cultivators' field.

3. *Cultural Experiments.*—(*a*) In order to study the effects of different methods of sowing and transplanting on the yield of early maturing *aus* paddy, an experiment is being conducted with the following treatments, *viz.*, (1) transplanting 21 days old seedligs, (2) transplanting 28 days old seedlings, (3) broadcast sowing, and (4) dibbling. We propose to continue the experiment on a more elaborate scale, adding to it different dates of planting, and study their effects on the above treatments.

(*b*) A cultural experiment with two varieties, three levels of weeding and three levels of hoeing (inter-culture) has already been started during 1939-40. The soil being sandy sets very hard after transplanting

*The presentation of the data will be done according to standardised tables and schedules of the Imperial Council of Agricultural Research published in the *Indian Journal of Agricultural Research*, Volume VIII, Part V, October 1938.

when there is heavy rain and it is the general practice with cultivators of this part of West Bengal to use a small spade to turn up the soil after about six weeks of transplanting. It is also well known that weeding the paddy-field is a factor which influences the yield of paddy to a great extent. *It is essential to have data about the influence of these factors on* the yield. The experiment will be carried on during the extension period. The cultural side of rice cultivation in Bengal at least, is the most important factor on which depends the yield of grain. The complex cultural experiments which have fulfilled their purpose have already been discontinued.

4. *Irrigation Experiment.*—An irrigation experiment will be started in the year 1940-41 to study the water requirements of the recommended varieties and to find out the critical stages when watering is necessary. The *necessity of the experiment is urgent in this part of* West Bengal where rainfall is often deficient and freakish. Details of the experiment will be worked out when the scheme is approved.

It has been observed that there is no practice of irrigation at Bankura. It is, however, not a fact. From time immemorial irrigation is practised at Bankura and neighbouring districts on the western border of Bengal from *bunds* (stored reservoirs) and the local Government have passed a Bill for the reclamation and resuscitation of the irrigation *bunds so that the failure of crop can at least be partially guarded against.* There are also two projects of canal irrigation, one at Birbhum and the other at Bankura, under the consideration of the Government and preliminary survey works are being carried out. Under these circumstances experiments on water requirements of rice are of vital importance, and these must be undertaken ; so that we may be furnished with the data of the time irrigation schemes fructify.

There are facilities at Bankura Farm for conducting irrigation experiments *from two tanks, from one of which water can be lifted by pump,* and from the other, lands can be irrigated by gravitation.

5. *Hybridisation and Genetical Study.*—(*a*) The work is already in progress for a number of years. Latisail high yielding late variety was crossed with an American variety—Blue Rose—in the year 1934-35. Our future line of work in this investigation will be to select from among the fixed types of the progeny those that conform to trade requirements by their grain quality.

(*b*) New crosses of local paddies with other exotic varieties are *being arranged for.*

(*c*) Evolution *and selection of* draught resistant strains with good yield.—Some varieties of paddy show more resistance to draught than others and it is believed that this character is a heriditary one. It is therefore essential to know the behaviour of *our recommended* varieties under various conditions of moisture in the soils. This area often suffers from draught and we must find out varieties for all situations, specially the two upper ones which can grow under insufficient supply of water.

(6) *Manurial Experiments.*—A three-factor manurial experiment with two varieties, three levels of Nitrogen and three levels of Phosphoric Acid, has already been started during the year 1939-40. This experiment will be continued during the extension period.

Proposed expenditure for 4 years for the extension of the Rice Research Scheme in Bengal at Chinsura and Bankura from April 1940 to March 1944.

——	9th year.	10th year.	11th year.	12th year.
	Rs.	Rs.	Rs.	Rs.
IMPERIAL COUNCIL'S SHARE.				
Two Rice Research Officers at Rs.390—20—470*	9,720	10,200	10,680	11,160
Two Senior Research Assistants at Rs. 150† ..	3,600	3,600	3,600	3,600
Total ..	13,320	13,800	14,280	14,760
BENGAL GOVERNMENT'S SHARE.				
One Field Assistant at Rs. 50†	600	600	600	600
One Field Assistant at Rs. 71—83‡ ..	879	915	951	987
Two Fieldmen at Rs. 30†	720	720	720	720
Two peons at Rs. 13†	312	312	312	312
Travelling allowance	3,000	3,000	3,000	3,000
Seeds, plants, manures and implements .. } Chemicals and apparatus .. .. .. }	525	525	525	525
Contingencies	7,275	7,275	7,275	7,275
Books, maps and periodicals	200	200	200	200
Total ..	13,511	13,547	13,583	13,619
GRAND TOTAL ..	26,831	27,347	27,863	28,379
	Rs. 1,10,420.			

* Emergency cut of 15 per cent. has not been taken into consideration.

† No increment.

‡ Increment on 1st June

APPENDIX XXVII.

Note on Subject No. 14 (d) :—Continuance of the Research in deep water Paddy in Assam—Beyond 1st April, 1940.

As the Advisory Board are aware, the Government of Assam's proposals for extending the Deep Water Paddy Research at Habiganj for a further period of 4 years and nine months from the 1st April 1939 were examined at the meeting of the Board held in November 1938.

2. According to the Advisory Board's recommendation, during 1939-40, the Council is to provide the cost of the Botanical staff [which includes the Rice (Economic) Botanist, Botanical Assistant, Field Assistant, Fieldmen, and a clerk and a peon for the Economic Botanist] Rs. 500 for travelling allowance and a sum of Rs. 2,100 under contingencies, and during the next three years, the Council's assistance is to be limited to the cost of the Botanical staff and travelling allowance only (*vide* extracts enclosed—Annexure I). On this basis, the total cost of the extension recommended by the Board amounts to Rs. 36,272 spread over four years, *vide* statement attached (Annexure II). The Governing Body agreed in circulation to the extension of the scheme during 1939-40 on the basis of the Board's recommendation. The extension of the scheme for the remaining three years, *viz.*, 1940-41 to 1942-43 was considered by it at its meeting held in July 1939 and it was decided that as the current sanction of the scheme would expire on the 31st March 1940, when several other rice research schemes would also expire, all these schemes might be considered together at the next meeting of the Advisory Board before they were further extended and that no provision need be made for this scheme beyond 31st March 1940 at present. The subject is, therefore, for reconsideration by the Board along with other extension schemes which are before the Board separately.

3. During these three years (1940-41 to 1942-43) the Council's assistance, according to the previous recommendation of the Board, will be limited to the cost of the Botanical staff and travelling allowance only, amounting to Rs. 26,214 (Annexure II). This substantially follows the principle laid down by the Governing Body in regard to future extension of rice research schemes, *viz.* :—

> After 1939-40, the Imperial Council should *generally* limit its assistance for rice research to work on rice genetics, water requirements and manurial experiments, leaving rice-breeding to be tackled provincially. The Council's assistance should mainly take the form of grants for senior research staff.

4. The Provincial Government have asked for an increase in the provision under travelling allowance (Rs. 500 p. a.), in view of the fact that on a recommendation made by the Advisory Board in November 1938, the Rice Botanist has to attend the meetings of the Rice Committee. If this is accepted, it is suggested that the provision may be increased by, say Rs. 1,000 for the three years making the total contribution from the Imperial Council of Agricultural Research Rs. 27,214 for three years.

5. The Assam Government have been requested to send the detailed technical programme for the extension period. This will be placed before the Board if received in time. [Added (Annexure IV).]

6. The Scheme will first be examined by the Rice Committee whose report will be submitted to the Board in due course.

ANNEXURE I.

APPLICATION FROM THE GOVERNMENT OF ASSAM FOR A GRANT OF Rs. 94,200 SPREAD OVER 4 YEARS 9 MONTHS FOR THE CONTINUANCE OF RESEARCH IN DEEP WATER PADDY IN ASSAM. (SUBJECT No. 15 OF THE AGENDA OF THE ADVISORY BOARD.)

Extract from the Report of the Rice Research Sub-Committee, dated 22nd November 1938.

* * * * * * *

The Committee agreed to recommend extension and stipulated that :—

(1) The Local Government should supply a control tank,

(2) The work should be better reported, and

(3) The Rice Botanist should attend the meetings to explain the method of work.

The Chairman asked the views of the Committee regarding the contribution for 1939-40 as after March 1940 all the schemes according to the decision of the Governing Body would have to be financed to a less degree and provision would have to be mainly made for the scientific staff. For 1939-40, the Committee agreed to provide the cost of the botanical staff and in addition a reasonable share (Rs. 2,100 for items under contingencies) of the cost of running the farm and after 1940 to limit the assistance to the staff. The renewal was recommended on this new basis for three years after 1939-40.

* * * * * * *

Extracts from the proceedings of the Advisory Board meeting held on the 25th November 1938.

* * * * * * *

Dr. Mitra said that this would rather put him in an awkward position to find money in 1939-40 unless a supplementary budget was submitted to his Government. He therefore requested that the money be provided by the Council if necessary from the savings of about Rs. 4,500.

The Chairman said that there was a strong feeling in Committee that the Council should not pay for the ordinary Farm Manager, Assistant Farm Manager, Field Assistants and for recurring expenses of a whole farm of 85 acres of which only 10 acres were devoted to rice research, the rest being devoted to minor experiments, seed multiplication, etc. The budget

fficulty was usually got over by a supplementary grant in provinces and might not be impossible for Assam to make a supplementary grant.

The report of the Sub-Committee was adopted.

* * * * * * *

ANNEXURE II.

ASSAM RICE RESEARCH SCHEME—EXTENSION FROM 1ST APRIL 1939.

Grant recommended by the Advisory Board (November 1938).

	1939-40.	1940-41.	1941-42.	1942-43.
	Rs.	Rs.	Rs.	Rs.
Botanical Staff.				
Rice Botanist	3,952	4,192	4,432	4,672
Botanical Assistant	1,322	1,370	1,418	1,466
Field Assistant	665	695	725	759
Fieldmen (2)	787	800	883	946
Clerk for Rice Botanist	576	594	624	642
Peon for Rice Botanist	156	160	169	168
Total Botanical Staff	7,458	7,811	8,250	8,653
Travelling allowance	500	500	500	500
Contingencies	2,100	..	..	..
Total ..	10,058	8,311	8,750	9,153
Total for four years 1939-43 ..	Rs. 36,272			
Total for three years 1940-43 ..		Rs. 26,214		

Additional details for years 1940-43.

	Total.	Share of I. C. A. R.	Share of Provincial Government.
	Rs.	Rs.	Rs.
Estimates as proposed by Provincial Government ..	61,200*	58,200	3,000
As proposed by A. B. November 1938	„	26,200 (round)	35,000

* *Vide* Annexure III.

ANNEXURE III.

ESTIMATE OF EXPENDITURE FOR THE CONTINUATION OF THE RESEARCH WORK AT THE DEEP WATER PADDY RESEARCH FARM AT HABIGANJ FOR THREE YEARS FROM THE 1ST APRIL 1940 UP TO THE 31ST MARCH 1943.

Details.	1940-41.			1941-42.			1942-43.		
1	2			3			4		
	Rs.			Rs.			Rs.		
	Rs.	A.	P.	Rs.	A.	P.	Rs.	A.	P.
To be paid by the Imperial Council of Agricultural Research.									
Recurring.									
***Pay** of Officer.*—Economic Botanist (one at Rs. 250—260—280—20—420).	4,192	0	0	4,432	0	0	4,672	0	0
***Pay** of Establishment.*—									
Farm Manager (one at Rs. 80—90—100—4—140—6—200).	1,263	8	0	1,311	7	0	1,359	7	0
Assistant Farm Manager (one at Rs. 60—6—120).	959	3	0	1,031	3	0	1,103	3	0
Botanical Assistant (one at Rs. 80—90—100—4—140—6—200).	1,369	8	0	1,417	8	0	1,465	9	0
Field Assistant (one at Rs. 50—2½—100) ..	694	11	0	724	11	0	758	11	0
Fieldmen (2 at Rs. 20—25—30—4/2—50) ..	799	12	0	882	12	0	845	12	0
Clerk for Economic Botanist (one at Rs. 40—4/2—60).	594	2	0	624	0	0	642	0	0
Farm clerk (one at Rs. 35—35—40—4/2—60)	492	0	0	528	0	0	540	0	0
Allowance to Sub-Assistant Surgeon at Rs. 10 p. m.	120	0	0	120	0	0	120	0	0
Farm Peon(one at Rs. 12—1/3—16—1/5—17)	192	0	0	192	0	0	198	1	0
Peon to Economic Botanist (one at Rs. 12—⅓—16—1/5—17).	159	11	0	168	0	0	168	0	0
Total ..	10,836	7	0	11,431	7	0	11,872	14	0
II.—*Allowance and Honoraria.*—									
Travelling allowance of officer—Economic Botanist. Do. Establishment ..	500	0	0	500	0	0	500	0	0
III.—*Contingencies.*—									
Wages of labourers	3,500	0	0	3,500	0	0	3,500	0	0
Seeds, plants, etc.	100	0	0	100	0	0	100	0	0
Purchase of cattle	*Nil*			*Nil*			*Nil*		
Feed of cattle	1,500	0	0	1,500	0	0	1,500	0	0
Miscellaneous (Purchase of medicine and country medicine, purchase and repair of furniture, service stamps, chemicals, liveries, typewriter, cycles, etc.).	1,100	0	0	1,100	0	0	1,100	0	0
Contingency—from menials (Farm Chowkidar one at Rs. 12—1/3—16—1/5—17— and Sweeper one at Rs. 17 p. m.).	350	0	0	350	0	0	350	0	0
Purchase of map, books, etc.	150	0	0	150	0	0	150	0	0
Rent of land	615	0	0	615	0	0	615	0	0
Total ..	7,315	0	0	7,315	0	0	7,315	0	0

ANNEXURE III—*contd.*

Details.	1940-41.	1941-42.	1942-43.
1	2	3	4
	Rs. A. P.	Rs. A. P.	Rs. A. P.
Non-recurring.			
IV.—*Reclamation*	*Nil*	*Nil*	*Nil*
Fencing Tanks	"	"	"
Threshing floor Manure pit, etc.	"	"	"
Implements (including boats, etc.) Laboratory and Office fittings	200 0 0	200 0 0	200 0 0
Total	200 0 0	200 0 0	200 0 0
V.—*N. Works—Miscellaneous*—			
Surevyors' allowance Boundary pillars Preparation of rough plan of the farm	*Nil*	*Nil*	*Nil*
Buildings—			
Office and Laboratory Godown Granary Open Barn Cattle Shed	*Nil*	*Nil*	*Nil*
Total of V	*Nil*	*Nil*	*Nil*
Total of IV	200 0 0	200 0 0	200 0 0
Total of III	7,315 0 0	7,315 0 0	7,315 0 0
Tota lof II	500 0 0	500 0 0	500 0 0
Total of I	10,836 7 0	11,431 7 0	11,872 11 0
Total of Imperial Council of Agricultural Research's contribution.	18,851 7 0	19,446 7 0	19,887 11 0

ANNEXURE III—*concld.*

Details.	1940-41.	1941-42.	1942-43.	
1	2	3	4	
	Rs. a. p.	Rs. a. p.	1942-43	
To be paid by the Local Government.				
VI.—Cost of land—				
Buildings—				
Quarters for the—				
Economic Botanist ..				
Farm Manager ..				
Botanical Assistant ..				
Assistant Farm Manager				
Botanical Field Assistant	*Nil*	*Nil*	*Nil*	
2 Clerks				
4 Fieldmen				
3 Menials				
Coolies shed				
Total ..	*Nil*	*Nil*	*Nil*	
VII.—				
Purchase of furniture ..	*Nil*	*Nil*	*Nil*	
Petty Repairs to buildings..	1,000 0 0	1,000 0 0	1,000 0 0	
Conveyance allowance ..	*Nil*	*Nil*	*Nil*	
House-rent allowance ..				
Totla of VII ..	*1,000 0 0*	*1,000 0 0*	*1,000 0 0*	
Total of VI ..	*Nil*	*Nil*	*Nil*	
				Total.
				Rs. a. p.
Total of *Local Government's contribution.*	*1,000 0 0*	*1,000 0 0*	*1,000 0 0*	**3,000 0 0**
Total of Imperial Council of *Agricultural Research's contribution.*	18,851 7 0	19,446 7 0	19,887 11 0	**58,185 9 0** *or* **58,200 0 0 (round)**
Grand Total ..	**19,851 7 0**	**20,446 7 0**	**20,887 11 0**	**61,185 9 0 or 61,200 0 0 (round).**

ANNEXURE IV.

Programme of work for the proposed extension of the Assam Rice Research Scheme.

I *Botanical* :

1. The isolation of pure lines which are in progress (at different stages depending on the year of collection) will be completed. (The work on *boro* is almost complete while in *aman* due to the difficulties in working on the crop a few more years will be required.)

2. The cataloguing and description of characters will be taken up on the lines recommended by the Rice Sub-Committee. (The work has recently been taken in hand. Due to the large number of quantitative measurements and statistical computations required coupled with the reduction in staff, the work is being planned to complete the descriptions in about three years.)

3. Growth studies on the *aman* crop for assessing water response will be continued on the same lines as before. Some types will be intensively studied from the seasonal point of view to clarify the relation between plant growth and water rise particularly as flood water rises very considerably from year to year.

All pure lines will be studied for water response under field conditions during critical periods of abrupt water rise.

4. Submergence studies in *aman* will be continued to elaborate further the relation between age and variety with water response and yield, with particular reference to different periods and depth of submersion.

Attempts will be made to statistically interpret the results with special reference to factors as survival percentage, tillering, ear length, number of grains per ear and yield.

A varietal replicated submersion experiment for comparing promising strains will be carried out if practicable.

5. Histological studies of stem structure during different periods of growth will be continued. The relationship between area of air passages with water response will be fully explored, particularly attention being paid to their conditions of development. (Due to the time absorbing nature of this work it will be spread over the period of extension).

6. Hybridization studies will be continued in *boro* evolving a fine grained *boro* by combining the hardiness of the *boro* (Spring Paddy) with the fine grain of the *aus* (Summer Paddy).

7. The inheritance of quantitative characters such as grain size will be continued. Studies on linkage relationships will be carried out as far as practicable.

8. Varietal trials of promising strains will be continued, Special emphasis will be given in *aman* types combining high yield and water response. In *boro* attempts will be made to select comparatively drought resistant types. Special attention will be laid on evolving an early type.

9. Developmental studies in *boro* with reference to tillering and time of transplanting

II. *Cultural* :

1. Cultural experiments in *aman* will be continued on the same lines as before. The seasonal relation between sowing date, the arrival of the flood and yield will be continued.

The experiments on the effect of seed rates, dry and wet sowing will be continued to find out their relationship with the time of transplanting and yield.

2. Experiments on the effect of winter ploughing in *aman* will be investigated together with the optimum number of ploughing necessary.

3. In *boro* the relation between time of sewing and transplanting date will be studied with particular reference to the rainfall in February and March.

The effect of weeding and other factors will also be studied.

4. The possibility of utilizing water hyacinth as a green manure in *boro*.

III. *Hulling and Cooking Tests* of some selected types will be taken up.

APPENDIX XXVIII.

Note on Subject No. 15 (a) (i) :—Application from the Government of the Punjab for a grant of Rs. 11,070 spread over a period of five years for a scheme for investigating problems of quality in the fine rices of the Punjab.

A letter from the Government of the Punjab forwarding a revised scheme for investigating problems of quality in the fine rices of the Punjab is appended (Annexure). The proposal involves the following expenditure :—

	Rs.
Recurring for five years (*to be met by the Imperial Council of Agricultural Research*) ..	11,070
Non-recurring (*to be met by the Punjab Government*)	2,500

Besides erecting and equipping the laboratory, the Punjab Government will also provide all labour and other expenses connected with the growing of the various samples for experimental purposes.

2. It may be recalled that the Government of the Punjab submitted a scheme on this subject at the first meeting of the Rice Committee held in January 1937. It was, however, referred back for revision on certain lines (*cf.* pages 19, 30, 77 to 78 of the proceedings of the first meeting of the Committee) and the present scheme is the outcome of the recommendation made by this Committee and the Advisory Board in 1937.

3. The work done by the Council on " Quality in rice " is briefly as follows :—

Work on ' quality ' was initiated in December 1934 at the Indian Institute of Science, Bangalore, and a supplementary scheme was sanctioned for being conducted at Coimbatore. The latter work was terminated in 1937. In pursuance of Sir John Russell's recommendations with regard to ' quality ' problems being undertaken by the Council (*cf.* pages 8, 23, 79, 161, 169. 195-196 and 216 of Report), *liaison* was established with the Nutrition Research Authorities at Coonoor, while extending the Bangalore part of the scheme till the 30th May 1939. The results have not been found satisfactory and this scheme also has been terminated by the Council. A scheme put up by Dr. K. P. Basu of the Dacca University on a similar problem was at first approved by the Governing Body but was dropped subsequently owing to paucity of funds.

4. The scheme is for the consideration of the Advisory Board. It will first be examined by Rice Committee whose report will be submitted to the Advisory Board in due course.

ANNEXURE.

COPY OF LETTER No. 2241-D. (S.), DATED THE 21ST SEPTEMBER 1938, FROM THE JOINT SECRETARY TO GOVERNMENT, PUNJAB, DEVELOPMENT DEPARTMENT, TO THE SECRETARY, IMPERIAL COUNCIL OF AGRICULTUAL RESEARCH.

In continuation of my letter* No. 2245-D., dated the 20th May 1938, with which was forwarded, for the information of the Council, a copy of

*Not printed.

letter* No. 353|63-1151 (a), dated the 11th May 1938, and enclosures from the Director of Agriculture, Punjab, containing his observations on the recommendations made by the Rice Committee, I am directed to invite a reference to item 9 of the recommendations from which it will be observed that the Committee *considered the Punjab scheme cited as subject to be too* indefinite and suggested that a new scheme which would—

(1) take into account the considerable work already done on the subject in India, and

(2) be *more definite as regards the investigation actually planned,* should be put up. It was also stated therein that Mr. Jenkins *suggested that other Provincial Governments interested in* the subject might be consulted.

2. With regard to (1) it may be stated that the Coimbatore scheme has been examined with a view to find out whether the results obtained furnished the information for the collection of which the Punjab scheme was submitted. The main problems dealt with in the Coimbatore scheme are the Micro-Chemical studies on the formation of starch and proteins in rice grain and study of Histology of the rice grain regarding colour of rice and aleurone layers. These studies will not form part of the Punjab scheme. A side problem dealing with aeration of stored rice and its effect on cooking quality of South Indian rices has also been touched, but here in the Punjab scheme the effect of storage on cooking quality of Fine Rices is to be studied exhaustively. It has been explained in the revised scheme, forwarded herewith (Enclosure), how the work on the Punjab scheme will differ materially from that under the Coimbatore scheme.

3. *So far as Mr. Jenkins' suggestion mentioned in paragraph 1* is concerned, the Assistant to the Cerealist who attended the first meeting of the Rice Committee as a visitor reports that Mr. Jenkins merely made a general suggestion and did not indicate the points on which consultation with other Provincial Governments was considered necessary. Mr. Jenkins is not in India at present and it is not possible to ascertain what his intentions in this matter were. In any case the revised scheme has been so prepared as to avoid any risk of duplication of work. I am therefore to request that it may kindly be placed for consideration by the Standing Committee on Rice at their next meeting.

4. As already mentioned in Mr. Bourne's letter* No. 3960-D., dated the 1st December 1936, the Punjab Government are prepared to bear the non-recurring expenditure of Rs. 2,500. They consider that the revised recurring cost, *viz.*, Rs. 11,070 spread over a period of 5 years, should be met by the Imperial Council of Agricultural Research.

ENCLOSURE.

REVISED SCHEME FOR INVESTIGATING PROBLEMS OF QUALITY IN THE FINE RICES OF THE PUNJAB.

The Punjab produces many varieties of fine quality rice. Large quantities are exported through the local rice markets to big cities like Delhi, Peshawar, Karachi, Bombay, Bangalore, Hyderabad Deccan and Calcutta under various trade names such as Amritsari, Dehradun, Delhi and Peshawari. Length of the grain and aroma are important factors *in judging* quality. Prices vary from Rs. 2 to Rs. 5 per maund, and

*Not printed.

indeed some varieties fetch as much as Rs. 10 per maund according to quality.

2. High prices offer inducement to growers to produce as big quantities of quality rices as they can under prevailing local conditions. Climate, nature of soil, kind and quantity of water used for irrigating the crop, time of sowing and harvesting, methods of drying and milling the paddy and of grading and storing cleaned rice, and the age of stored rice are all factors which affect quality, therefore the market price. All these factors require a detailed scientific study with a view to exploit the results of reseach in improving quality, in obtaining better yields and extending the area under more paying varieties. Further the food value and cooking qualities of different varieties require investigation from the physico-chemical standpoint.

3. The area commanded by the Upper Chenab Canal in the districts of Sheikhupura, Gujranwala and Sialkot is the centre of production of finer varieties. Altogether an area of a quarter of million acres is under rice of which about 50 per cent grows the finer varieties. The Punjab Agricultural Department maintains a large Rice Breeding and Experimental Station at Kala Shah Kaku, eleven miles from Lahore on the Grand Trunk Road to Rawalpindi.

4. It is suggested that the Imperial Council of Agricultural Research may be approached to make a grant from its funds for research purposes. Some work has already been done and is being done on quality rice at the Indian Institute of Science, Bangalore, and this research is financed by the Imperial Council of Agricultural Research. This work however is different from that which is proposed to be undertaken in the Punjab. "Cooking quality" as appreciated in southern India for whose requirements the Bangalore research has to cater largely is different from that in Northern India. For instance, in Southern India qualities are assessed on the degree of all round swelling that the grain achieves in cooking, whereas in Northern India greater emphasis is laid on elongation in the process of cooking and aroma. Rice is the chief staple of south Indian dietary of all classes ; while in the north it is a luxury for the more well to do classes. In the south the grain is stored in the form of a paddy, while in the north finer varieties are stored after husking and cleaning. Naturally the experiments at Bangalore are designed to determine the effect of storage on paddy, the latter being husked only just before use, whereas in the proposed Punjab scheme more emphasis will be laid on the effect of storing on husked and cleaned rices of finer qualities. Probably owing to climatic conditions southern India cannot grow very fine varieties of rice. Perhaps the fact that the rivers in northern India are snow-fed and those in southern India are not, has an important bearing on this point. Research on the quality rices in northern India should yield valuable results which are not obtainable from the work being done at Bangalore.

5. The Physico-chemical Assistant proposed for the Scheme will work at Kala Shah Kaku, but would have to pay frequent visits to Lahore for consultation with the science staff of the Punjab University and of the Irrigation Research Institute, Lahore, working on physico-chemical problems. He shall have first to explore whether by any physico-chemical determinations, such as percentage of fat, PH value, titrable acidity, maltose, protein, solubility, viscosity, condition of starch aggregation, etc., it is possible to assess rapidly and expeditiously the quality of a sample in

the sense as understood in the Punjab. He shall then have to standardise his methods. Some work on these lines was done at the Irrigation Research Institute, Lahore by a post graduate student for his M.Sc. degree, which work can be made the starting point for work connected with the proposed Schemes. The Physico-chemical Assistant shall also have to carry out actual cooking tests in the laboratory, in which he would avail, if necessary, of the methods standardised at Bangalore and Coimbatore in this direction. Outlines of work in connection with the obtaining of samples for this Scheme would be something as follows :—

1. Growing of fine varieties of rice under uniform conditions.
2. Growing of one or two fine varieties on different types of soils, but with other conditions being the same.
3. Growing of one or two fine varieties in different localities with well defined differences in rainfall, altitude, etc.
4. Growing of one or two fine varieties with different sources of irrigation, such as canal water, well water, rainy-stream water, etc., and with varying frequencies of Irrigations.
5. Growing of one or two fine varieties with different manurial treatments such as farmyard manure, artificial nitrogenous and phosphatic fertilizers, and green manures.
6. Growing of one or two fine varieties, by planting on different dates, extending over a period of three months covering both the hot and rainy seasons.
7. Storing of samples in various ways and for different lengths of time, in order also to study the effect of this factor on quality.

6. The estimated expenditure on the proposed Punjab scheme spread over a period of five years is as follows :—

(Non-recurring).

	Rs.
A small laboratory with fittings at the Rice Farm, Kala Shah Kaku	2,500
(Recurring).	
(1) One Physico-Chemical Assistant at Rs. 80—7—150/7—187—8—225 *plus* Rs. 14 advance increments if an M.Sc. is recruited ..	6,500
(2) One Laboratory Attendant at Rs. 21—1—30 ..	1,320
(3) Travelling Allowance at Rs. 250 per annum ..	1,250
(4) Contingencies, including laboratory requirements, at Rs. 400 per year	2,000
Total ..	11,070

It is proposed that the Punjab Government should bear the non-recurring charges and that the total recurring cost, *viz.*, Rs. 11,070 should be met by the Imperial Council of Agricultural Research. Apart from meeting the cost of erecting and equipping the laboratory, the Punjab Government will also provide all labour and other expenses connected with the growing of the various samples which will be required during investigation.

APPENDIX XXIX.

Note on Subject No. 15 (a) (ii) :—Note by the Rice Specialist, Sabour—Investigations of the factors which govern quality in fine rices and the possibility of growing such rices in tracts other than those to which they originally belong without any deterioration in their quality.

A note by the Rice Specialist, Bihar, on the above mentioned subject is appended (Annexure I). It will be recalled that the note was placed before the Rice Committee at the second meeting held in March 1938, and it was then proposed to rediscuss the matter at a following meeting when the author of the note might be present. (*Cf.* pages 42, 128, 274 to 276 of the proceedings of the Advisory Board Meeting, March 1938.) Relevant extracts are enclosed (Annexure II).

2. It will also be recalled that on a recommendation of the Rice Committee, a questionnaire on the need for an investigation into the heritability of aroma and flavour in rice was issued to the provinces and States and the replies received were circulated to the Committee with this office letter No. F. 114 (7)-37-A., dated the 4th June 1938.

3. A scheme from the Punjab Government on the subject is also before the Board separately.

4. The subject will first be considered by the Rice Committee whose report will be submitted to the Advisory Board in due course.

ANNEXURE I.

COPY OF NOTE BY THE RICE SPECIALIST, BIHAR.

Before dealing with the actual problem, it is essential to indicate briefly its economic aspect as ordinarily one is apt to think that the problem is of importance to only the higher and wealthier classes of men, who use these fine rices in making the delicious Indian dish " Pulao ", but actually this is not so as even the poorest cultivator is anxious to set aside, at least, a portion of his land for growing these rices, which bring him much higher price with very little extra care. These fine rices actually fetch a high premium varying from 50 to 100 per cent., *i.e.*, if the ordinary rices sell at Rs. 3-4-0 per maund, the fine varieties easily sell at Rs. 5-6-0 per maund in local markets, whereas when exported to other centres, they are sure to fetch still higher prices. When the problem is viewed from this angle that one can see its real importance even to ordinary cultivators who grow them, more or less, as a cash crop. The problem is thus of great importance to all classes of men—the wealthier one being interested in the eating of it, whereas the poorer class look forward to the cash money that it brings forth.

The problem of quality in fine ' Pulao ' rices has not so far been tackled in any part of India. As a matter of course no one has been able to say as to what really determines the so-called ' Quality ' of the reputed fine rices, which fetch so high a premium over the ordinary rices. The fineness of the grain alone is certainly not responsible for this as in each tract we come across a large number of ordinary fine varieties, but they do not fetch the same prices as some of the reputed fine varieties like Basmati, Hansraj, among U. P. rices or Shamzira, Tulsimanjri, Badshabhog, etc.,

among the Bihar rices. Another characteristic of the reputed fine rices is its 'aroma' or flavour, which does count a good deal in determining its quality, but then the question arises as to what constitutes this 'aroma' or flavour and whether such rices differ in their physical properties like water absorbing capacity, etc., or chemical constituents such as protein or fat percentage, etc., or not. There are still other characteristics of these fine rices such as aging, milling, and cooking quality, etc., which need careful investigation. The varieties with best cooking quality do not allow the cooked grains to form a mass, but even after cooking each individual grain keeps its identity—though elongating considerably and at times changing its shape.

The reputed fine rices are believed to be capable of retaining these 'Qualities' only in certain restricted areas and there is a general belief that the same fine varieties when grown in localities even a few miles away from those which they originally belong, they not only lose their cooking quality, but also get coarser and look different. It is this aspect of the problem which needs very careful investigation as it has, more or less, shut out the possibility of growing these reputed fine rices in tracts other than those to which they originally belong or even to extend its area in the same tract. Some preliminary investigations carried out under Bihar Rice Research Scheme have more or less established that these reputed fine rices could successfully be grown in absolutely new tracts without any change in their physical properties like size, shape, etc. A complete study of the problem, however, needs a co-ordinated investigation, with special staff deputed to this line of work alone, to be carried out in 2 or 3 adjacent provinces, where different varieties of these fine rices are grown. As the Punjab and United Provinces grow some of the most reputed and best varieties of fine rices, they must supply the material for the investigations and one or two other provinces such as Bihar and Central Provinces should actually grow those fine rices at a number of stations with diverse soil and climatic conditions.

The best known varieties of fine rices from each of the above tracts should first be selected for the purposes of this study and each of them should be grown at 2 or 3 centres in other provinces where they are not ordinarily grown ; whereas the home province should grow the samples in their natural habitat. The produce of each station should then be studied on the lines indicated in the schedule below :—

Item I. *Physical properties.*—

(1) Size and shape of husked grains (*i.e.*, rice).

(2) Water absorbing capacity (ordinary water) and increase in size.

(3) Presence of any aroma or flavour.

Item II. *Chemical properties.*—

(1) Analysis for ordinary constituents like carbohydrate, protein, fat, etc.

(2) Analysis for the presence of volatile oils or esters, etc.

Item III. *Milling Quality.*—

(1) Percentage of husks to grain.

(2) Percentage of broken grains.

Item IV. *Cooking Quality.*—

(1) Water absorbing capacity (boiled water).

(2) Increase in size by simple boiling.

(3) Change in shape, form, etc., if any.

(4) Actual cooking of (*a*) ordinarily table rice, and (*b*) 'pulao'.

(5) Fat or 'Ghee' absorbing capacity in cooking 'Pulao'.

The samples grown at each centre should be mutually exchanged for comparison with those grown in its original habitat and a part of the produce of each sample should be hulled and stored from year to year so as to watch the effect of aging on the 'Quality' of these rices. The stored rice samples shall have to be subjected to all the tests under items I, II and IV so as to see the effect of aging on all these characteristics. After this study has been carried out for, at least, 5 years, each province shall have sufficient data to co-ordinate the results arrived at different stations and to draw conclusions therefrom.

Besides these studies, effects of different manures and irrigation water (its nature and quantity) used for the crop on the quality of fineness of these rices may also be investigated.

In so far as inheritance studies are concerned, this need be carried out at only one or two stations. As the province of Bihar and Central Provinces have no reputed fine 'Pulao' varieties of their own, the inheritance studies, which are likely to open out new possibilities of growing these fine varieties, should primarily be carried out in these provinces and the botanical assistant required for the general studies on quality of fineness shall also carry out the inheritance study, which should cover the following aspects :—

(1) Inheritance of 'aroma' or flavour.

(2) Inheritance of grain size, *i.e.*, its fineness.

(3) 'Yield' in association with the above qualities.

When the study of the crosses has progressed to F_3 generation, it may be necessary to have a fieldman for helping the Assistant in taking field observation on individual plants, which is sure to take much time and require more hands.

As regards the staff and funds required for these investigations, it is suggested that the Rice Research Officers concerned should mutually discuss and then draw up the details regarding the same, but the total cost of carrying out these investigations is not expected to exceed Rs. 3,000 per annum for each province.

ANNEXURE II.

INVESTIGATIONS OF THE FACTORS WHICH GOVERN QUALITY IN FINE RICES AND THE POSSIBILITY OF GROWING SUCH RICES IN TRACTS OTHER THAN THOSE TO WHICH THEY ORIGINALLY BELONG WITHOUT ANY DETERIORATION IN THEIR QUALITY [ITEM 8 (*b*) OF THE AGENDA].

Extracts from the Report of the Rice Research Sub-Committee, 4th March, 1938.

Members of the sub-committee recorded their varying experiences as to the permanence of aroma in rices grown out of their ordinary habitat. It was not considered that the note required any immediate action.

Extracts from the proceedings of the Rice Committee Meeting, 5th March, 1938.

Dr. Burns said that this was really an effort to obtain opinion in favour of what would probably afterwards be put up as a scheme to study the permanence of aroma in rices grown outside their own natural habitat. The sub-committee had recorded the opinion of several people. In certain cases these rices tried in other areas had maintained their scent. No further action was at present required.

The Hon'ble Mr. Hossain Imam differed from the finding of the sub-committee and said that this was one of the ways in which the income of the cultivator should be increased. The cultivation of such rices might be encouraged by local Governments and the Council should do the co-ordination work only while not spending any money on field experiments. The Chairman promised that the note would be discussed again in the Rice Committee at its next meeting when the author of the note might be present.

* * * * * * *

Extracts from the proceedings of the Advisory Board, 12th March, 1938.

The recommendation of the Rice Committee was accepted.

* * * * * * *

COPY OF A FURTHER NOTE RECEIVED FROM THE RICE SPECIALIST, SABOUR.

PROBLEM OF 'QUALITY' IN FINE RICES.

Desirability of a Co-ordinated Research to investigate the problem fully and thereby open out the possibility of growing the reputed fine 'Pulao' rices of certain specific tracts in others as well.

In this connection, it is necessary to refer to an earlier note (Appendix I) submitted at the occasion of the last meeting of the Standing Rice Committee held in March 1938, where the problem has been dealt with in some detail and lines of investigations necessary are fully indicated and the subject is now introduced with a definite proposal to set up a scheme of co-ordinated research to investigate the problem fully. It is suggested that the reputed long-fine 'Pulao' rices of United Provinces and Peshawar and short fine rices of Bihar, Bengal and Central Provinces should be taken up for detailed study of the problem and the officers responsible for Rice Research in these provinces should meet as early as possible and draw up a definite scheme giving details of staff and equipment necessary for such co-ordinated research. As the provinces of Punjab is also interested in the growing of the long-fine 'Pulao' rices, of which there are any number of varieties in that province, it may also take part in such an investigation.

A co-ordinated research like this would naturally necessitate frequent meeting of the various officers responsible for investigations in their own province and discussing the results obtained from time to time. It is, therefore, suggested that such discussions should be held bi-annually at the occasion of Rice Research Sub-Committee meetings, when most of the Rice

Research Officers collect at one place. At these meetings, the Officers concerned shall not only chalk out a detailed programme of work for such co-ordinate research, but shall also watch the progress from time to time and suggest any additions and alterations in the original programme. Besides this, it shall also be necessary for the actual investigators, to visit tracts other than their own, where these rices are normally grown and study the soil and other agricultural conditions of those tracts fully and then try to grow them under similar conditions in their own province.

APPENDIX XXX.

Note on Subject No. 15 (b) :—Scheme from the Government of Madras for a study of the rice-growing conditions and the botanical and chemical work on rice in more advanced countries. (Rs. 3,500 for six months).

At its first meeting held in January, 1937, the Rice Committee considered a note from the Government of Madras on the need for a study of the rice-growing conditions and the botanical and chemical work on rice in more advanced countries and recommended that " the matter could be better considered if a definite scheme was put before the Imperial Council of Agricultural Research ". (Reference pages 19, 30 and 80 to 83 of the proceedings of the first meeting of the committee). The provincial government have now submitted the attached scheme (Annexure) based on that recommendation. The proposal is that the Paddy Specialist to the Government of Madras should be deputed to certain foreign countries for a period of six months to study cultivation methods, discuss them with rice workers and others and that for this purpose, the Council should meet his travelling allowance and subsistence charges amounting to Rs. 3,500. The provincial government will meet the pay of the officer, *viz.*, Rs. 3,600 besides leave and pension contribution.

2. The scheme will first be examined by the Rice Committee whose report will be submitted to the Board in due course.

ANNEXURE.

COPY OF LETTER No. 20181-III/38-6, DATED THE 10TH DECEMBER 1938, FROM THE SECRETARY TO THE GOVERNMENT OF MADRAS, DEVELOPMENT DEPARTMENT, TO THE SECRETARY, IMPERIAL COUNCIL OF AGRICULTURAL RESEARCH.

Rice Committee—Recommendations—Scheme on the need for a study of rice-growing conditions—Ref. your letter No. F. 114 (4)/37-A., dated 4-5th November 1937.

I am directed to forward a scheme (Enclosure) for the consideration of the Imperial Council of Agricultural Research on the need for a study of the rice-growing conditions and the botanical and chemical work on rice in more advanced countries. Under this scheme it is proposed to depute an Agricultural Officer of the Madras Government to countries like Japan, Phillipines, China, Java, Malaya, etc., to make a special study of the rice cultivation and crop improvement based on modern methods followed in those countries. The total estimated cost of the deputation is Rs. 7,100 of which a sum of Rs. 3,600 represents the salary of the officer to be deputed, for six months and the balance the travelling expenses and the subsistence charges of the officer. The Government of Madras are prepared to meet the salary of the officer in full, *viz.*, Rs. 3,600 (besides the usual leave and pensionary charges of the officer) if the Council will bear the balance of expenditure amounting in all to Rs. 3,500. I am to request you to obtain and communicate to this Government the approval of the Council to the scheme. The Provincial Research Council by a majority, supports the scheme.

ENCLOSURE.

Scheme for a study of the rice growing conditions and the botanical and chemical work on rice in more advanced countries.

Rice is the most important staple crop of India. The area occupied by this crop is more extensive in the Provinces of Bengal, Bihar, Madras, Assam and Orissa than in other Provinces. Almost all the quantity of rice produced in India is consumed in the respective Provinces and States. In spite of the enormous area under rice, nearly 30 per cent. of the cultivable area in British India—the production is not enough for the requirements of the country. There is always a certain amount of import which quantity fluctuates according to the local production being normal, below or above normal. In the interest of the country, it is necessary to increase the production of rice at least up to the level of meeting its normal requirements. The increase in production can be brought about either by increasing the area under the crop, or by increasing the outturn from the present rice areas by intensive methods of cultivation. The Crop Planning Conference which met in 1934 decided that the present world conditions in the matter of rice production should be borne in mind by the Provincial Governments which might be contemplating an increase in the present area. The world position with regard to rice which became unfavourable some years back, does not yet show signs of improvement. Any idea of increasing the area under rice would therefore be undesirable and there is not also much scope for it. There is, however, the other alternative, namely, the increase of outturn from the existing areas towards which the activities of the Agricultural departments have already been directed. The main lines of attack pursued in increasing the outturn are : (i) introduction of new varieties. (ii) breeding by selection and hybridization of more prolific forms, and (iii) adoption of improved agronomic practices.

Introduction into a particular area varieties which have been found to be good elsewhere does not offer chances of striking improvements on account of different climatic and environmental conditions under which the varieties of each tract or country are grown. Introductions from extra territorial limits have not generally been found a success anywhere except that such introductions have proved valuable as parents in hybridization work. For example, some of the Burma varieties have proved valuable as parents in Madras work.

Breeding which consists in the evolution of more prolific strains either by simple selection or by hybridization has also its limitations. An increase in yield of at least 10 per cent. by growing the strains obtained by simple selection in local varieties has been proved to be a possibility as the work of the rice botanists in the various Provinces would show. Where varieties of crops are not usually grown in a pure condition as in India, there is still a wide scope in this direction and all attempts in evolving strains from local varieties would prove worth the trouble. The advantage of this 10 per cent. improvement in yield, however, depends on the rapidity with which the local mixed varieties grown by the cultivators are replaced by the selections evolved.

Extensive work on hybridization work in rice undertaken in Madras and elsewhere has proved beyond doubt that the increase in yield obtained by this method cannot be more than 10 to 15 per cent. over and above the 10 per cent. that might be expected for simple selection. But more than

the direct improvement in yield, the value of hybridization consists more often in getting into the hybrid strains some valuable ancilliary characters such as resistance to diseases, stiffer straw, better quality of grain, etc. In this respect some of the exotic varieties, though they often introduce sterility in their offspring when they were used as parents, are really proving valuable.

It will, therefore, be seen that the limit of improvement in yield by breeding is not expected to be 20 to 25 per cent. more than what it is at present. Any further improvement can be possible only by improving the cultural practices. As the several scientific reports of the Agricultural departments in India would show, investigations in various agronomic practices, cultural and manurial, are in progress and in some cases tangible results have also been achieved.

In spite of the various attempts to improve the outturn of rice in India, it is seen (*vide* table below) that the acre yields are still very low and do not at all compare with the yields of countries like Japan, Java, Italy, Spain, Egypt, etc. :—

Production per acre (cleaned rice) in lb.

Foreign cuntry.		Indian Province.	1936-37.	1935-36.
	LB.		LB.	LB.
Spain	5,730	Bengal	1,085	765
Italy	3,960	Madras	1,078	1,084
Japan	3,350	Bihar	756	567
Egypt	2,760	Central Provinces and Berar	689	555
Brazil and Peru	1,780	United Provinces	680	656
United States of America	1,930	Assam	773	705
Korea and Formosa	1,870	Orissa	704	556
Java	1,240	Bombay	866	959
India	884			
French Indo-China	1,030			
Phillippines	900			
Ceylon	550			

India.

1932-33.	1933-34.	1934-35.	1935-36.	1936-37.
843	829	827	759	884

Within India there is not very great difference in acre yields except that the Province of Bihar, Central Provinces and United Provinces record definitely lower yields than other Provinces. Comparing the different countries, leaving out Spain, Italy, America, and Egypt, some of the eastern countries also do record a bigger yield than India. It might be said that the total rice area in some of the countries recording high yields is very limited as compared to India and one should naturally expect a lower acre yield with an extensive area. This, however, does not apply to China where the rice area is said to be as extensive as if not more extensive than

in India and still the acre yield is stated to be better than in India. Japan with only a tenth of India's (excluding Burma) acreage under rice, produces nearly a third of India's crop. What scientific agriculture can do to improve the outturn of a crop is well exemplified by the work in Japan. The yield now obtained per acre in Japan is said to be two and a half times that which was obtained 50 years ago, the improvements having been brought about by the practice of intensive methods, growing improved types, and liberal application of fertilizers. The dose of manure which an acre of crop gets in Japan, namely, 80—100 lb. of nitrogen and 60—70 lb. of phosphoric acid, is far higher than what is considered essential in India. Experiments in India with fertilizers have generally proved that doses beyond 20—30 lb. of nitrogen and an equal quantity of phosphoric acid per acre are not economical. In parts of Madras even this latter dose has, in some cases, proved too much making the crop grow rank and lodge. Apart from some intensive manurial treatments which the rice crop in Japan receives, over 80—90 per cent. of the entire rice area is said to be grown with improved types bred by crop botanists. The number of rice varieties under cultivation is also said to be very limited, quite unlike in India, where, the existing varieties, may be reckoned probably in several hundreds. There are probably other improved practices followed in rice culture, in planting, in irrigating the crop, etc., that contribute to the phenomenal yields. Such improved cultural practices are probably responsible for the higher acre yields obtained in Spain and Italy also. Similarly, it is the cultural practices that must be responsible for the higher acre yields obtained, though not to the same extent in Java and China.

Though the principles adopted in the breeding of cereals may be the same throughout the world, the material available, the technique adopted and the method followed in spreading the improvements achieved may all be different. Similarly on the agronomic side different practices might have been evolved in different countries that go to enhance the yield, While the Agricultural departments in India are engaged in improving the methods of rice cultivation in several ways it is considered that lesson useful to India might be drawn from other rice growing countries. The main questions on which information would be desirable are the manuring and cultural practices, the usefulness of pedigree seed, the organization of seed supply and the technique of selection and hybridization. The rice industry of India may have its own special and local problems which may not be solved by the wholesale importation of methods in vogue in other countries but, a study of the methods adopted elsewhere by one who is familiar with the conditions in India is likely to suggest fresh lines of attack. A mere perusal of the information contained in publications about the methods of cultivation adopted in the different countries, at least such of those which produce higher acre yields than India, is not enough. It is a comparative study of the methods adopted in India with those adopted in such countries that is likely to prove useful. Such a study will at least give some information about the possibilities of increasing the output per acre in India.

Unlike in America where rice cultivation is all done by machinery, in the rice countries of the east, Java, Phillippines, China, and Japan, the cultivation is all by human labour as in India, and therefore a comparative study of the methods in these countries is sure to suggest improvements in our methods. Probably the irrigation practices as applied to rice culture also differ in these countries and they may be worthy of study. Definite

and authentic information about the details of such practices is, however, not available. For example, we had the impression that much more water was being used for rice culture in India, probably unnecessarily, as compared to Italy which produces a very much higher acre yield than in India. But a perusal of the report published by Dr. Tempany, Director of Agriculture, Malaya, about the rice culture in Italy would appear to show that this is not correct. According to his figures they use over 100 acre inches of water for a five months' crop in Italy whereas it is well within 70 inches in several parts of Madras.

The genetics of the rice plant has been studied for quite a long time in India, particularly in Madras, Bengal, Burma and recently in United Provinces, Bombay, Central Provinces, etc. The study of the rice cytology has also been taken up recently in Madras and United Provinces but the greatest amount of knowledge on this subject has come from Japan. Recent researches have shown the great interdependence of genetics and cytology and all the great advances in plant breeding in recent times have come from a co-ordinated study of the two branches. There is no doubt that the meeting of a rice botanist from India with the rice workers in Japan and discussing with them the methods and technique followed will be highly useful. Probably exchange of valuable genetical material can also be arranged for, which might prevent in some cases unnecessary duplication of work in India. It must be stated here that most of the Japanese publications are in Japanese language and only a personal discussion of the subject with the actual workers is likely to prove profitable.

From the above paragraphs it will be evident that in the interest of rice cultivation and rice studies in India it will be advisable to depute a special officer with rice experience in India to the countries like Japan, Phillippines, China, Java Malaya, etc., to make a special study of the rice cultivation and crop improvement based on modern methods followed in these countries. Such a visit would also be helpful in obtaining specially selected races of rice from the countries visited for breeding work in India. Rice being a crop of all-India importance it will be more in the fitness of things that the Imperial Council of Agricultural Research should send on deputation to these countries a competent officer rather than any Province undertaking this expenditure. The report of the special officer when ready can be made available to the Provinces.

In this connexion it may be pointed out that several of the countries in the west send special foreign expeditions at enormous cost to study the crops they are interested in, in other countries. Very recently the Rice Botanist from Malaya was sent to Madras to study the rice cultivation and breeding technique here. It is a special feature of Japan to send out their men to study particular crops in which they are interested to countries where work is being carried on in such crops. There is thus nothing new in the suggestion and the Imperial Council of Agricultural Research which is spending several lakhs of rupees for rice research in India could well afford to spend a few thousand rupees by sending some one to foreign countries for this purpose.

Personnel.—The Paddy Specialist, Madras, with his wide knowledge and experience of the rice crop would be the most suitable person for carrying out this work and it is therefore proposed that he should be deputed to undertake this tour which is expected to take about six months. A tenta-

tive itinerary which includes visits to important research centres also is attached to this note.

Expenses.—It is estimated that the total expenses of the scheme would come to about Rs. 3,500 (besides the salary of the officer). It is proposed that the salary of the officer be met by the Madras Government while travelling and other expenses (details given below) be financed by the Imperial Council of Agricultural Research.

Expenses to be met by

Madras Government.	Imperial Council of Agricultural Research.
Salary of the officer for six months at Rs. 600 per month—Rs. 3,600.	Travelling expenses—Steamer and rail fare (second class) and other transport charges = Rs. 2,000. Subsistence charge (calculated at the rate of 12s. a day for the whole period of six months = Rs. 1,500. Total expenditure to be met by the Imperial Council of Agricultural Research = Rs. 3,500.

Proposed tentative intinerary.

Place.	Halt.	Remarks.
Singapore (Federated Malay States).	One Week	To inspect rice cultivation methods.
Bangkok (Siam) ..	Do.	Do.
Saigon (French Indo-China).	Do.	Do.
Batavia (Java) and surrounding places.	Do.	Do.
Hong-Kong (China) ..	One or two days.	Visiting to further places in China will be undertaken if conditions are favourable.
Manila (Phillippines) ..	One week	To get acquaintance with agricultural practices.
Formosa	Do.	Do.
Kobe (Japan) ..	Two days	From Kobe the tour of Japan will start.
Fukuoka	One week	Visit Imperial University, Kyushu. Meet Prof. T. Morinaga and get acquaintance with his work on cytology on the rice and its hybrids.
Kurasiki	Do.	Visit Chara Institute of Agriculture and meet the Director Dr. M. Kondo, an authority on seed physiology.
Kyoto	One and half weeks.	Visit Imperial University to get acquaintance with the work of Professor Takezaki on the breeding and genetics of rice.
Nisigahara, Tokyo ..	One week	Visit the Agricultural Research Station where genealogical works on rice is being carried out by Prof. H. Terao.
Sapparao, Hokkaido ..	One and half weeks.	Visit the Faculty of Agriculture where considerable work of fundamental and economical breeding is done by Professor Akemire.
	Two weeks.	Study of rice industry and trade conditions in Japan.

The actual period of halt will take about four months. The period of journey will take about another two months. So the officer is expected to be out of headquarters for nearly six months.

APPENDIX XXXI.

Note on Subject No. 15 (c) :—Application from the Government of Sind for a grant of Rs. 74,410 spread over 5 years for a scheme on manurial and agronomic work and water requirements of rice in Sind.

A copy of a scheme received from the Government of Sind on the manurial and agronomic work and water requirements of rice for the province of Sind is appended (Annexure). The scheme involves an expenditure to the Council of Rs. 74,410 spread over five years. The Provincial Government will provide free land, laboratories with necessary equipment and bullock power ; the cost of the apparatus and furniture for laboratory and field, etc., to be met by the Provincial Government is estimated at Rs. 8,000.

2. The scheme will first be examined by the Standing Rice Committee whose report will be submitted to the Board in due course.

ANNEXURE.

SCHEME ON THE MANURIAL AND AGRONOMIC WORK AND THE WATER REQUIREMENTS OF RICE, FOR THE PROVINCE OF SIND.

1. *Introduction.*—Crops in Sind solely depend upon Irrigation, the annual rainfall being only 5-6 in. Rice is the most popular and the most extensively grown kharif crop in this Province. At present this crop occupies over 12 lacs of acres in Sind. It is a favourite crop of the cultivators who like to grow rice in preference to any other kharif crop because it is a crop which can be safely grown year after year on the same land without any decrease in yield. Moreover it is easy to grow—cost of cultivation being small, it gives good profits to the cultivators at the same time. The crop is not subject to any serious pests and diseases and it can also be grown with success in *kalarish* areas.

Improvement in rice can be effected in two ways, quality and yield. So far quality is concerned, the demand for high quality rice is not so great, especially in the case of export rice. In order to obtain highest income from rice cultivation, it is desirable to concentrate on increasing the yield of rice. The Sind Agricultural Department have done considerable amount of research on breeding and selection for a number of years and a few selected strains in the main varieties of paddy grown in Sind have been evolved and successfully introduced in general cultivation.

While good improvement in yield has been effected by the introduction of high yielding strains as the result of rice breeding work conducted by the Agricultural Department, there is still a very great scope for further improvements in yield if the methods of cultivation, irrigation and proper manuring could be improved. Further work on rice improvement should well be concentrated on this aspect of rice cultivation.

Present Position : Manurial.—Some work on the manurial requirements of rice has been done in the past at the Government Farms, particularly at Larkana and Nasirabad. Artificial manures, *viz.*, sulphate of ammonia, niciphos and super-phosphate were tried, singly as well as in combination were applied at transplanting. The results have not been conclusive.

The Departments of Agriculture in other rice growing Provinces have been conducting experiments on the manuring of rice and the results have varied with soil and climatic conditions. In Madras, Central Provinces, United Provinces, Bihar and Bengal, the response to different fertilizers has not been the same. For instance, while in Madras, the crop did not respond to phospheric fertilizer, in Central Provinces, its addition to nitrogen gave the best results. Similarly the results have varied in other cases also.

Manurial work on rice has been going on in other countries like Japan, Italy, United States of America, and others. In America, ploughing in green manuring crop has given the best results, in Italy and Spain the addition of phosphoric acid and potash were found to be necessary. In China, all the waste matter is used in manuring rice.

Water requirements.—Water requirements of rice have been partially studied on a field scale in Sind in the non-Barrage areas. The duty required to mature crop successfully has been worked out for that tract. In other Provinces, the work of this nature has not been done because this crop in most cases is rain-fed. Recently, however, in Bihar, the water requirements of different classes of paddies is being worked out. The experiments have indicated that the water requirements of the draught resistant selections is definitely low and the farm yard manure application reduces the water requirements.

In Sind, the research on the water requirements of the crop has very great importance. Due to continuous paddy cultivation, the sub-soil water table has risen in the rice areas and the problem of water requirement of rice has to be studied in relation to the sub-soil conditions. The results will be applicable to areas in other Provinces having similar conditions.

Agronomic.—A great deal of work on agronomic aspect of the rice cultivation has been done in India and abroad. The spacing of plants while transplanting, number of seedlings at one spot, when transplanting, preparatory tillage, after care, period of sowings and transplanting are some of the problems to which research work has been directed. In Sind, the work on these problems has been in a preliminary stage and systematic detailed work remains to be done.

Future lines of work.—The botanical work will continue to be done by the Department of Agriculture in Sind : the following scheme is submitted to the Imperial Council of Agricultural Research for assistance for a period of five years in the first instance, in carrying out research on the manurial and agronomic problems and on the water requirements of the paddy crop in Sind. The work done elsewhere in India (particularly in the Imperial Council of Agricultural Research Schemes) and outside will form the basis for laying out a detailed programme. The broad lines of research are set out below :—

Programme of work :

(A) *Agronomic and Cultural.*

Investigations to determine—

(*a*) Optimum seed rate.

(*b*) Best methods of production of seedlings.

(*c*) Most profitable systems of cultivation such as dry ploughing, clod crushing, etc.

(*d*) Suitability of dubâri crop (second crop) after rice.

(*e*) Transplanting date experiments and investigations into the possibility of economies of early transplanting of rice crop so as to take fullest advantage of Barrage irrigation supply. In such a study it would be possible to study effect of seasonal factors on quality and quantity of rice.

(*f*) Investigations into the methods of growing rice directly by broadcasting or drilling.

(*g*) Study of the economies of getting a second crop of rice from the stumps in the same season.

(B) *Manurial.*

(*a*) Testing of organic and inorganic manures, separately and in combinations.

(*b*) The suitable doses of manures.

(*c*) Optimum time when manures should be applied in relation to irrigation, soil conditions, etc.

Recent recommendations of the Imperial Council of Agricultural Research will be followed in laying down the detailed manurial experiments.

(C) *Irrigational.*

(*a*) Study of water requirements of rice crop with different periods of sowing and transplantation and plot duty experiments.

(*b*) Effect of rice cultivation on rise of sub-soil water level.

(*c*) Research into the necessity for the economics of the practice of utilising puncho water in rice cultivation.

This practice of 'Pancho' water entails prodigial consumption of water and it is to be determined whether it is necessary in the rice fields in general or only on kalar soils.

(*d*) To determine whether the rice crop can stand a break in irrigation and if so, at what period and how long.

This problem is necessary in order to determine whether irrigation rotations can be practised on rice canals.

The total cost of the proposed scheme for the period of five years will be Rs. 74,410, *i.e.*, on an average Rs. 14,882 per year. The Local Government will provide the free land, equipped laboratories and bullock power. The Scheme will be located at the Agricultural Research Station, Dokri and will be under the technical control of the Botanist.

*Details of proposed expenditure by the **Imperial Council of Agricultural** Research.*

Particulars.	Grade.	Amount required. First year. Rs.	Second year. Rs.	Third year. Rs.	Fourth year. Rs.	Fifth year. Rs.	Total of five years. Rs.	Average amount required annually. Rs.	Remarks.
I.—Non-recurring.									
1. **Apparatus**	..	3,000	1,000	1,000	1,000	1,000	7,000	..	
2. **Furniture for Laboratory and field, etc.**	..	1,000	..	..	..	..	1,000	..	
II.—Recurring.									
(a) ***Establishment***—									
One Agronomist	170—10—250—E.B.—15—500.	2,040	2,160	2,280	2,400	2,520	11,400	..	
One Senior Assistant ..	160—10—260 ..	1,920,	2,040	2,160	2,280	2,400	10,800	..	
One Graduate Assistant ..	110—8—150 ..	1,320	1,416	1,512	1,608	1,704	7,560	..	
One Statistical Assistant ..	60—60—70—5—100.	720	720	840	900	960	4,140	..	
Two Non-Garduate Assistants.	30—5/2—60—E.B.—4—100.	720	720	840	840	960	4,080	..	
Two Muccadams	25—1—235 ..	600	624	648	672	696	3,240	..	
Two Laboratory Boys ..	15 fixed ..	360	360	360	360	360	1,800	..	
One Peon	15 fixed ..	180	180	180	180	180	900	..	
One Clerk	25—5/2—55 ..	300	300	360	360	420	1,740	..	
		8,160	8,520	9,180	9,600	10,200	45,660	9,132	
(b) *Contingencies*	..	5,000	5,000	5,000	5,000	5,000	25,000	5,000	
(c) Travelling Allowance ..	..	750	750	750	750	750	3,750	750	
	Total ..	13,910	14,270	14,930	15,350	15,950	74,410	14,882	

APPENDIX XXXII.

Note on Subject No. 16 (b) :—Use of Talc for Polishing and Preserving Purposes in the Rice Industry.

A copy of a brief note on the "use of talc in Rice Industry" received from the Jaipur Mineral Development Syndicate is attached for consideration (Annexure I). The analysis of the powder is given in Annexure II. It is stated in the note that the powder can be utilised not only for giving a white appearance to rice for which it is polished but an immunity against insect attacks in storage. The powder is universally used for polishing rice in the United States of America, United Kingdom and the continent.

2. As early as December 1937 the Syndicate approached the Council regarding the use of Talc but it was suggested to them that they should approach certain of the rice research officers direct. The reply of the Economic Botanist, Bengal received in this connection said that "An *experiment with talc powder as preservative mixed with paddy and rice* was done last year with proper control. Both the treated and control paddy and rice were found to be attacked with insects in a couple of months. The talc powder, however, gave glossy appearance to the rice." In view of the claim put in by the firm in the use of talc as a substitute for milling and as a safeguard against damage caused by pests in storage it was considered best to discuss the subject at a meeting of the Rice Committee.

3. An extract (Annexure III) from a publication entitled 'Common pests of Grain and other Stored Produce' issued by the Department of Scentific and Industrial Research, England, which was reviewed in the July 1939 issue of the Agriculture and Livestock in India, is also enclosed for information.

4. The subject will first be considered by the Rice Committee whose report will be submitted to the Board in due course.

ANNEXURE I.

Use of Talc in Rice Industry.

Talc or Magnesium Silicate is known by various other names such as French Chalk and Steatite. This mineral has several qualities and is used in various industries, and due to certain qualities inherent of its own it is used for polishing rice, and thereby preserving same ; as also Dal and various other grains.

The advantages by the use of Talc to Rice are several and are dealt with as under :—

At present in India Rice is polished in such a manner whereby it loses its best and nutritious part, at the same time is prey to insects and also loses its qualities as a food value coming in contact with air during storage. The present day milling method of rice is the main cause of deterioration

of Rice. The milling method as it is followed now is rather too drastic. To give the rice a white appearance the milling is done in excessive form, and such excessive milling removes the fine and pinkish pericarp on the Rice, which, it has been proved is the most nutritious part of the rice. Rice as required by the public should be white, and for this reason the millers try and make the rice as white as they possibly can by such excessive milling whereby they remove the upper pericarp trying to make the rice look white.

In the milling process rice is first husked and then it is put through the milling, which is done by two cones, generally of Carborandum or some such very hard substance, and passing through these cones the rice is milled whereby it is made to look white. It is essential that such milling should be stopped. It is this milling which is ruinous to the rice as it takes away the pericarp of the rice. As the public do require white rice it is quite easy to give Rice such white appearance without any excessive milling by the use of our Talc and by Polishing the Rice ; and use of Talc also gives other added advantages.

Instead of putting the rice through the milling process between two Carborandum cones, it could easily be arranged that in place of the two Carborandum cones, two leather or rubber cones could be used and Talc together with the Rice could be put through same whereby such rubber or leather cones would not mill the rice, but will polish the rice with the powder, aud giving a coating of the powder to the rice. This method thus keeps the rice intact, preserves the fine pericarp, and at the same time makes it white and glossy.

Milling is only done to give the rice a white appearance, but the millers forget or have not the knowledge that by this process the best nutritious part of the Rice is removed, and it should be brought to the notice of all millers tha trice is ruined by the present process, and that they could easily change this process by substituting other types of cones (rubber or leather) whereby the rice is not milled but polished with the powder.

With the rice thus published with Magnasium Silicate not only does it make the rice look white but it preserves it in several ways. Talc or Magnesium Silicate is a substance which is impervious to affects of air, moisture, heat or cold. All grains, and particularly Rice, are very badly affected by moisture. Thus rice treated with Talc is immune to the bad effects of moisture. It is due to moisture that weevils quickly multiply into Rice, while rice treated by Talc would not be thus effected by moisture, and it would be difficult for weevils to attack such treated rice.

Another point about rice is that rice has to be stored and made old before it is used for consumption, and it has been proved that old rice is preferable for consumption. It is necessary that due attention should be paid for preserving it during storage. It has lately been proved by Western Science that grain when stored for a long time coming into contact with Oxygen of the air loses its essential vitamin contents, and after some time is no good as a food value. This is why it has often been discussed that old Rice although preferable for consumption is found to be lacking

in food value. The reason for this is, as has been proved, that such Rice coming into contact with the oxygen of the air loses its essential vitamin contents, and although the substance for food is there the real food value of the substance is missing. If rice is polished and has thus a coating of Talc such coating of Talc would make Rice, as far as possible, free from deterioration during storage as air would not touch it and take away the real food value. It has been stated that the real cause of Beri Beri and other nerve diseases is due to a staple diet of Rice, and such Rice being old has no food value left whereby such lack of food value produces such diseases.

Thus the whole matter that has to be considered is that the Rice after being husked should not be milled whereby the pericarp is removed. This pericarp has essential vitamin contents and is the best part of the food value of the Rice, and that this is easily done by polishing and coating it with Talc, and at the same time satisfy the public for their demand for white Rice. This coating also preserves the Rice against moisture, and does not allow the air to touch it and take away the food value of the Rice during storage.

In the beginning when we took this subject up of preservation of Rice and Grains we found that several parties and Institutes have mistaken such statements of ours and have considered our powder (Talc, Magnesium Silicate) as a sort of insecticide. We wish to draw the attention to the fact that our powder is not an insecticide. From reports we have received of tests carried out at different stations we find that invariably such tests have been made where the powder has merely been dropped in the grain, just as any insecticide powder is sprinkled or dropped on an object, with the idea of keeping insects away. We do not recommend or state that it would serve such purpose. The ideas that the Talc powder should be well rubbed on to the grain, as we have explained above, whereby the grain gets a coating of this powder, and being thus coated will not be affected by moisture, will be less readily attacked by insects, and also will retain its food value during storage as air cannot touch it. Merely lightly sprinkling the powder in the grain or on top of the grain will not serve the purpose of preserving the grain. If it is required as an insecticide for sprinkling purposes Talc could be used as an extender of a strong insecticide. Talc has very great absorbing powers. Suppose a large quantity of insecticide has to be used for grain, it could then be done that a small quantity of insecticide could be mixed with a large quantity of Talc and such mixture could be used as a light form of insecticide either sprinkled or mixed with the grain whereby the grain could be preserved from attacks of weevils and insects. Pyrethrum either in powdered or liquid form is one of the best form of insecticide and which when used in very light quantities would be non-injurious even for food stuffs, and if mixed with Talc powder a very satisfactory mixture could be made which could serve as a perfect insecticide for grain. Talc or Magnesium Silicate by itself is to be primarily used for polishing and for giving a coating to the grain or rice, but if it is to be used only as an insecticide or for sprinkling it should first be treated with an addition of a stronger and a real insecticide like Pyrethrum whereby the effects of such Pyrethrum is distributed lightly over a large area, and which would be sufficient to keep the grain free from weevils or insects.

ANNEXURE II.

THE JAIPUR MINERAL DEVELOMENT SYNDICATE.

Analysis of Dagota Steatite (Soapstone, Talc, French Chalk) by Dr. Bernard Dyer and Partners (Ltd.), 17, Great Tower Street London, E. C. 2.

Results of Analysis.

Silica	61·8
Magnesia	31·4
Alumina	0·8
Iron (Calculated as Ferrous Oxide) ..	0·7
Lime	Inappreciable.
Water of Hydration and traces of Alkalies, etc.	5·3
Total ..	100·0

ANNEXURE III.

EXTRACTS FROM THE PUBLICATION ENTITLED ' COMMON PESTS OF GRAIN AND OTHER STORED PRODUCE ' ISSUED BY THE DEPARTMENT OF SCIENTIFIC AND INDUSTRIAL RESEARCH, ENGLAND.

* * * * * * *

Measures requiring technical knowledge.

* * * * * * *

(b) Chemical measures.

* * * * * * *

Dusts.

The protection of grain by mixing mineral dusts with grain has the advantage of being easily carried out with unskilled labour and simple technique, and the dusts are removed prior to milling in the routine cleaning processes which the grain undergoes. Such dusts, which must be non-poisonous to human beings, include finely divided silica, rock phosphates, and precipitated chalk. When perfected this method may give cheap and lasting protection of grain in store, but further experimental work is needed before it can be recommended for general use.

* * * * * * *

APPENDIX XXXIII.

Note on Subject No. 16 (c) :—Question whether it is necessary to place the Standing Rice Committee on a permanent basis on the lines of the Indian Central Cotton Committee.

At the last meeting of the Standing Rice Committee one of the members gave notice that he would raise the question of making this Committee permanent on the lines of the Indian Central Cotton Committee, but he did not move the proposal in the Committee.

An assurance was given in the Central Legislative Assembly in connection with certain interpellations that this would be considered at the next meeting of the Committee. The subject is accordingly placed before the Committee for consideration.

APPENDIX XXXIV.

Note on Subject No. 17 (i) :—Report on the Cultivation of Pyrethrum in India.

At its meeting held in November 1938, the Advisory Board considered the reports of the preliminary trials on the cultivation of pyrethrum, at the various selected centres in India. Further reports (Annexure) from some of these centres are circulated for information.

ANNEXURE.

BRIEF REPORT ON THE RESULTS OF THE EXPERIMENTS CARRIED OUT ON THE CULTIVATION OF PYRETHRUM IN THE BOMBAY PROVINCE.

*   *   *   *   *   *   *

Experiments on Pyrethrum at the Dharwar Farm, Dharwar.

At the Dharwar Farm, the seeds were first sown in a seed-bed at the end of May 1936 and were transplanted in beds 18 in. apart on a permanent plot in the middle of July 1936. The plants grew well for about four months, but were later on affected by "Fusarium" and a large number of plants died before flowering. Out of 950 plants, only 20 survived in a very weak condition. The whole crop was removed in March 1937.

The same experiment was tried again in May 1937. Fresh Pyrethrum seed was obtained and sown at the end of May and the seedlings were transplanted on ridges 18 in. apart. In the third week of June the distance between plants was 9 in. As was observed in the previous year, a large number of plants were affected by "Fusarium". About 50 per cent of the plants now survive and only three plants are in flowers. The plantation is still under observation.

*   *   *   *   *   *   *

It seems from the above facts that Pyrethrum cultivation is not a success at the Dharwar Farm.

Experiments on Pyrethrum at Hingne near Poona.

The Pyrethrum seed was sown at the Farm of Mr. Vartak at Hingne near Poona in July 1937. But there was no trace of germination till the middle of August. The seed was found to be very poor in germination and hence fresh seed was obtained and sown in January 1938. The seed was sown in January 1938. The seed was sown with great care but did not germinate well. The plants did not flower and the growth was weak and stunted throughout the growing period. The surviving seedlings—about half a dozen—were taken and planted in the Poona City. Only 2 of these seedlings are found to survive to the present day. The seedlings have not flowered so far.

Under both the trials the seed failed to give satisfactory results.

A brief report on the results of experiments carried out on the cultivation of Pyrethrum in the Punjab.

* * * * * * *

It has been observed that the plant cannot stand heavy rainfall. At Palampur, death rate due to excessive rain has been very high. Only 360 plants out of 1,200 planted there have survived. Murree, Samli and Kulu seem to be suitable for its cultivation. In the Kulu Valley, Katrain and Manali are likely to give the best results, as rainfall there is moderate and climate is congenial. Plants come into flower at all these places in March and continue upto the end of June.

One pound of flowers was supplied to Col. R. N. Chopra, Director, School of Tropical Medicine, Calcutta, for analysis and biological tests. His report is expected shortly.

Two samples of flowers from Palampur and Kulu were supplied to the Director, Malaria Institute of India, Kasauli, in August 1938. He reported that the sample of Kulu was superior to that of Palampur. The Kulu flowers yielded a solution which when used in proportion of 2 lbs. per gallon will have the same insecticidal value as pyrocide 20.

Trials in some of these places have been carried out for one season only. The data obtained are not sufficient to decide which other localities would prove most suitable for the cultivation of Pyrethrum. Seed sufficient to put down 2-3 acres has been collected from these plots. Arrangements will be made to get land on lease or otherwise at Kulu for extension of these experiments.

Experiment on the cultivation of Pyrethrum Cinerariaefolium in the United Provinces.

* * * * * * *

Importation of Seeds.—Seed of Pyrethrum was imported from Messrs. Sutton and Sons, Reading, England, through their Agents in Calcutta.

* * * * * * *

Germination.—The germination started from 21st October 1938 and continued upto 1st November 1938 and was poor being about 25 per cent.

* * * * * * *

The plants continued healthy growth until the rains had broken and started showing signs of unhealthiness just after the rains broke. As soon as this was observed some were transplanted on to raised ground and some into pots and kept in shade. The continued wet and damp period was too much for them and now only a few poor specimens have survived in pots. They are being watched very carefully, but I have no hope of growing the plant successfully in the form of field crop. It doubtless can be grown in the form of a pot plant provided sheltered during the rains but so far as the economic production of this insecticide is concerned, it seems impossible to do this on a sufficiently large scale to be a paying concern but the Experiment will not be discontinued and seeds brought over from a Farm near Dubrovnic (Dalmation Coast), Yugoslavia, have been sown and the results will be watched.

II.—Government Gardens, Dehra Dun.

* * * * * * *

Importation of Seeds.—Seed of Pyrethrum was imported from Messrs. Sutton and Sons, Reading, England, through their Agents in Calcutta.

Germination.—The germination started from 1st November 1938 and continued for 10 days. The germination was over 50 per cent but about 10 per cent seedlings died due to unknown causes, before transplanting.

* * * * * * *

Compared with Saharanpur, at Dehra Dun, the germination was better, the number of casualties less and growth is better From this observation it is concluded that Pyrethrum likes higher elevation and cooler climate.

The plants continued their healthy growth until the rains had fairly broken. Sufficient arrangement was made for drainage with the result that there were a few casualties upto 18th August 1939. After that date the plants could not stand the heavy showers of 12th August 1939 which was over 9 in. in one day and the continued damp period was too much for them with the result that not a single plant is left. The result is very disappointing but the experiment will be continued and seeds have been sown.

* * * * * * *

Only 2 plants out of 400 flowered. All plants were transferred to Tari Khet Farm for trial.

* * * * * * *

10 plants germinated and were transplanted in pots

Results from the germination of this sowing appear to be very poor, so far only a few seedlings have appeared.

From the above it would appear that Pyrethrum seed experimented with here has failed to establish itself under Chaubattia conditions.

PYRETHRUM AT TERNAB REPORT OF THE TRIAL 1939.

A small quantity of seed of Pyrethrum was received from the Imperial Council of Agricultural Research in June 1937. A part of it was sown at this Station. About seventy plants were obtained from the quantity sown. These yielded flowers in spring this year.

In June 1939 about 500 flowers weighing more than 3 ounces (dry weight) with a size ranging from ¼ inch to 1½ inch were obtained. From these about two ounce seed was taken out. In addition to this 1,200 floral buds weighing about 2 oz. (dry) were collected. A specimen was forwarded to the Secretary, Imperial Council of Agricultural Research, Delhi, and another to the Imperial Entomologist Imperial Agricultural Research Institute, New Delhi. The latter replied that the quantity was small and stated that "not less than four or five pounds would be required to carry out a satisfactory biological assay".

From the quantity of seed obtained a little was sewn in July last, but it failed to germinate. Sewing was tried in early October again, which has germinated. The seedlings are growing in a box. When they grow up, will be transplanted in beds. There are large number of

tillers in each plant growing in the first plantation. A number of such tillers along with the roots have been removed and transplanted in a new area. Trial last year showed that this method of increasing the number of plants can be carried out successfully. In this way an additional small area has been brought under transplanted tillers.

A small quantity of seed still remains, arrangements for sowing this in beds, boxes and pots are being made.

CULTIVATION OF PYRETHRUM AT SAKRAND.

An experiment on cultivation of Pyrethrum was carried out at the Agricultural Research Station, Sakrand, during the year 1937-38 but the crop did not germinate at all. No further trials have been made on Pyrethrum.

REPORT ON THE CULTIVATION OF PYRETHRUM.

A small quantity of Pyrethrum seed was sent by the Imperial Council of Agricultural Research to the Director on 8th June 1937. This was sown in beds partly in the Breeding Cage at the Laboratory and partly at Hobbal on 17|18th June 1937. Germination was fair and 250 seedlings were obtained. These clumps were divided and transplanted recently on the Hobbal Farm. The plants are put on slight ridges 1½ ft. apart and the distance between the ridges is also 1½ ft. 550 transplants were planted in May and 420 in September of this year. About 200 plants are yet to be transplanted. The plants have not flowered as yet.

A further quantity of seed was again sent by the Imperial Council of Agricultural Research on 20th March 1939. Germination was poor and with great difficulty a dozen seedlings were raised in seed pans. Some of these are growing very well in the Laboratory.

REPORT ON THE CULTIVATION OF PYRETHRUM ON THE COFFEE EXPERIMENT STATION, BALEHONNUR (MYSORE).

Pyrethrum was introduced to the Coffee Experiment Station, Balehonnur, on 11th July 1938.

* * * * * * *

From the preliminary observation made so far, it is suggestive that Pyrethrum may be grown in areas where rainfall is not very excessive or continuous. This is borne out by the fact that a few clumps of Pyrethrum that are grown by the District Forest Officer at Chikmagalur are seen to be doing quite well and almost all of them flowered freely.

PYRETHRUM CULTIVATION IN MADRAS.

Yercaud.—The trial cultivation of Pyrethrum (Chrysanthemum coccineum willd) was commenced at Yercaud (Shevroys) in 1937. The land was made available by one Mr. E. H. Dickins, a planter, free of rent.

2. Pyrethrum seeds were sown in a small nursery on 22nd July 1937. The germination was satisfactory and the seedlings were planted 9 inches apart each way on 9th October 1937, with drains between the rows in an area of 1|16th of an acre. The seedlings established well, made a growth of about 9 inches and put out a number of tillers, in the course of 10 months. Two plants were noted to be in flowers in July 1938.

3. The plants in shade were noted to be more bushy than the rest. The planter applied poultry manure to one of the rows, but the effect of manuring was not evident.

4. *2nd year of growth.*—The plants made slow growth and a few plants started flowering after the rains in April 1939 and by about the end of September. 53 plants out of a total population of 1,096, or about 5 per cent were in flowers. General flowering of the crop may probably be expected next year—the 3rd year of the crop. It is not possible to say at this stage whether the cultivation of Pyrethrum in the Shevroys would be profitable.

* * * * * * *

Kotagiri.—After the North-East Monsoon broke out and on receipt of good soaking rains by the end of October 1938 all the seedlings which were in the original nursery bed as well as those planted at 6 in. apart were transplanted on 9th and 10th November 1938 at 18 inches apart between the plants.

* * * * * * *

The plants began to put forth flowers in February 1939 and the rate of flowering was on the increase till the end of May. Afterwards the flowering was on the wane and by the beginning of October it has almost come to a standstill.

The average height of the plants is now 1 foot and the average spread 1½ feet. The biggest plant is 2¼ feet tall and the foliage has spread to a diameter of 2½ feet.

The flowers were being collected when the majority of the flowers possessed fully developed petals but before they have completed flattened out. The flowers were cut with about 6 inches of stalk on dry bright days and dried by spreading in the shade when the flowers could crumble easily between the fingers the stalk was removed. The dried stuff is kept stored in paper packets and cigarette tins. So far 3 lbs. of fresh flowers were collected which has given ¾ pounds of dried stuff.

* * * * * * *

Nanjanad.—Pyrethrum seed was broadcasted in the nursery bed. 1½ tolas weight of seed was sown over half a cent plot on 1st August 1939.

* * * * * * *

During the 3rd week of September five seedlings were noted in the nursery bed. They are now about half to one inch in height and look healthy. Poor germination might be due to the poor vitality of the seed. These seedlings are being given utmost care to get some acclimatised seed for further trials if possible. It is too early to pronounce any remarks on its cultivation at the station. Except the five seedlings mentioned above no further new seedlings were noted so far.

About 300 seeds were sown on the same day in seed pans to see whether they will germinate well under protected conditions and care in the glass house. Not a single seed germinated so far inspite of the best attention paid. This also confirms that the vitality of the seed is poor.

* * * * * * *

Ootacamund.—A packet of acclimatised seeds of the above was obtained from the Pomological Station, Coonoor and sown under glass on 1st July 1939. The seeds germinated very well in about 12 days and the resultant 123 seedlings were picked out in pans on 3rd August 1939. Two beds, one in the Toda Mund nursery and the other in the new Band Stand terrace, were prepared after applying cattle manure at the rate of 2 tons per acre. The acreage of the above two beds is about ½ a cent. Forty-eight seedlings were planted in the Toda Mund nursery and 75 in the new Band Stand terrace. There are at present only 110 seedlings about 4 in. to 5 in. high growing satisfactorily, the rest having wilted and died. The area under this crop will be extended as soon as weather conditions permit and further trials undertaken at the Botanic Gardens, Ootacamund.

* * * * * * *

Coonoor.—The seeds sown in July 1937 started germinating in about 3 weeks and continued to germinate for about six weeks. The germination was good and 700 seedlings were raised.

* * * * * * *

The growth of the plants during the first three months was very slow.

* * * * * * *

The collection of flowers was started in April 1939.

* * * * * * *

The plants were not looking at their best during August and September for want of rains ; but since the advent of rains in October, the plants have started growing and are looking healthy.

* * * * * * *

Another lot were also sown in the Botanic Garden nursery at Ootacamund in April 1939. The germination was very poor and only 11 plants could be raised.

* * * * * * *

One ounce of seeds in June and 4 oz. in September were collected. Half an ounce of seeds was sown on 24th June 1939 in the open.

* * * * * * *

The germination was very good and 950 seedlings were raised.

* * * * * * *

The acclimatised seeds gave a better percentage of germination and the seedlings also are found to be more vigorous than the seedlings raised from the imported seeds.

* * * * * * *

Half pound of dried flowers from the Pomological Station and half pound of *Pyrethrum* flower powder from Emerald Valley Estate have been sent to the Government Entomologist, Coimbatore for conducting the necessary tests, and the results are awaited.

Reports on the Cultivation of Pyrethrum.

Pyrethrum Trials at Parachinar.

Pyrethrum trials in Kurrum were started from March 1936. Out of the first sowing of few ounces of seed in nursery, only eight survived. New sowings were tried in March and April in the next year but these all failed. On July 1937 a small quantity of seed obtained from the Imperial Council of Agricultural Research was again tried which germinated. The seedlings were transplanted in an area of about 1|9th of an acre.

Major part (1|13th of acre) of the area was on irrigated land and 1|4th of the above on dry land, a further 1|4th on terraced flooded land. Plants in last named year failed.

Buds and open flowers were collected in May and June 1939. Total weight (dry) of these is lbs. 18.

Report on the Cultivation of Pyrethrum at the Government Experimental Farm, Kanke (Ranchi).

Introduction.—It was for the first time in the year 1937 that the cultivation of Pyrethrum was taken up at the instance of the Imperial Council of Agricultural Research with a view to study the possibility of growing it in India. Accordingly some seed of the same was sent to this range for its cultivation at the Kanke farm as per letter No. 7214, dated the 30th June 1937 from the Director of Agriculture, Bihar.

Cultivation in 1937.—Seeds obtained were sown in well prepared seed boxes on 8th October 1937 but unfortunately, they failed to germinate (This has been reported to the Director of Agriculture, Bihar in my letter No. 5287, dated the 2nd November 1937).

Cultivation in 1938.—A fresh supply of seed was again sent in February 1938 (as per Director of Agriculture's letter No. 2674, dated 26th February 1938) and the seeds were sown in seed boxes on 8th September 1938. This year the germination was about 50 per cent. When the seedlings had 3 leaves (including Cotyledon leaves), they were transplanted on 17th October 1938 in well prepared small beds at a distance of 18 in. each way. The beds had a heavy dose of compost before the transplanting. The plants got rooted well and became healthy bushy and green. A dressing of mixture of Nicifos II and compost was given in January 1939 and the plants responded well to this manuring. The plants remained quite healthy till the middle of July and started flowering when they died due to heavy rains.

APPENDIX XXXV.

Note on Subject No. 18 (a) :—Technical Programme of work at the Tobacco Research Sub-Station, Guntur.

The attached technical programme (Annexure) of work at the Tobacco Research Sub-Station, Guntur, is for the consideration of the Advisory Board. It may be recalled that at its last meeting held in May 1939, the Tobacco Committee and the Advisory Board considered the report of the Sub-Station for 1937-38, and recommended that the future programme of work should be entirely recast with special reference to manurial experiments, and that further development of work should be considered at the end of two years when the present scheme (started in August 1936) would terminate. The Director, Imperial Agricultural Research Institute has accordingly submitted a revised technical programme for future work at the station.

2. The technical programme will first be considered by the Botany and Physiology Committee, whose report will be submitted to the Board in due course.

ANNEXURE.

Tobacco Research Sub-Station, Guntur.

Technical Programme.

1. *Study of the effect of various manures or combinations of these on the quality of Cigarette Tobacco Leaf.*

Manurial Experiment I.

A manurial experiment with 9 treatments will be laid as follows :—

1. N.
2. P.
3. K.
4. N, K.
5. N, P.
6. P, K.
7. N, P, K.
8. Farm yard manure.
9. No manure.

N	..	..	@ 20 lbs. per acre.
P_2O_5	..	..	@ 20 lbs. per acre.
K_2O		..	@ 50 lbs. per acre.

Farm yard manure @ 5 cart loads to provide 20 lbs., N.

Single sources of fertiliser will be used.

Six replications (Randomised blocks).

Size of plot 42′ × 27′ (2·6 Cents).

Manurial Experiment II.

Variations of a fixed manurial formula will be tried.

The treatment will be

	N		P_2O_5	K_2O
1.	15	..	75	60
2.	15	..	75	120
3.	15	..	75	0
4.	15	..	150	60
5.	15	..	0	60

6. Farm yard manure @ 5 cartloads per acre.
7. No manure.

Single sources of manure will be employed.

NOTE.—It may be recalled that the Tobacco Committee wanted all these treatments to be tried with a basal dressing of farm yard manure, but from the letter of the Agricultural Commissioner it appears that basal dressing is to be a separate entire treatment.

Six replication (Latin square).

Size of plot 39′ × 24′ (2·1 Cents).

2. *Study of the effect of Rotation Crops on the Growth and Quality of the subsequent Cigarette Tobacco.*

The rotations will be

1. Tobacco after Tobacco.
2. Tobacco after Variga (Panicum meliaceum).
3. Tobacco after Rabi Sorghum.
4. Tobacco after Groundnut followed by Rabi Sorghum.

The crops preceding tobacco have been sown this year.

3. *Breeding of improved varieties of Cigarette Tobacco suitable for Indian conditions.*

(a) Trial of varieties suitable for cigarettes.

A trial with the following varieties has been started this year—

1. Harrison's Special.
2. Bonanza.
3. Gold Dollar.
4. Dungowan.
5. Warne.

Six randomised blocks 33′ × 15′ (1·14 Cents).

(b) Seed acclimatisation experiment.

Five randomised blocks 33′ × 15′ (1·14 Cents).

Harison's Special from several sources (imported and selfed seed from acclimatised stocks) will be tried to study the problem of crop deterioration following acclimatisation. This is the second year of trial and will be continued.

(c) Study of economic characters of varieties, selection hybridisation, etc., with a view to the evolution of desirable economic types for Indian conditions.

4. Study of the relationship between the quality of Cigarette Tobacco Leaf and the soils on which it is grown.

This will be done by purchasing green leaf from the three district soil types of this tract, *viz.*, Black, Alluvial, and Red or Reddish black, and curing them at the Tobacco Research Sub-Station. This cured samples will then be sent to trade experts for valuation.

5. *Study of Tobacco Diseases.*

The study of the leaf curl disease will be continued at Pusa.

APPENDIX XXXVI.

Note on Subject No. 16 (c) :—Technical Programme of work under the Scheme of Research on Pan Cultivation in the Central Provinces and Berar.

At its meeting held in February 1935 the Advisory Board approved of a scheme for research on *pan* cultivation in the Central Provinces at a cost of Rs. 19,200 spread over five years (*vide* pages 27, 192—99 of the proceedings). The Governing Body sanctioned it in September 1935 and funds were allotted in September, 1939. The Government of the Central Provinces and Berar propose to start work on the scheme from 1940-41 and have submitted a technical programme for work on the scheme (Annexure).

The programme is for the consideration of the Advisory Board. It will first be examined by the Botany and Physiology Committee whose report will be submitted to the Board in due course.

ANNEXURE.

THE TECHNICAL PROGRAMME OF WORK PROPOSED FOR THE " *pan* " SCHEME.

Four acres will be leased for the scheme at Ramtek ; these 4 acres will be either in one plot or in 2 plots of 2 acres each. This depends upon the land we shall be able to secure.

I. Two acres will be reserved for the experiments in connection with the remedial measure for the control of foot-rot and anthracnose diseases.

(*a*) Two one-fourth acre plots will be left untreated to serve as " controls ".

(*b*) In the remaining one acre and half the following trials will be made :—

(1) Bordeaux Mixture (2—2—50) 6 times a year to be applied to the soil.

(2) Bordeaux Mixture the first treatment to be applied before planting will be of 2—2—50 strength followed other treatments of 1—1—50 strength in the dry season and of 2—2—50 strength in the wet season, all together six treatments in a year.

(3) Bordeaux Mixture (2—2—50) 4 times a year.

Bordeaux Mixture will be sprayed on the plants against the anthracnose disease at the time the soil treatment is given after the first treatment.

II. In the remaining two acres the following trials will be made :—

(1) Half acre : varieties of *pan* from Bengal, U. P., Bombay and Madras will be grown along with local varieties Kapuri and Bangla to see if these are resistant to foot-rot. This area will not be treated with Bordeaux Mixture.

(2) Half acre. Same as above but the soil will be treated with Bordeaux Mixture.

III. *Manurial Treatment.*—Oil-cake—*til* or castor—is usually used as manure in a *pan* garden. Oil cake is expensive and it is therefore proposed to see if oil cake can be replaced by some combination of chemical manures

like Amonium sulphate, super phosphate, Niciphos, etc. The details of the experiment will be worked out in consultation with the Agricultural Chemist when he returns from leave next month.

Half an acre of the plot under manurial treatment will not be treated with Bordeaux Mixture and in the other half Bordeaux Mixture (2—2—50) will be applied 6 times a year.

IV. A study of the fungi that cause foot rot and an anthracnose diseases at Ramtek, in other parts of the C. P. and Berar, and in other *pan*-growing countries of India will be undertaken.

Other diseases of *pan* occurring in this Province will also be investigated as opportunity arises.

APPENDIX XXXVII.

Note on Subject No. 18 (d) :—Technical Programme of Work on the Scheme of Research for Wheat Breeding for the Black Soil Areas.

The scheme of research for wheat breeding for the black soil areas submitted by the Government of the Central Provinces and Berar was considered by the Botany and Physiology Committee and the Advisory Board in November 1938 and sanctioned by the Governing Body in July 1939. While recommending the scheme, the Botany and Physiology Committee and the Advisory Board desired that the following two items, being of an academic nature, should be left out of the programme.

(i) Work on inter-generic crosses local wheats and wild prototypes.

(ii) Experiments to induce polyploidy with the object of securing desirable mutations.

(iii) It was also suggested that the agronomic experiments and those on manuring and tillage, etc., should be left out of the Scheme and be carried out by the Department.

2. The detailed technical programme revised on the lines suggested by the Advisory Board (Annexure) is for the consideration of the Board. It will first be considered by the Botany and Physiology Committee whose report will be submitted to the Board in due course.

ANNEXURE.

DETAILED TECHNICAL PROGRAMME OF WORK FOR THE "CENTRAL PROVINCES SCHEME FOR BREEDING WHEATS SUITED TO BLACK SOIL AREAS" REVISED ON THE LINES SUGGESTED BY THE ADVISORY BOARD.

PROPOSED PROGRAMME OF WORK :—The most urgent necessity is to produce rnst-resistant varieties. The first step towards this will be to link up the work of the new station with the research in progress on the same problem at Delhi and Simla with which the officer in charge of the scheme will be required to keep in the closest contact. The rust research programme will include.

(1) *Inter-Varietal crosses.*—In order to accomplish this the various physiologic forms of rust occurring in black soil areas will be identified and the extent to which each of them separately is responsible for damage to any wheat varieties will be studied. The data thus collected will be corroborated with the similar work being carried out at Delhi and Simla.

After the above data has been collected the wheat varieties found to be immune or resistant to various physiologic forms will be crossed with the local high yielding varieties within the same group as for instance the high yielding vulgare wheats will be crossed with the resistant vulgares, and the high yielding durums will be crossed with the resistant durums. If the local wheat varieties are not found to be resistant to the attack of rust fungi then resistant varieties of durum and vulgare will be obtained from outside—either from India or abroad, for this purpose.

In making the inter-varietal crosses special attention will also be paid to the quality of the grain in accordance with the requirements of the local wheat markets.

(2) *Inter-specific crosses.*—Triticum dicoccum var. Indicum and Triticum dicoccum var. Ajar, mihi are the only two varieties of wheat found in the Central Provinces which are known to be immune to all the rust fungi, but unfortunately they are very low yielders and possess grain of very poor quality. They can, however, be crossed readily with durums ; as for instance, Bansi, Jalalia, and Haura which are good yielders but are susceptible to the attack of rust. Crosses therefore between these two classes of wheat will be made to make the hard wheats of black soil areas resistant to the attacks of rust. The crosses between vulgare (which are local high yielding wheats) and the immune dicoccums are always sterile. In order to effect fertile hybrids between these two groups durum wheats will be used as a means of "bringing" species between vulgares and dicoccums.

(3) *Frost problem.*—There has not been any work done in the Central Provinces and Berar from the point of view of evolving frost resistant varieties. Work in this connection will consist in making a preliminary survey of the effect of frost on the different local varieties. The data as regards the period of the occurrence of frost in different wheat growing tracts will be recorded and the selection of the unit types which are not affected will be made. The anatomical studies of the various parts of the affected as well as unaffected plants will be made with a view to find out the actual parts which are fatally affected by frost.

The study of the root system of these plants will also be taken up to find out if there is any correlation between the depth of the root system of the capacity to resist frost. Further work will depend on the results of this survey.

(4) *Special study of durum and vulgare wheats.*—A special study will be made of "durum" and "vulgare" wheats with the object of securing strains of these species which will be suitable for the later maturing northern areas, and strain suited to the earlier maturing southern areas.

(1) In order to accomplish this all the varieties of durum and vulgare wheats will be collected from all the 'talukas and districts' of the black soils areas and identified. They will be grown in single line cultures and their economic and morphological characters will be studied in detail. The promising unit types thus isolated will be tested for yield along with the standard wheats of the black soil areas. Along with this the trial of the exotic varieties of wheats will also be taken up.

(2) If the climatic conditions of the black soil areas will not suit the exotic varieties they will be crossed with the local ones, in case these exotic varieties will have any character of important economic value which could be made use of in hybridization.

The usual technique of selection, selfing, hybridization and yield trials will be followed in the above experimental work.

APPENDIX XXXVIII.

Note on Subject No. 19 (a) :—Proposals for the Extension of the Potato Breeding Scheme for Northern India at a cost of Rs. 84,000 (Round) spread over five years.

The Director, Imperial Agricultural Research Institute, has applied through the Government of India, Education, Health and Lands Department (Annexure I) for an extension of the potato breeding scheme for Northern India, at Simla, for a period of five years from 1st April 1940. The proposals were examined by the Agricultural Commissioner with the Government of India, and as a result of his suggestions (Annexure II) the Director has revised his proposals. These (Annexure III) involve, so far as the Council is concerned, a grant of Rs. 84,000 spread over five years, inclusive of a non-recurring grant of Rs. 9,200. The Government of India have approved of the scheme.

2. There are a number of variations from the original scheme which are detailed below :—

Item.	*Amount.*
	Rs.
(1) Contributory Provident Fund	1,688
(2) Leave salary contribution	2,750
(3) Increased travelling allowance	1,500
(4) Increased labour charges	5,000
(5) Increased equipment (chemicals, etc.)	2,000
(6) Miscellaneous expenditure	3,250
Additions to establishment.	
(1) One Assistant (Rs. 100—5—120)	6,650
(2) One Store-keeper (Rs. 40—2—72)	2,640
(3) One Mali (Rs. 20—20—23—23—26)	1,344

(*Note.*—The other increases are due to small increase in pay and the introduction of a time scale.)

The scheme was originally considered by the Advisory Board in February 1934 and September 1934 (*vide* pages 42-43, 509—545 and pages 48, 517—531 of the printed proceedings) and the site was chosen after a series of preliminary co-operative trials in various centres in India. It was initiated on 1st April 1935, and the total cost so far sanctioned for the scheme is Rs. 92,430.

The proposals are for the consideration of the Advisory Board. They will first be considered by an *ad hoc* Committee, whose report will be submitted to the Board in due course.

ANNEXURE I.

LETTER FROM G. S. BOZMAN, ESQUIRE, C.I.E., I.C.S., DEPUTY SECRETARY TO THE GOVERNMENT OF INDIA, DEPARTMENT OF EDUCATION, HEALTH AND LANDS, TO THE SECRETARY, IMPERIAL COUNCIL OF AGRICULTURAL RESEARCH, NO. F. 40-2/39-A., DATED THE 15TH MAY 1939.

SUBJECT.—*Potato Breeding Sub-station, Simla—proposal for extension of the Scheme.*

With reference to your letter No. F. 2/39-G., dated the 10th March 1939, I am directed to forward a scheme submitted by the Director, Imperial Agricultural Research Institute, for the continuance for a further period of five years, with effect from April 1940 of the Potato Breeding Scheme at Simla, together with a copy of his letter No. 3163, dated the 1st May 1939. The Government of India approve the scheme, which it will be seen, involves an expenditure of Rs. 71,100 recurring and Rs. 14,200 non-recurring spread over that period. In view of the impending meeting of Advisory Board of the Imperial Council of Agricultural Research, I am to explain that preliminary consultation with the Imperial Council of Agricultural Research is being dispensed with, and the scheme is being forwarded direct with the request that the decision of the Council on the subject may be communicated to the Government of India in due course.

COPY OF A LETTER FROM THE DIRECTOR, IMPERIAL AGRICULTURAL RESEARCH INSTITUTE, NO. F. 3163, DATED THE 1ST MAY 1939.

SUBJECT.—*Potato Breeding Sub-station, Simla—proposal for extension of the Scheme.*

With reference to the Government of India, Education, Health and Lands Department endorsement No. F. 65-10/39-A., dated the 25th March 1939, forwarding a copy of letter No. F. 2/39-G., dated the 10th March 1939, from the Imperial Council of Agricultural Research, I have the honour to forward herewith (in duplicate) a proposal for the extension of the Potato Breeding Scheme at Simla for a further period of 5 years from April 1940 with the request that if the scheme is approved by the Government of India it may kindly be forwarded to the Imperial Council of Agricultural Research for consideration at the next meeting of the Advisory Board.

The scheme is estimated to cost Rs. 85,300 (Rs. 71,100 recurring and Rs. 14,200 non-recurring) during the extension period.

Scheme for the extension of the potato breeding scheme.

1. Introduction.

2. The work already done (including the work to be done up to the end of the present period).

3. The work proposed to be done in the extension period.

4. Technical programme of work for the extension period.

5. Detailed estimates of expenditure for (*a*) the original scheme, and (*b*) the extension scheme.

1.—Introduction.

In 1934 the Imperial Council of Agricultural Research approved of a scheme for breeding potatoes for India. This work was to be carried out by the Imperial Economic Botanist at the Botanical Section of the Imperial Agricultural Research Institute and at a Sub-station in the hills, the latter being financed by the Imperial Council of Agricultural Research. The scheme actually came into operation on April 1, 1935. During the first year cooperative potato trials with a standard set of 19 varieties was carried out at Simla, Murree, Kulu Valley, Chaubattia, Khabrar and Shillong, with a view to select a site for the Sub-station which would provide suitable conditions for the potato to flower and set berries. A report of the results of this co-operative experiment which was submitted in December 1935 indicated that flowering and berry formation were very satisfactory at Simla and Chaubattia and also at Katrain and Manali in the Kulu Valley, of these Simla was finally selected for the location of the Sub-station.

During 1935-36 the work at Simla was carried out at the Rust Research Laboratory and again in 1936-37 at a temporary station at Villa Hardinge (near the Rust Research Laboratory). Owing to the lack of irrigation and other facilities the work during these two years had necessarily to be conducted on a restricted scale. In 1937-38 however the Sub-station moved to the new site which has been acquired at Kanlogh, about two miles south-east of the Simla General Post Office.

The Sub-station area has now been fenced, irrigation pipes laid out and water reservoirs built. The construction of a controlled illumination house and an insect proof house has also been completed. Accommodation for laboratory, office, godowns and for the residence of those members of the staff whose presence is necessary at the site is available in the houses acquired along with the land. It is however necessary to construct a bullock shed and to effect certain additions and repairs to the buildings.

Sir John Russell who visited the Sub-station in 1937 commented favourably on the work in progress.

2.—The work already done.

Original Programme of Work.

The programme of work of the original scheme is given below :—

(1) Collection and classification of the varieties grown in India, paying particular attention to the *desi* varieties.

(2) Study of the available South American material to discover forms most likely to be of value for crossing, under Indian conditions.

(3) Production of varieties with desirable characters such as immunity or high resistance to blight and virus diseases, etc., by selection from seedlings and by hybridization.

(4) Study of flowering, fertility and sterility, and other selected problems, a sound knowledge of which is essential if object (3) is to be achieved.

(5) Study of the problems of dormancy and storage.

(6) Genetical studies and investigation of any other problems that may arise.

The progress already made under the scheme has been described in the annual progress reports on the Sub-station. An up-to-date summary is however furnished in the following pages.

Collection and classification of the varieties grown in India.

[Item (1) of the programme of work].

Two hundred and ninety-four stocks of potatoes from different parts of India were collected by the Imperial Agricultural Research Institute in 1934-35 and planted at Pusa. This collection included both imported European varieties and the so-called *desi* varieties. A sample of each stock was also sent to Simla and planted there in the summer of 1935 and in subsequent seasons. Detailed notes on foliage, stem, flower and tuber characters were recorded and the leaf index of all the cultures determined by Salaman's method. In 1937-38 after the elimination of a large number of duplicates, about fifty varieties were selected for further study. The question of the identification of these varieties is being taken up at the Imperial Agricultural Research Institute with the co-operation of Dr. Salaman. The Simla Sub-station is studying the material with a view to classifying it with reference to the range of variability of the more important morphological and physiological factors.

A number of important European and American commercial varieties have also been under study and a few are considered to be promising material for use as parents for hybridization as they possess valuable economic characters. These promising varieties have already been employed in crosses and the progenies are under study. This will be referred to in a later section.

Study of the available South American material.

[Item (2) of the programme of work].

This material comprises South American and Central American varieties of both wild and cultivated potatoes, and also a large number by hybrids between certain of them.

(1) *Collection of varieties of S. tuberosum from Chile.*—Two consignments containing 133 samples were received from Dr. P. S. Hudson in November 1934 and May 1935 respectively. Another consignment of 19 samples was received from Dr. P. S. Hudson. After eliminating obvious duplicates, 173 varieties remained and these were under study with a view to discover forms which would be suitable either for direct cultivation in India or for use as parents for breeding purposes. The yield of some of the varieties was found to be quite good but in most cases the tubers were strongly coloured, tuberculated or otherwise undesirable from the commercial point of view; it is extremely unlikely that any of the varieties is suitable for direct cultivation.

Field observations were made regarding their resistance or susceptibility to Early Blight and Late Blight as well as to v rus diseases. Six varieties showed quite a high degree of resistance to natrual infection of Late Blight.

(2) *South American Species.*—Material of the following twenty* South and Central American wild and cultivated species is now available. This material was originally obtained either in the form of seed or as tubers through the courtesy of Dr. P. S. Hudson and Dr. R. N. Salaman, Director of Potato Virus Research Institute, Cambridge, and other Agricultural Botanists in Britain, America, Germany and Russia. The species under study are :—

1. *S. acaule*	11. *S. jamesii*
2. *S. Antipoviczii*	12. *S. leptostigma*
3. *S. araco papa*	13. *S. Maglia*
4. *S. Aya papa*	14. *S. neoantipoviczii*
5. *S. Caldasii glabrescens*	15. *S. otites*
6. *S. chacoense*	16. *S. polyadenium*
7. *S. Commersonii*	17. *S. phureja*
8. *S. curtilobum*	18. *S. Rybinii*
9. *S. demissum*	19. *S. stenotomum*
10. *S. Fendleri*	20. *S. subtilious*

In addition to the above, four Bolivian varieties received from Cambridge are also available.

Yield.—With the exception of three species, namely *S. andigenum*, *S. tuberosum* and *S. leptostigma*, all the other species have given extremely small yields which in some can be measured in ounces or fractions of an ounce. Most of the wild species yield extremely small tubers which are borne at the ends of very long stolons which may exceed four or five feet in length.

Photoperiodism.—Unlike *S. tuberosum* many of the South American species are short day plants, *i.e.*, they produce tubers only when they are planted under conditions of 9-10 hours of day-light. It is hoped that among these it may be possible to discover forms suitable for conditions in the plains of India where potatoes are grown during the winter season, *i.e.*, when short days conditions prevail. Some species like *S. demissum*, *S. Antipoviczii* and *S. neoantipoviczii* produce almost no tubers when planted under natural conditions in the field, but possess great vegetative vigour and flower profusely.

Preliminary studies on the photoperiodic reaction of *S. demissum* and S. *neoantipoviczii* were made during 1936-37. Short day conditions were provided to the plants growing in the field by covering individual plants with dark covers. No conclusive results could be obtained as the method of controlling day-light was not very satisfactory. A controlled illumination house has now been built and photoperiodism studies will be begun in 1939-40. Controlled illumination houses are necessary for the maintenance of those species which react adversely to long day conditions. In this connection it may be mentioned that at Simla most of the wild species have been yielding

*Material of S. *candelarianum*, *S. edinense* and *S. goniocalyx* was also received. The first named species was found to be wrongly named and other two did not produce any tubers and rotted away.

tubers only when a late sowing in pots or boxes is made. A great advantage in raising these species in pots and boxes is that it is easy to maintain the optimum amount of moisture and that the harvesting operations are greatly facilitated. Under field conditions it is often difficult to harvest the small and scattered tubers and there is also the great danger of tubers belonging to different cultures getting mixed up.

Resistance to Late Blight.—In the progress reports of 1936-37 and 1937-38 details regarding the relative resistance and susceptibility of wild and cultivated Solanum species were given. A detailed account of this was also given in a paper published in the Indian Journal of Agricultural Science in August 1937. The present situation is summarised below :—

1. *S. ajuscoense, S. demissum, S. neoantipoviczii* and *S. polyadenium* are immune to Late Blight (*Phytophthora infestans*) under field conditions.

2. *S. acaule-papa, S. Caldasii, S. chacoense, S. Commersonii, S. Fendleri, S. Jamesii, S. leptostigma, S. Maglia, S. stenotomum* and *S. subtilius* are susceptible in varying degrees.

Variations exist in the degree of susceptibility of the various varieties of *S. andigenum* and *S. tuberosum*, but almost all of them are quite highly susceptible. Only six varieties of *S. andigenum* showed a promising degree of resistance.

Resistance to frost.—Preliminary tests of the cold resistance of various species under field conditions were initiated in 1936-37 and are being continued. As the material in many species was extremely small, it was not possible to include many species in these tests and no definite results are yet available.

(3) *Interspecific hybrids* (received from abroad).

In all 78 hybrids, received mostly from Russia, have been studied. This material includes :—

1. Nine *andigenum-tuberosum* hybrids and one *S. tuberosum* × (*S. andigenum-tuberosum*) hybrid.
2. Ten *tuberosum-andigenum* hybrids.
3. Two *tuberosum-demissum* hybrids.
4. Six *curtilobum-tuberosum* hybrids and four *S. tuberosum* × (*S. curtilobum-tuberosum*) hybrids.
5. One *demissum-andigenum* hybrid.
6. Four *demissum-tuberosum* hybrids, 11 hybrids between (*S. demissum-tuberosum*) hybrid × [*S. tuberosum*, 22 hybrids between { [*demissum tuberosum*) hybrid × *S. tuberosum*] × *S. tuberosum* } × Bolivian variety and two (*demissum-tuberosum*) hybrids × Bolivian variety.

7. One *Antipoviczii-tuberosum* hybrid and three (*Antipoviczii-tuberosum*) hybrids × *S. tuberosum*.

8. One *Rybinii* × *Bukasovii* hybrid.

9. One (*Goniocalyx* × *Bukasovii*) hybrid × *S. Rybinii*.

10. One *S. Rybinii* × (*goniocalyx-Bukasovii*) hybrid.

Besides these nine unidentified hybrids are also available.

Information regarding the yielding capacity, tuber size and colour of all the hybrids is now available. Many of these yield well but are defective in respect of tuber size and shape.

Some information regarding their reaction to virus diseases and Late Blight for a large number of the older hybrids is available. In the Late Blight epidemic of 1936-37 three hybrids (*S. demissum* × *S. tuberosum*) No. 6, (*S. Antipovczii* × *S. tuberosum*) No. 2 and (*S. Antipoviczii*)× (*S. tuberosum*) × *S. tuberosum* No. 1, exhibited a very high degree of resistance. The yields of all the three hybrids were however very poor hardly exceeding 1 lb. per plant on the average. The tubers of *S. demissum* hybrids are small and constricted and at the ends of long and scattered stolons. The other two *Antipoviczii* hybrids have also very long stolons and the tubers are small and deep purple. The *demissum* hybrids has been utilized in crosses made with the object of evolving varieties resistant to Late Blight.

Preliminary tests for frost resistance revealed that *S. curtilobum* × *S. tuberosum* hybrid No. 5 possessed a considerable degree of frost resistance.

It is very likely that some of the more recently received hybrids may be found to possess resistance to Late Blight and other useful qualities. The studies are being continued.

Production of varieties with desirable characters such as immunity or high resistance to blight and virus diseases, etc.

(Item 3 of the programme of work).

1. *By selection from seedlings.*—In 1935 a large number of seedlings were raised at the Imperial Agricultural Research Institute at Pusa from true seeds (from naturally selfed berries) of two varieties, Pusa White and Coonoor White. While one or two of these are fairly satisfactory from the yield point of view under Pusa conditions they do not appear to possess any definite superiority over the existing varieties. It is doubtful whether any considerable advance is to be expected from this method, *i.e.*, by selection from seedlings raised from seeds of selfed berries.

2. *By hybridization.*—Both intervarietal and interspecific crosses have been attempted. The former may be expected to give quicker results but the solution of many of the more important problems of potato production probably lies in interspecific hybridization between the best of the present commercial varieties and South American species possessing valuable characters

such as high resistance to Late Blight, frost resistance, etc. In the breeding work being done under the scheme emphasis has accordingly been laid upon hybridization between selected varieties of *S. tuberosum* and the South American species.

INTERSPECIFIC HYBRIDIZATION.

(1) In relation to the problem of Late Blight.

The Late Blight epidemic of 1936-37 provided an opportunity to test the relative resistance of the different species and to choose suitable parents for hybridization. The crosses made and the subsequent work on them are briefly described below :

(*a*) Direct crosses with South American species.

As already mentioned some of the species proved immune to Late Blight under natural field conditions. *S. demissum* which showed complete immunity was used as one of the parents for crosses made for blight resistance work. This species was also found to possess a high degree of resistance to frost. The other parents used for crossing with *S. demissum* were two foreign commercial varieties, namely :—

1. Epicure: An early variety stated to possess a certain amount of resistance to Leaf Roll and Mosaic.
2. Katahdin : An American variety reputed to possess considerable resistance to mild mosaic and which yields a good crop of large sized tubers. It is a fertile variety and crosses with it are easy to make.

The crosses, Epicure × *S. demissum* and Katahdin × *S. demissum* were actually made in 1936-37 and the F_1s raised in 1937-38. The F_1 generation proved to be resistant to a mild epidemic of Late Blight in 1937-38. The F_1 plants however gave a very poor yield of tubers which were usually borne at the ends of long and scattered stolons. The Epicure-demissum hybrids was 'backcrossed' to Pusa White and 91 individuals raised in 1938-39. All the plants of the 'backcross' again yielded a very poor crop of tubers. Three plants have been selected for further back crossing to the *tuberosum* parent.

In the F_1 of the *S. demissum* × Katahdin cross only seven individuals survived and were raised to maturity. All the seven plants in F_1 proved to be resistant to Late Blight in 1937-38. This cross appears to be more promising than the former and backcrosses to Katahdin and crosses with a number of high yielding *S. andigenum-tuberosum* hybrids have been made in 1938-39. These will be grown in 1939-40.

(*b*) Crosses with imported interspecific hybrids.

Using the already available resistant hybrids as one of the parents for crossing was considered to be more desirable than starting extensive work with crosses made directly with resistance species. It obviously saves one or two years preliminary work which would otherwise have to be done.

In addition to a few other resistant hybrids two out of the three hybrids which proved to be immune to Late Blight in 1936-37 were used as parents

for such crosses. In the statements which follow, the details of the crosses under study and the year in which the F_1s were raised are given :—

1. *Crosses made in 1936-37 and F_1s raised in 1937-38.*

Serial No.	Details of cross.	No. of plants in F_1.	No. of plants selected in 1937-38.	No. of plants selected in 1938-39.	Remarks.
1	(*S. demissum* × *S. tuberosum*) hybrid No. Sl. C × Pusa White.	152	7	1	The selected hybrid is like Pusa White and has been sent to Pusa for multiplication. No back-crosses made.
2	(*S. demissum* × *S. tuberosum* 'Alma') hybrid No. 1 × Pusa White.	27	16	1	Yields were extremely poor and further back-crossing was stopped.
3	(*S. demissum* × *S. tuberosum* 'Alma') hybrid No. 1 × Coonoor White.	5	3	*Nil*	
4*	(*S. demissum* × *S. tuberosum* 'Gloriosa') hybrid 6 + Coonoor White.	22	12	12	Back crossed with Katahdin.
5*	(*S. Antipoviczii* × *S. tuberosum* 'Mirabilis') × *S. tuberosum* 'Mirabilis' hybrid No. 1 × Coonoor White.	8	1	1	
6*	(*S. Antipoviczii* × *S. tuberosum* 'Mirabilis') × *S. tuberosum* 'Mirabilis' × Katahdin.	2	2	2	Backcrossed with Katahdin.
		216	41	17	

*Crosses with immune hybrids.

2. *Crosses made in 1937-38 and F_1 raised in 1938-39.*

Serial No.	Details of cross.	No. of plants in F_1.	No. of plants selected for 1939-40.	Remarks.
1	(*S. demissum* × *S. tuberosum* 'Gloriosa') × Pusa White.	45	10	The yields of these were very unsatisfactory.
2	(*S. demissum* × *S. tuberosum* 'Gloriosa') × Cult. 324.	11	4	
3	(*S. demissum* × *S. tuberosum* 'Gloriosa') × Cult. 316.	12	7	Backcrossed with Cult. 328.
4	(*S. demissum* × *S. tuberosum* 'Gloriosa') × Cult. 327.	66	9	Backcrossed with Cult. 328 and (*S. antigenum-tuberosum*) hybrid No. 1.
5	(*S. demissum* × *S. tuberosum* 'Gloriosa') × Cult. 328.	223	38	Backcrossed with Cult. 328, (*S. andigenum-tuberosum*) hybrid No. 1 and (*S. curtilobum-tuberosum*) hybrid No. 5.
6	(*S. demissum* × *S. tuberosum* 'Gloriosa') × *S. andigenum-tuberosum* hydrid No. I.	283	20	Backcrossed with Cult. 328 and 316.
	Total ..	640	88	

(c) *Crosses with S. andigenum.*

These crosses were made with the object of generally improving the potato, including resistance to Late Blight attack. *S. andigenum* is believed to possess genes for high yield and also a certain amount of resistance to Late Blight. It further possesses tubers which have a long rest period and it is possible that from crosses with this species one may obtain commercial varieties with better keeping qualities.

A statement of the crosses made and the subsequent selection and crossing work is given immediately below:

1. *Crosses made in 1936-37 and F_1s raised in 1937-38.*

Serial No.	Details of cross.	No. of plants in F_1.	No. of plants selected in 1937-38.	No. of plants selected in 1938-39.	Remarks.
1	*S. andigenum No. 1* × Katahdin ..	170	34	9	Backcrossed with Cult. 328, 316, 325 and *S. andigenum* × *S. tuberosum*) hybrid No. 1.
2	*S. andigenum No. 10* × Katahdin ..	128	12	6	
3	*S. andigenum* No. 10 × Pusa White	118	7	7	
	Total ..	416	53	22	

2. *Crosses made in 1937-38 and F_1s raised in 1938-39.*

Serial No.	Details of cross.	No. of plants in F_1.	No. of plants selected in 1938-39.	Remarks.
1	*S. andigenum* No. 63 × Cult. 328	171	18	Backcrossed with Cult. 328.
2	Cult. 327 × *S. andigenum* No. 63	75	13	
	Total ..	246	31	

In 1937-38 a mild epidemic of Late Blight afforded an opportunity to select from among the F_1 progeny only those plants which showed a reasonable degree of resistance to Late Blight. The subsequent selections in 1938-39 were made on the basis of yield, tuber characters and resistance to virus diseases. It was not possible to study the behaviour of one of the seedlings to Late Blight in 1938-39 as the disease appeared only very late in season. The yields of some of the hybrids are very satisfactory but the tuber characters require considerable improvement.

It has not thus far been possible to test the resistance of potato cultures to infection by Late Blight under experimentally controlled conditions. But

the co-operation of the Mycological Section of the Imperial Agricultural Research Institute has been obtained and it is hoped thorough testing of the potato material will be possible in the near future.

(2) In relation to the problem of Early Blight.

Apart from recording the relative susceptibility and resistance of the available potato material to natural infection by Early Blight (*Alternaria Solani*) no special investigation has been possible.

(3) In relation to the problem of frost.

In many parts of India, especially in the North and North-Western regions a frost resistant variety would be extremely valuable.

A preliminary test for studying the cold resistance was initiated in 1936-37 and is being continued. For this study sowings late in the season are made and the reaction of varieties to frost which is common in Simla from towards the end of December is recorded. Laboratory tests with tubers could not be pursued on account of the lack of suitable equipment. From the preliminary observations made in 1937-38 the *Curtilobum-tuberosum* hybrid No. 5 showed a considerable resistance to frost and crosses with this hybrid as well as with *S. curtilobum* which is supposed to be a frost resistant species have been made in 1938-39 and the F_1 will be planted in 1939-40.

Attempts to cross *S. acaule*, which is another frost resistant species, with *S. tuberosum* were unsuccessful.

(4) In relation to the problem of virus diseases.

Notes on virus diseases have been taken every year both at the Imperial Agricultural Research Institute at Delhi and at Simla. Special care is being taken to isolate all the virus contaminated seedlings. At present a preliminary survey of the more important virus diseases is being done at the Imperial Agricultural Research Institute.

Virus free stocks of 31 important commercial English varieties were obtained from Dr. R. N. Salaman. A part of this material is being maintained under insect proof conditions and a part has been planted in the field to test the yielding capacity.

INTERVARIETAL HYBRIDIZATION (between varieties of *S. tuberosum*).

A number of imported commercial varieties of *S. tuberosum* combine good yielding capacity with other valuable characters. These have been under study at Simla and the most promising varieties have been used as parents for crossing with the South American species. A number of varietal crosses were

also made and the F_1 generation grown in 1938-39 and selections made as follows :—

Serial No.	Cross.	No. of plants sown.	No. of selections made.	Remarks.
1	Cult. 256 × Cult. 252	387	21	
2	Cult. 330 × Cult. 328	170	25	
3	Cult. 212 × Cult. 328	173	*Nil*	All the plants had very irregular and deep eyed tubers.
4	Cult. 254 × Cult. 328	137	11	
5	Cult. 155 × Cult. 328	877	70	
6	Cult. 316 × Cult. 328	218	15	
7	Cult. 254 × *Pusa White*	24	*Nil*	F_1 had very small tubers on long stolons.
8	Chilian tuberosum No. 90 × Cult. 328.	131	*Nil*	These crosses were made for fresh colour studies. F_1 gave very poor yields and long stolons. Cross No. 8 has been 'backcrossed' with Katahdin. It gave a crop with very healthy foliage, plants were very vigorous.
9	Chilian tuberosum No. 90 × Pusa White.	329	*Nil*	
	Total	..	142	

Although seedlings do not realize their full yielding capacity during their first year yet most of the selected seedlings have shown exceptionally good yields. The selected plants will be put to a preliminary yield test in 1939-40 and further selections made. Particular attention will be paid to their disease resistant qualities. It will be necessary to multiply the selected seedlings in 1940-41 after which it will be possible to send down these varieties to other centres for regular yield tests and final selection.

Study of flowering, fertility and sterility.

(Item 4 of the programme of work).

A detailed study of flowering, fertility and sterility was begun in 1936-37 and has been continued. The material for this study included all the domestic and Chilian varieties of *S. tuberosum* and all the varieties of *S. andigenum* as well as other Solanum species and hybrids. Much work has been done in this direction and information regarding the pollen fertility and sterility of almost all the available material is now known. A study of cross ability was also made.

A large amount of data has been gathered and is being analysed. This study is expected to be completed in 1939-40.

Study of the problem of dormancy and storage.

(Item 5 of the programme of work).

Dormancy.—Artificial methods of breeding the rest period of tubers by various chemical and physical treatments were investigated at Pusa. The results of these studies have been written up and published in the Indian Journal of Agricultural Science in 1938. Other methods of breaking dormancy which can be employed or on commercial scale are being experimented with at the Imperial Agricultural Research Institute.

This problem is also being tackled from another point of view. Some South American Solanum species like *S. phureja* are known to possess an extremely short rest period and crossing these with commercial varieties may result in the production of new varieties with short dormant periods which would prove useful in tracts where more than one crop is taken in a year.

Storage.—Much work on the storage problem has been already done in various Provinces and cold storage, etc., have been tried. It is not considered that further work on similar lines is likely to be fruitful. This problem therefore will be tackled by breeding methods, *i.e.*, by evolving varieties which possess a long rest period and would thereby possess better keeping qualities.

Preliminary work has indicated that there exist striking varietal differences with respect to keeping qualities. Further varieties which sprout earlier appear to rot quicker than the ones which have long rest periods. Crosses have already been made with *S. andigenum,* a species which possesses a very long period of tuber dormancy and these crosses may result in the evolution of varieties which would possess better keeping qualities. This work will be continued.

Genetical and miscellaneous studies.

(Item 6 of the programme of work).

The staff being fully occupied with the major items of the programme of work it has not been possible to pay much attention to subsidiary studies.

3. THE WORK PROPOSED TO BE DONE UNDER THE EXTENSION SCHEME.

1. *The collection of varieties of S. tuberosum from India and abroad will be maintained and studied with a view to determining the genetic variability within this important species.*

The study will be narrowed to include only those clones (about 50 in number) which have been found to be distinct, after the elimination of synonyms. Certain of the original stocks having died out, it is hoped to obtain fresh samples of these from the localities where they are grown.

This study is expected to be of value in indicating the range of characters available for future potato breeding work in India, and to indicate the most promising varieties for use as parents for crossing.

2. *The material of the potato species and of hybrids between these and Stubersoum will also be maintained and studied, especially in regard to photoperiodic reaction, resistance to Late Blight and Early Blight and to the more important virus diseases, and resistance to cold.*

While this is a vast field for work, the study proposed under this head is intended to include only those aspects of immediate interest for practical breeding. The genes which the potato species other than *S. tuberosum* possess and which it is desirable to transfer to *S. tuberosum* are comparatively few, the most important being those conditioning resistance to diseases and to frost. The work to be done under this item will be mainly to determine to what extent these very valuable characters are present in the material which is available. It is well known that varieties of the different species vary in the

extent to which they are resistant to disease, etc. Before breeding for disease resistance can be put on a systematic basis it is necessary to know which varieties of each species are resistant to the Indian strains of the fungi and viruses causing the more important diseases of the potato in India.

The reasons for selecting the particular characters mentioned above for study are briefly indicated below :—

Photoperiodic reaction.—In Europe and America, potatoes are mainly cultivated in the summer. In India however, in the plains, they are usually grown as a cold weather crop. It is therefore possible that some of the short-day forms may be found to be especially suitable for Indian conditions. It has to be remembered of course that the source of seed of potatoes grown in the plains is usually obtained from the hills, and to be successful new varieties should probably combine ability to grow and yield well both under hills and plains conditions.

Resistance to Late Blight.—Late Blight is a serious disease of the potato crop in some of the important potato growing regions in the hills of Northern India.

Resistance of potato varieties and hybrids to Late Blight has already been studied at Simla under conditions of natural infection. It is now proposed to repeat this under experimentally controlled conditions with the co-operation of the Imperial Mycologist.

Early Blight.—This disease is common both in the hills and plains. Pending the results of purely mycological studies in the Mycological Section of the Imperial Agricultural Research Institute, the work under this head will be limited to recording the resistance of potato varieties under field conditions. It will therefore be a continuation of work which is already in progress under the original scheme.

Virus diseases.—Although they are probably responsible for enormous losses annually to the potato crop, little is yet known about the particular virus disease occurring in India and their relative importance. The first step towards the solution of this problem is therefore a survey of the more important virus diseases occurring both in the hills and plains. This work will be done by the Imperial Agricultural Research Institute (a certain amount of data has been collected already), and for the present the work under the extension scheme will be limited to recording the natural infection under field conditions.

Later on the question of breeding virus disease resistant varieties by crossing with *S. Rybinii*, a species reputed to be resistant to virus diseases, will be considered. Material of this species has been recently received and its reaction to the Indian viruses will be watched with interest.

Resistance to cold.—Frost damage is a factor of some importance in Northern and Western India. Some of the South American species are reputed to be able to stand a fairly high degree of cold. This has been already studied to some extent under field conditions by means of special late sowings, and it is proposed to continue the study under more rigidly controlled conditions.

A few crosses with *S. curtilobum* (a cold resistant) variety have already been made. These will be studied. Attempts will also be made to cross *S. tuberosum* either directly or indirectly, with *S. acaule*, the most highly cold resistant S. American species.

3. *The breeding work already in progress (which has been described in the preceding pages) will be continued.*

Both selfing and back-crossing to the *tuberosum* parent will be done; it may be necessary to repeat this for several generations to eliminate undesirable characters such as long stolons, low yield, small and highly coloured tubers, etc.

The crosses will be selected from among the following on the basis of the results for 1939-40.

Demissum crosses—

(*a*) (Epicure × *S. demissum*) × Pusa White.

(*b*) (*S. Demissum* × Katahdin) × Katahdin.

(*c*) (*S. demissum* × *S. tuberosum* 'Gloriosa') × Coonoor White × Cult. 328.

(*d*) (*S. demissum* × *S. tuberosum* 'Gloriosa') × Cult. 316 × Cult. 328.

(*e*) (*S. demissum* × *S. tuberosum* 'Gloriosa') × Cult. 328 × Cult. 328.

(*f*) (*S. demissum* × *S. tuberosum* 'Gloriosa') × Cult. 327 × Cult. 328.

(*g*) (*S. demissum* × *S. tuberosum* 'Gloriosa') × Cult. 327 × (*S. andigenum* × *S. tuberosum* hybrid No. 1.

(*h*) *S. demissum* × *S. tuberosum* 'Gloriosa') × Cult. 328 × (*S. andigenum* × *S. tuberosum* hybrid No. 1.

(*i*) (*S. demissum* × *S. tuberosum* 'Gloriosa') × Cult. 328 × (*S. andigenum* × *S. tuberosum* hybrid No. 5.

(*j*) (*S. demissum* × *S. tuberosum* 'Gloriosa') × (*S. andigenum* × *S. tuberosum* hybrid No. 1) × Cult. 328.

(*k*) (*S. demissum* × *S. tuberosum* 'Gloriosa') × (*S. andigenum* × *S. tuberosum* hybrid No. 1) × Cult. 316.

Antipoviczii Cross—

(*a*) (*S. Antipoviczii* × *S. tuberosum* 'Mirabilis') × *S. tuberosum* 'Mirabilis' × Cult. 328.

(N.B.—The crosses are of interest mainly in connection with resistance to Late Blight Cult. 327 is however resistant to leaf-roll and Cult. 328 to the American mild mosaic.)

S. curtilobum is cold resistant.

Andigenum crosses—

(*a*) Cult. 316 × (*S. andigenum* No. 1 × Katahdin).

(*b*) Cult. 325 × (*S. andigenum* No. 1 × Katahdin).

(*c*) Cult. 325 × (*S. andigenum* No. 10 × Katahdin).

(*d*) (*S. curtilobum* × *S. tuberosum* hybrid No. 5) × (*S. andigenum* No. 1 × Katahdin).

(*e*) (*S. andigenum* No. 63 × Cult. 328) × Cult. 328.

(*f*) (S. andigenum No. 63 × Cult. 328) × (*S. c rtilobum* × *S. tuberosum* hybrid No. 5).

(*g*) Cult. 316 × *S. andigenum* No. 63.

S. andigenum is a cultivated species which resembles *S. tuberosum* in many respects. It is characterised by high yield and is also more resistant to Late Blight and to cold than *S. tuberosum*.

4. *Multiplication of seed and preliminary varietal trials of selected seedlings.*

Certain intervarietal crosses have been grown during the original scheme, these being crosses between varieties of *S. tuberosum* known to possess important characters of economic value. It is intended to conduct preliminary tests of the more promising ones, and to send the best of these to centres in the Provinces, for final selection. Two or three important Indian commercial varieties will be used as standards.

The following new crosses will also be grown:

(*a*) Cult. 324 × Cult. 328.

(*b*) Cult. 325 × Cult. 328.

(*c*) Cult. 328 × Cult. 328.

Cult. 324 is resistant to leaf-roll but the tubers are very irregular in shape.

Cult. 325 is resistant to mild mosaic and immune to latest moisca.

Cult. 327 is resistant to late blight but the tubers are not satisfactory.

Cult. 328 is a fertile variety which gives a good yield of large tubers which however rot quickly, *i.e.*, the keeping quality is poor.

The study of the keeping quality of potatoes in relation to storage and dormancy is now being done at the Imperial Agricultural Research Institute itself and work on this problem will not therefore be conducted at Simla.

5. *The new material which is being received as a result of the Empire Potato Expedition to South America will be grown and studied.*

The material being very valuable, part of it will be grown under short day conditions and under insect proof conditions; part of it will be planted in boxes and pots or in the field. As the material is being received practically directly the special characters of the species and varieties it contains will have to be determined before it can be used for breeding purposes.

4. Technical Programme of Work.

1. The study of the commercial varieties of *S. tuberosum* from India and abroad to elicit the range of characters available for breeding work.

2. The study of the South American and Central species and of hybrids between these and *S. tuberosum* in regard to photoperiodic reaction, resistance to Late Blight and Early Blight and to the more important virus diseases, and resistance to cold.

3. Continuation of the breeding work already in progress. This is especially directed towards the breeding of Late Blight resistant varieties but several of the parent stocks possess resistance to virus diseases and to cold as well. Both selfing and backcrossing to the *tuberosum* parent will be done.

4. Multiplication of seed and varietal trials of the most promising new varieties.

5. The study of the material being received from the Empire Potato Expedition to determine its value for breeding purposes.

Estimate of costs of the original scheme.

		Rs.
Non-recurring—		
(1) At Pusa 1—		
a	Insect-proof house	2,500
b	Pots	300
c	Wire baskets for storing potato samples	250
(2) At hill station—		
d	Land	Depends on site, can perhaps be rented.
e	Quarters for staff	(as above)
f	Bullock shed	(as above)
g	Laboratory and Office	10,000
h	Seed and Implement Godown	2,000
k	Fencing	2,000
l	Office furniture	500
m	Insect-proof house	6,000 (m and n together)
n	Controlled illumination house	
o	Laboratory apparatus (microscope, etc.)	1,500
p	Racks for storing potatoes	500
r	Wire baskets for keeping samples separate	250
s	Implements (ploughs, etc.)	300
t	Pots	300
x	Sprayers	200
y	Pollination bags	100
z	Gunny bags	50
q	Books ('Potato varieties' by Salaman, Fisher's Statistics, etc.).	100
v	Bullocks (2 pairs)	500
		27,350

Recurring—

At hill station—

Pay of Assistant at Rs. 150	1,800
Pay of Clerk and Store-keeper at Rs. 50	600
Pay of Fieldmen at Rs. 40	480
Pay of Mali at Rs. 25	300
Pay of peon at Rs. 15	180
Pay of chowkidar at Rs. 15	180
Labour	2,000
T. A. for Assistant, etc.	500
Chemicals	200
Manures	200
Feed and upkeep of bullocks	100
Seeds	100
Stationery, postage	150
Miscellaneous	200
Total	6,990

For 5 years 6,990 × 5 = 34,950.

Totals as finally sanctioned—

	Rs.
Non-recurring	(*a*) 47,900
Recurring for 5 years	(*b*) 39,030
Total	86,930

(*a*) Originally the non-recurring grant of the Scheme was estimated at Rs. 27,350 to which was to be later added the cost of buildings and land.

(*b*) Originally estimated at Rs. 34,950 and subsequently slightly increased.

5. *Details of staff, etc., and Estimate of Expenditure.*

It is convenient to present this under two heads, *viz.*, (*i*) Simla Sub-station, and (*ii*) Intermediate Sub-station.

(*i*) *Simla Sub-station*—

The following changes have been made from the original 5-years scheme.

Recurring Expenditure.—(*a*) In the original scheme a fixed pay was provided for most of the staff. In the present scheme the posts have been brought on to graded scales in conformity with those of the Imperial Agricultural Research Institute.

(*b*) Three new posts are proposed, namely, two assistants, one store-keeper one mali. These are necessary because the Sub-station is expected to receive a large quantity of valuable new material from the Empire Potato Expedition. There has also been a natural expansion of the work and the present staff would not be able to cope with any new addition of material.

(c) Provision has been made for Contributory Fund benefits to the staff.

(d) An increase has been made in the contingent grants in the light of the experience gained during the working of the first five years of the scheme.

Non-recurring expenditure.—The need for items 1—5 is evident. Regarding item 6 it is very desirable that the officer in charge of the Sub-station should be able to spend one summer abroad to see the latest methods of potato breeding, especially in regard to methods of testing for disease resistance.

	1940-41 1st year.	1941-42 2nd year.	1942-43 3rd year.	1943-44 4th year.	1944-45 5th year.	Total.
Recurring Charges.						
J. 5 (1) Pay of Officers 200—215—230 245—260	2,400	2,580	2,760	2,940	3,120	13,800
J. 5 (2) Pay of Establishment—						
2 Assistants 100—105—110—115—120	2,400	2,520	2,640	2,760	2,880	13,200
1 Clerk 50—52—54—56—58 ..	600	624	648	672	696	3,240
1 Fieldman 40—42½—45—47½—50	480	510	540	570	600	2,700
1 Storekeeper 40—42—44—46—48	480	604	528	552	576	2,640
2 Malis 20—20—23—23—26 ..	480	480	552	552	624	2,688
1 Peon Rs. 18 fixed	216	216	216	216	216	1,080
1 Chowkidar Rs. 18 fixed ..	216	216	216	216	216	1,080
J. 5 (3) Other Charges—						
C. P. Fund Contribution ..	300	319	338	356	375	1,688
Travelling Allowance	800	800	800	800	800	4,000
Labour	3,000	3,000	3,000	3,000	3,000	15,000
Equipment (apparatus, chemicals, manures, pots, etc.) ..	1,000	1,000	1,000	1,000	1,000	5,000
Miscellaneous (Stationery, Postage, House and Ground Taxes, repairs to buildings)	1,000	1,000	1,000	1,000	1,000	5,000
Total ..	13,372	13,769	14,238	14,634	15,103	71,116
Non-recurring for details, see the enclosed sheet ..	..	..	..	..		14,200
						85,316

J. 5 (3) Other Charges :—

Non-recurring.	Rs.
1. Glass house for conducting disease resistance tests	3,500
2. Providing Irrigation Distribution pipes in field	1,500
3. Bullock-shed	1,000
4. Repairs and alterations to buildings	2,500
5. Lease of additional area (5 acres) at Simla for multiplying seed potatoes ..	700
6. Superintendent's visit to the Potato Virus Research Institute, Cambridge, for training under Dr. R. N. Salaman (7 months including period of transit)	5,000
Total ..	14,200

Superintendent.—The original scale of pay of the Superintendent was Rs. 150—10—190. He will be due to draw Rs. 200 on 1st April 1940. It is proposed at this stage to give him gazetted rank and to place him with lower stage of the Class II time-scale of Rs. 200—15—350—20—650, in view of the the considerable responsibility which it attached to the post. The responsibility of the Superintendent increased with the transfer of the wheat breeding

work to the Potato station and will further be increased by the opening of the proposed intermediate sub-station in the foot-hills. The advantage of giving him gazetted rank will be to relieve the Imperial Economic Botanist of much of the routine work particularly relating to the accounts of the Sub-station.

Assistants.—In view of expansion and the great increase in the work on addition of one more assistant is proposed. The one assistant already in the scheme is fully engaged in the general work of sowing, hervesting, storage, transplanting, etc. The experimental work is therefore mainly left over for the Superintendent who however cannot devote his full time to research as he has to supervise other work as well as to attend to office accounts work. Moreover a considerable amount of new South American material will be arriving as a result of the Empire Potato Expedition. This requires great care and attention involving a considerable amount of new work. The necessity of strengthening the staff is therefore obvious.

Ministerial Staff.—The Potato Sub-station has at present only one clerk to maintian accounts of both expenditure and stores and to do typing and other clerical work. This work has considerably increased with the transfer of wheat Breeding to the Potato Station, and will further expand when an intermediate hill station is started. It is therefore proposed to have two men, a clerk and a store-keeper. The scale of pay for the latter will be the same as the revised scale for post of clerks at this Institute, *viz.*, Rs. 40—2—72 (E. B.)—Rs. 76—3—100 but the former will have to be given a higher start as his duties will be more responsible and experience has shown that it is not possible to get and retain a suitable man for this kind of work on Rs. 40 for Simla. A scale of Rs. 50—2—72 (E. B.)—Rs. 76—3—100 is therefore proposed for the clerk, which differs from the institute scale only in having a higher minimum. The need for this is evident.

(*ii*) *Intermediate Station.*—

The present area of cultivable land at the Potato Breeding Station at Simla is just enough for conducting the breeding work. Land is not available for multiplying promising varieties or for conducting varietal trials. No provision was made for this in the original scheme as it was not expected that within the first five years varieties suitable for multiplication and trial would become available. This stage will however have been reached at the time the extension scheme comes into operation, and it is necessary to provide additional area for the purpose.

It is however desirable that this additional area should be provided at a place where the growing season differs from Simla in order that the difficulty occasioned by the rest period of potato tubers may be overcome. Experience has shown that the tubers from the main harvest at Simla which is completed in September cannot be used for planting the *rabi* potato crop in the plains because the tubers are dormant and require a rest period of 2-3 months before sprouting. If however the intermediate station is located in the lower hills where potatoes can be planted earlier in the year and harvested by about July, this difficulty will be overcome, and breeding work will also be expedited.

The programme of work of the intermediate station would be :—

(1) The multiplication of promising varieties (initial material to be supplied from the Simla Sub-station).

(2) Preliminary trials of the more promising varieties with a view to discovering varieties suitable for testing out in the Provinces.

(3) The storage of seed tubers of varieties selected for distribution to the Provinces. Every effort will be made to keep the material virus free. This will necessitate the periodical spraying of the crop against suspected insect vectors of potato viruses and the through rogueing of diseased plants.

A site for the intermediate station has not yet beeu selected but it is believed that a place such as Jeolikote in the Nainital foothills would be suitable. The estimates of cost of land, etc., cannot be given with any definiteness pending the selection of a suitable site. As finding a suitable site means visiting a nunber of places in the lower hills and consequent expenditure of time and money, the approval of the Council to the principle of having an intermediate station is sought in the first instance. If approval is granted definite estimates can be submitted in about a year's time. In the meantime, during 1940-41, it is proposed to lease a few acres of land near the Potato Station at Simla for multiplication and preliminary varietal trials. This is being provided for as non-recurring expenditure under the main Sub-station.

ANNEXURE II.

COPY OF A NOTE, DATED THE 14TH JUNE 1939, ON POTATO BREEDING SUB-STATION FOR NORTHERN INDIA (SIMLA)—PROPOSALS FOR EXTENSION OF THE SCHEME BY THE AGRICULTURAL COMMISSIONER WITH THE GOVERNMENT OF INDIA, IMPERIAL COUNCIL OF AGRICULTURAL RESEARCH.

The *total* amount asked for the five years' extension of this scheme does not differ very greatly from the amount sanctioned for the five years' period which is just ending. *But* the expenditure in the first five years included a very large amount for non-recurring expenditure which does not require to be (and has not been) repeated in the proposals for the extension.

The *recurring* expenditure, however, proposed for the five years period is no less than Rs. 34,966 in excess of the recurring expenditure sanctioned for the first five year period. How this excess is composed of will appear from the enclosed statement.

The work is definitely assuming more importance both as regards the material with which it is now working and the actual physical amount of work which is required. I have no objection to making the Superintendent a class II gazetted officer. In fact, I think the importance and responsibilities of the work demand this. I am, however, doubtful whether he should have two Assistants but would be agreeable to one on the scale mentioned. The other increases with regard to personnel are almost entirely due to increments, with the exception of one additional mali to which appointment I have no objection. I am not inclined to increase the travelling allowance nor to agree to spending Rs. 5,000 on sending the Superintendent to Cambridge for seven months. I think that increased expenditure on the headings "Labour", "Equipment" and "Miscellaneous" needs to be justified by a detailed statement before we can accept it.

Head.	Extension scheme.	Original Scheme.	Variation (increase).	Remarks.
1 Superintendent (*formerly* Assistant).	200—15—350—20—650 (Start 200). Class II Gazetted post.	150—10—190	+3,600	In view of the considerable responsibility attached to the post, increased by the transfer of wheat breeding work to the Potato Station, and the proposed intermediate station, and to relieve the Imperial Economic Botanist of routine work relating to accounts, it is proposed to give the Superintendent a gazetted rank on class II scale, Imperial Agricultural Research Institute.
2 Two Assistants ..	100—5—120 ..	..	+13,200	In view of the expansion and great increase in the work of the station, the Superintendent is not able to devote his full attention to research; he has to supervise other work, and accounts. Great care and attention will also be necessary because of the fresh material from S. America.
3 Clerk	50—2—72 ..	50	+240	Typing and other clerical work has increased considerably since the transfer of the wheat breeding station, and will further increase when the intermediate station is started.
4 Store-keeper	40—2—72 ..	..	+2,640	
5 Fieldman	40—5/2—60 ..	40	+300	
6 Malis	2 on 20—20—23—23—26.	1 on 25	+1,188	Because of material expected from the Empire Potato Expedition.
7 Peon	18	15	+180	
8 Chowkidar	18	15	+180	
9. *Other Charges*—				
(1) Contributory Provident Fund Contribution.	Rs. 1,688 for five years	..	+1,688	
(2) Travelling allowance ..	Rs. 800 per annum	Rs. 500 per annum.	+1,500	All these items have been increased in the light of the experience gained during the first five years of the scheme.
(3) Labour	Rs. 3,000 per annum	Rs. 2,000 per annum.	+5,000	
(4) Equipment (Chemicals, manure, seeds etc.).	Rs. 1,000 per annum	Rs. 600 per annum.	+2,000	
(5) Miscellaneous (Stationery, postage, house-taxes, repairs to buildings, etc.	Rs. 1,000 per annum	Rs. 350 per annum.	+3,250	

ANNEXURE III.

COPY OF LETTER No. 6147, DATED THE 17TH AUGUST 1939, FROM THE DIRECTOR, IMPERIAL AGRICULTURAL RESEARCH INSTITUTE.

Potato Breeding Sub-station, Simla—Proposal for the extension of the Scheme from April 1940.

With reference to Mr. Hardman's letter No. F. 40-2/39-A., dated the 12th July 1939, I have the honour to submit herewith my remarks on the Agricultural Commissioner's note dated 14th June 1939 regarding the abovementioned proposal.

Further details of the provisions proposed under "Labour", "Equipment" aud "Miscellaneous" in the extension Scheme are also enclosed.

Enclosures :—Director's remarks on Potato extension scheme.
Details of provisions for labour, etc.

Remarks on the Agricultural Commissioner's note, dated 14th June, 1939, regarding the proposal for the extension of the Potato Breeding Scheme at Simla.

Deputation of the Superintendent for training abroad.—After further consideration, I agree with the Agricultural Commissioner that it is not necessary to send the Superintendent for training abroad. The training may be useful but it is not essential.

Gazetted rank to the Superintendent.—Since the submission of the extension scheme, I have revised my views regarding a gazetted rank for the Superintendent. I do not consider it advisable at present to decentralise financial and administrative control over the Sub-station which must necessarily follow the bestowal of a gazetted rank. I therefore propose that the Superintendent should be put on the usual subordinate scale (Rs. 150—10—250) and be given a duty allowance of Rs. 25 per month for the additional responsibility.

Necessity for an extra Assistant.—As a matter of fact we have asked for only one extra assistant in the extension scheme in addition to the one already employed under the scheme.

Although no provision for an assistant was made in the original scheme, it was soon felt that the Superintendent alone could not cope with both administrative and scientific work, and a post of assistant was sanctioned in 1936. In the extension scheme, this post has been brought on to the usual incremental scale and another post has been proposed for the following reasons :—

The assistant already in the scheme is fully engaged in the general work maintaining the numerous cultures and sowing harvesting, and transplanting and storage operations connected therewith. The experimental work is therefore entirely left over to the Superintendent who however has to look after administration, accounts and other routine work and cannot find sufficient time for research work. In view of the natural expansion of the work and of the arrival of a considerable amount of new material as a result of the Empire Potato Expedition, which requires great care and attention, the provision of one more assistant is absolutely necessary. In potato work it is necessary to grow and study thousands of seedlings in order to be reasonably sure of success. An adequate staff is therefore essential for the success of the scheme.

T. A.—Under this item Rs. 300 have been proposed in excess of what was provided in the original Scheme. This is due to the fact that the Superintendent will be entitled to II class T. A. when he will draw more than Rs. 200 as his pay. The proposed grant is not therefore in any way more than what will be actually required.

Labour.—With the expansion of the work the labour requirements will also be increased. The amount proposed is based on the experience gained during the last four years. The details are given in the enclosed statement (Enclosure I).

Equipment.—The proposed amount is based on the experience gained during the present scheme. The details are furnished in Enclosure II.

Miscellaneous.—The Sub-station had no buildings of its own at the time the scheme came into operation and provision for ground, house and water taxes, etc., was not made in the original scheme. As now the Sub-station has its own laboratory, godowns, etc., it is necessary to provide funds for repairs and upkeep and for payment of taxes.

A statement showing the details is attached (Enclosure III).

In view of the above proposals, the estimate of expenditure for the 5-year extension period will require a slight revision. I enclose herewith a revised estimate which may be substituted for the one sent previously.

(Sd.) B. VISWA NATH,
Director.

Revised estimates of expenditure for Potato-breeding Scheme for the 5-year extension period.

Pay of Establishment.	1940-41.	1941-42.	1942-43. *Recurring.*	1943-44.	1944-45.	Total.
	Rs.	Rs.	Rs.	Rs.	Rs.	Rs.
1 Superintendent (150—10—250) +25 D. A.	2,700	2,820	2,940	3,060	3,180	14,700
2 Assistants (100—5—150) ..	2,400	2,520	2,640	2,760	2,880	13,200
1 Clerk (50—2—72)	600	624	648	672	696	3,240
1 Fieldman (40—2½—70)	480	510	540	570	600	2,700
1 Storekeeper (40—2—70)	480	504	528	552	576	2,640
2 Malis (20—3/2—26)	480	480	552	552	624	2,688
1 Peon (18)	216	216	216	216	216	1,080
1 Chowkidar (18)	216	216	216	216	216	1,080
Leave Salary	470	570	570	570	570	2,750
Contributory Provident Fund ..	300	319	338	356	375	1,688
Other Charges.						
T. A.	800	800	800	800	800	4,000
Labour	3,000	3,000	3,000	3,000	3,000	15,000
Equipment (Apparatus, Chemicals, etc.)	1,000	1,000	1,000	1,000	1,000	5,000
Miscellaneous	1,000	1,000	1,000	1,000	1,000	5,000
	14,142	14,570	14,988	15,324	15,733	74,766

Non-recurring.	Rs.
Glass House for conducting disease resisting tests	3,500
Irrigation distribution pipes	1,500
Bullock Shed	1,000
Repairs and alterations to buildings	2,500
Lease of acres of land at Simla for multiplying seed potatoes	700
	9,200
GRAND TOTAL ..	83,966
or say ..	84,000

Detailed statement of requirements under the Sub-heads.

ENCLOSURE I.

I.—Labour.

Months.	No. of men required per month.	Amount* required. Rs.	A.	P.	Remarks.
January	8	120	0	0	Labour required for storage and general work, *e.g.*, ploughing manuring the fields.
February	8	120	0	0	
March	20	300	0	0	During this month the preparation and lay-out of fields are in progress. Early plantings are also made.
April	24	360	0	0	Busy season. Sowing, cultivation, weeding applying fertiliser, 'ridging up' repairing retaining walls and bunds and harvesting are done in these months. In addition to these, a very large number of pot sowings, etc., have to be made.
May	24	360	0	0	
June	24	360	0	0	
July	24	360	0	0	
August	24	360	0	0	
September	16	240	0	0	Labour engaged partly in harvesting late cultures species, etc., and partly in storage work.
October	16	240	0	0	
November	8	120	0	0	Labour required for storage and other general field work.
December	8	0	0	0	
Total ..		3,060	0	0	
Say ..		3,000	0	0	

*The rate of labour varies from 7 to 10 annas per day depending whether it is skilled or unskilled. The above calculations are based on average of annas eight per day per coolie, each month being reckoned as 30 days.

ENCLOSURE II.

	Rs.	A.	P.
Equipment—			
1. Chemicals	100	0	0
2. Apparatus .. .. (petridishes, flasks, filter paper, slides, cover slips, etc.).	100	0	0
3. Spray materials .. .. (Copper sulphate, lime, Nicotine sulphate paris-green, etc.).	150	0	0
4. Manure .. .. (farmyard and fertilizers).	200	0	0
5. Seeds	50	0	0
6. Field requirements—			
(*a*) bags, cloth and muslin .. .. .. (for storage and protection of berries, etc.) (*b*) Gunny bags, etc.	75	0	0
(*c*) Crossing and selfing equipment (labels, manila bags, copper wire, etc.).	100	0	0
(*d*) Implements	75	0	0
(*e*) Miscellaneous	150	0	0
Total ..	1,000	0	0

ENCLOSURE III.

	Rs.	A.	P.
Miscellaneous—			
1. Ground, house, water taxes, etc.	200	0	0
2. Annual repairs to buildings, etc. .. .. .. (Laboratory, residential quarter on controlled illumination and insect proof houses, irrigation equipment, fencing, etc.).	300	0	0
3. Telephone charges	200	0	0
4. Stationery and postage	150	0	0
5. Feed and upkeep of bullocks	150	0	0
Total ..	1,000	0	0

APPENDIX XXXIX.

Note on Subject No. 19 (b) :—*Proposal for the Renewal of the Scheme for Research into the systematic cultivation of Medicinal Plants and the study of food poisons under Col. Chopra for a further period of three years at a cost of Rs. 51,873.*

In July 1932 the Advisory Board approved of a scheme for research into the systematic cultivation of medicinal plants and the study of food poisons in India by Bt.-Col. R. N. Chopra, at a cost of Rs. 62,860 spread over five years (*vide* pages 31 to 33, 43, 309 to 324, 437 to 438 of the printed proceedings). This scheme was sanctioned by the Governing Body in October 1932 and was initiated in April 1935. Subsequently in 1936 Col. Chopra applied for an additional grant of Rs. 13,200 spread over three years for expediting the work on the main scheme, the preparation of a detailed and illustrated glossary of indigenous drugs in India and the establishment of a herbarium of medicinal plants. The Advisory Board approved of this proposal at its meeting in January 1937 (*vide* pages 35, 242, 249 to 255 of the printed proceedings) and funds were allotted in March 1937. Thus, both the main and the supplementary schemes are due to terminate in March 1940.

2. Col. Chopra has now applied for renewal of the scheme on its existing basis for a further period of three years at a cost of Rs. 51,873 (Annexure). A saving of Rs. 3,000 is anticipated from the present scheme.

3. The proposals are for the consideration of the Advisory Board. The progress report on the working of the scheme during 1938-39 is being submitted to the Board separately.

ANNEXURE.

LETTER FROM BT.-COL. R. N. CHOPRA, C.I.E., K.H.P., I.M.S., DIRECTOR AND IN CHARGE MEDICINAL PLANTS AND FOOD POISONS INQUIRY, SCHOOL OF TROPICAL MEDICINE, CALCUTTA, NO. 812, DATED THE 11TH MAY 1939.

I have the honour to put before you a scheme for the extension of the Medicinal Plants and Food Poisons Inquiry financed by the Imperial Council of Agricultural Research, for a further period of three years from the expiry of its present term. In this connection reference is invited to the original scheme as sanctioned by the Council and the Additional Scheme, sent on 4th April 1936 which was also sanctioned.

1. The progress reports of the working of this Inquiry during the last four years show that work of great utility has been done. The monograph on the 'Poisonous Plants of India' has been completed and is now ready for press. This does not of course mean that all work in this connection has been done. All it means is that important basic work has been completed and the work so far done in the School of Tropical Medicine and elsewhere has been recorded. Any one can now take up investigation of the individual poisonous plants without difficulty. With the completion of this work one of the very important aspect of the Inquiry has been dealt with.

2. Valuable work has been done in connection with the ætiology of epidemic dropsy and with the discovery of *Argemone mexicana* Linn. seeds and oil as adulterant to mustard seeds and oil we are definitely one step nearer towards the solution of this important problem. Other food poisons both for man and animals are being investigated.

3. This Inquiry has been tendering useful advice in furthering the cultivation of medicinal plants in India and has carried out work of practical importance in this connection, *e.g.*, pyrethrum cultivation. Plants take some time to grow and those that are now being cultivated require expert guidance by way of chemical analyses, biological tests, etc., which this Inquiry is providing.

4. Considerable progress has been made in connection with the collection of data with regard to the distribution of medicinal plants in India, which will have an important bearing on working out a comprehensive scheme for encouraging their cultivation on a commercial scale and also for utilising those growing in a state of nature. This work will be of great value to the agriculturists. The work under this head is very extensive and laborious and it was to expedite this that the Imperial Council sanctioned the additional scheme. Special efforts have, therefore, been made to expedite this work. Most of the herbaria all over the country have been consulted and distribution notes from several lakhs of herbarium sheets have been taken. The vast literature on the subject, both of Indian and World origin is being consulted. In addition, copious field notes and first hand information by actual observations in different parts of the country are being gathered and personal contact with workers all over India has been established. In this way, a very large amount of information has been collected, but a lot of more work has to be done before this work can be brought to a logical conclusion. This investigation has gained additional importance since it will also be useful from point of view of distrihution of poisonous plants in grass-lands and other localities which are a source of menace to livestock.

5. The herbarium now represents about two thirds of the total species of known medicinal and poisonous plants in India. It is a matter of satisfaction to note that it is already becoming known in the country for its authentically named specimens and it will be a great pity if this valnable collection started eight years ago is not completed. It has been agreed that of the two complete sets of sheets one be left at the School of Tropical Medicine and the other sent to the Forest Research Institute, Dehra Dun. This will increase the scope of its availability and chances of perpetual maintenance.

6. Considerable progreess has been made in the preparation of the '*Glossary of Medicinal Plants*' but more work and time is essential to complete this extensive work which will be of practical utility to the agriculturists. The work in this connection is dependent to a large extent on items mentioned above under 4 and 5. This glossary when published will contain information regarding the habitat of the medicinal and poisonous plants on a scale not hitherto attempted in the literature, their detailed distribution in nature, cultivation and essentials for successful cultivation, uses, active principles and reference to the latest literature. It will, in short, give an accurate and up-to-date account of their scientific and economic aspects which are of value in determining the extent to which medicinal plants can be brought under cultivation.

This stock-taking, as it were, of the resources of Indian medicinal and poisonous plants will be very valuable from the scientific and utilitarian points of view to the agriculturists and the manufacturers.

7. Sir John Russell in his " Report on the work of the Imperial Council of Agricultural Research in applying science to crop production in India " appreciated the work that was then being done by the inquiry and wrote ' the work should certainly be continued'. In this connection reference is also invited to Sir John's remarks on page 159 (paras. 2, 3 and 4) and page 196 (para. 5) of the report. Much has been accomplished since then and no effort has been spared to expedite the extensive work taken up four years ago. If extension is granted the different aspects of the Inquiry will be brought to a logical conclusion.

It is proposed to continue the present staff for the period of extension applied for and details of the expenditure involved are given below. There will be a saving of about three thousand rupees from the present grant. The pay and increments of the staff are determined by the present arrangements and the dates of their joining the Inquiry. In case any member of the staff leaves during this period the fresh incumbent will start at the minimum pay of the post as originally decided. The proposed budget for the artists is less than sanctioned at present as a lot of work has already been done and this work will be entirely stopped in the third year. The amount asked for under T. A. is also less and during the third year the staff will mostly be at the headquarters for writing up the results of their investigations. The amount under chemicals and contingencies is likewise progressively decreasing.

Details of proposed budget for the extension of the Inquiry.

	Rs.
1st year (6th year of the Inquiry)—	
Botanist @ Rs. 350 p. m.	4,200
Experimental Assistant @ Rs. 250 p. m.	3,000
Chemist @ Rs. 125 p. m.	1,500
Two Assistant Botanists @ Rs. 125 p. m. each ..	3,000
Typist @ Rs. 55 p. m.	660
Lab. Asstt. No. 1 @ Rs. 35 p. m.	420
Lab. Asstt. No. 2 @ Rs. 30 p. m.	360
Lab. Asstt. No. 3 @ Rs. 30 p. m.	360
Sweeper @ Rs. 18 p. m.	216
T. A.	2,000
Artists (piece-work)	1,000
Chemicals and contingencies	1,000
	17,716

Details of proposed budget for the extension of the Inquiry.

2nd year (7th year of the Inquiry)—	Rs.
Botanist @ Rs. 375 p. m.	4,500
Experimental Asstt. @ Rs. 275 p. m...	3,300
Chemist @ Rs. 125 p. m. upto September and @ Rs. 150 p.m. October onwards	1,650
Two Asstt. Botanists—	
No. 1 @ Rs. 125 p. m. upto September, and @ Rs. 150 p. m. October onwards .. .. ; No. 2 @ Rs. 125 p. m. upto November, and @ Rs. 150 p. m. December onwards ..	3,250
Typist @ Rs. 55 p.m. upto December and @ Rs. 60 p. m. January onwards	675
Lab. Asstt. No. 1 @ Rs. 40 p. m.	480
Lab. Asstt. No. 2 @ Rs. 35 p. m.	420
Lab. Asstt. No. 3 @ Rs. 30 p. m.	360
Sweeper @ Rs. 18 p. m.	216
T. A.	1,500
Artists (piece-work)	500
Chemicals and contingencies	600
	17,451

3rd year (8th year of the Inquiry)—	Rs.
Botanist @ Rs. 375 p. m.	4,500
Experimental Asstt. @ Rs. 275 p.m.	3,300
Chemist @ Rs. 150 p. m.	1,800
Two Asstt. Botanists @ Rs. 150 p.m. each	3,600
Typist @ Rs. 60 p. m.	720
Lab. Asstt. No. 1 @ Rs. 40 p.m.	480
Lab. Asstt. No. 2 @ Rs. 35 p. m.	420
Lab. Asstt. No. 3 @ Rs. 35 p. m.	420
Sweeper @ Rs. 18 p. m.	216
T. A.	750
Chemicals and contingencies	500
	16,706

Total sum required for 3 years .. .. .. Rs. 51,873

Rupees fifty-one thousand and eight hundred and seventy-three only.

APPENDIX XL.

Note on Subject No. 19 (c) :—Proposals for the extension of the sunn-hemp scheme, Madras for a period of three years at a cost of Rs. 1,500.

At its meeting held in September 1934, the Advisory Board approved of three schemes of research on sunn-hemp from the provinces of Bombay, Madras and the Central Provinces (*vide* pages 46, 476 to 495 of the proceedings). The Madras scheme was for a period of three years at a cost of Rs. 1,500. The Governing Body sanctioned the schemes in January 1935. The scheme was initiated on the 8th April 1937 and is, therefore, due to terminate on the 7th April 1940.

2. The Madras Government have now applied for an extension of the existing scheme for a further period of three years at a cost of Rs. 1,500 (Annexure). Receipts to the extent of Rs. 150 are anticipated from the scheme.

3. There are slight variations from the original scheme, in the proposals for extension :—

	New Scheme. Rs.	Original Scheme. Rs.	Change. Rs.
1. Cost of cultivation	Rs. 200 per annum. (4 acres to be cultivated).	Rs. 165 per annum. (Only 3 acres were cultivated).	+35
2. Contingencies	Rs. 36 per annum	Rs. 20 per annum.	+16

The proposals are for the consideration of the Advisory Board.

ANNEXURE.

PROPOSALS FOR AN EXTENDED SCHEME OF EXPERIMENTS ON SUNN-HEMP FIBRE STUDIES AT THE AGRICULTURAL RESEARCH STATION, SAMALKOT.

In July 1936 the Imperial Council of Agricultural Research sanctioned a small scheme at an estimated cost of Rs. 1,600 spread over a period of three years for ascertaining the possibilities of improving the quantity and quality of sunn-hemp fibre in the Madras Presidency. The scheme commenced in April 1937 at the Agricultural Research Station, Samalkot, and the following are the tentative results so far obtained :—

(1) *Varietal tests.*—The ten most important varieties of sunn-hemp in the province, *viz.*, Dummagudem, Samalkot, Nellore, Rasipuram. Tirutturaipundi. Tenkasi, Tadapalligudem, Rajahmundry, Vinukonda and Bezwada, were compared with Dummagudem as control for vigour of plant growth and the yield and quality of fibre. The results of the two years indicate that Dummagudem, Tadepalligudem, Nellore, and Samalkot varieties are more promising than the rest. They are all medium duration varieties. Early varieties are low yielders while the quality of fibre obtained from late varieties is poor.

2. *Seed rate.*—With a view to ascertain the normal seed rate which would give the highest yield and best quality of fibre, all the varieties were tested with seed rate at 50 lb., 75 lb. and 100 lb. per acre. The seed rate at 50 lb. per acre has given the best results but indications are not wanting that even with lower seed rate it is possible to get satisfactory results.

3. *Effect of manure.*—Nitrogen and phosphoric acid both in combination and singly and also in different doses were compared with "no manure" over a basal dressing of farm yard manure at 5 tons per acre. The indication obtained is that the extra yield of fibre from the manured plots may not cover the cost of manure.

4. *Time of harvest.*—The quality and quantity of fibre were tested by harvesting tbe crop in four different stages of growth, *viz.*, at the time of flower formation, full bloom, pod formation and seed maturity. Best results were obtained when the crop was cut at the stage of flower formation.

5. *Effect of drying and not drying the stalks before retting.*—The stalks were dried for one day, two days, three days, one month, two months and three months, after harvest and before retting. The quality of fibre was the best when the stalks were retted green two or three days after retting.

6. *Retting.*—The stalks were retted in clean as well as muddy water both still and running. The results show that whether water was muddy or clean, retting was quicker in still water than in running water and quickest in still muddy water. Fibre from clean water is cleaner and whiter. The cleanliness of fibre improves when stalks are beaten with wooden mallets and fibre is combed. But about 25 per cent. of fibre goes to waste besides small bits of wooly matter sticking on to it firmly.

7. *Bleaching.*—Bleaching powder, acidified potassium permanganate with sodium disulphate, formaline and oxalic acid, were tried for bleaching the fibre. Best results were obtained with bleaching powder as powder as far as bleaching was concerned but the indications show that it affects the fibre strength. Better results were obtained when the stalks were properly retted and the fibre dried thoroughly in the scorching sun.

8. *Floral biology.*—Artificial pollination according to Uppal's method gave a setting percentage of 10 to 12, but more experiments on floral biology are required to determine the conditions necessary to give the optimum success in seed setting.

The experiments on sunn-hemp at the Samalkot farm above mentioned have yielded useful results and it will be worth while continuing even for a period of three more years in order to complete the work already started and to place the results in a form suitable for immediate economic application. I therefore suggest the following scheme ; giving in broad outline the trials to be conducted and their results.

The scheme shall comprise the following experiments, *viz.* :—

(1) *Trial of varieties.*—A number of varieties shall be tried with a view to evolving a type giving at least 750 lb. per acre of retted fibre. As suggested by the Statistician to

the Imperial Council of Agricultural Research, the trials will be in one cent plots limited to ten varieties at a time. Single plant selections will also be made of promising plants from reported varieties from such localities as Bellary, Dummagudem, etc.

(2) *Time of sowing experiments.*—The object of these trials shall be to find the optimum period of sowing in the season June to August. Sowings will be made in the 1st and 15th of each of the above months June, July and August and the plots replicated six times in randomized blocks.

(3) *Seed rate experiments.*—This experiment shall be designed to investigate the possibilities of economizing the seed rate which is usually from 50 to 100 lb. per acre. Experiments shall be conducted with seed rates of 30, 40 and 50 lb. per acre on the most important economic types, Dummagudem and Samalkot; in replicated plots in order to determine the best seed rate to use from the point of view of yield of fibre.

(4) *Retting experiments.*—The object of the experiments shall be to determine the conditions necessary to give a white colour to the retted fibre and compare the quality. The experiment shall be designed to test the effects of varying depth of water in retting, of varying temperature of water and finally of sweating the stalks of sunn-hemp.

(5) *Flower biology studies.*—In these experiments, a study will be made of the periods of opening of flower and dehiscence of anthers, and methods of artificial pollination tried to give a good setting of seeds to flowers.

Budget.

The expenditure involving in the Scheme will be as follows :—

Details of expenditure for one year.	Rs.
1. Wages of maistry at Rs. 22 per mensem ..	264
2. Cultivation and retting expenses 4 acres of sunn-hemp at Rs. 50 per acre ..	200
3. Contingencies	36
Total ..	500
Expenditure for three years	1,500

Receipts—

For three years at the rate of Rs. 50 per annum 150

APPENDIX XLI.

Note on Subject No. 19 (d) :—Scheme for the extension of the Botanical Sub-Station, at Pusa for a period of five years from the 1st October 1940 at a cost of Rs. 1,63,260 (Rs. 2,000 non-recurring).

An application received from the Director, Imperial Agricultural Research Institute (through the Government of India, Department of Education, Health and Lands), for the continuance of the grant for the Botanical Sub-Station at Pusa for a period of five years from the 1st October 1940 is appended (Annexures I and II). The details of the cost of extension are given at the end of the scheme. The proposal involves a non-recurring grant of Rs. 2,000 for purchase of draught and transport animals to replace old ones and a recurring grant of Rs. 1,61,260. Variations from existing scheme are mainly as *follows* :—

	Rs.
Leave Salary	5,000
Contributory Provident Fund	1,920
Additional establishment.—	
Assistant	7,200
Head Mali	2,040
Sanitary and estate charges	7,440

2. The Advisory Board recommended in 1930 the establishment of a Botanical Sub-Station at Karnal to serve the needs of North Western India at a total cost of Rs. 1,33,850 for five years. The work at the station was initiated on the 1st October 1930. An extension for 5 years at a cost of Rs. 1,30,080 was sanctioned in 1935 and the extended scheme is due to expire on the 30th September 1940. With the transfer of the Imperial Agricultural Research Institute from Pusa to New Delhi, the Sub-Station was moved from Karnal to Pusa with effect from the 1st August, 1936. Sir John Russell has commented favourably on the working of the station and has recommended its work being taken over as a permanent activity of the Institute (*cf.* pp. 97 and 166 of Sir John Russell's Report—1937 print). The Director has stated that 'financial stringency precludes the consideration of this recommendation at present'.

3. The scheme is for the consideration of the Advisory Board.

ANNEXURE I.

COPY OF LETTER FROM THE GOVERNMENT OF INDIA, DEPARTMENT OF EDUCATION, HEALTH AND LANDS, TO THE SECRETARY, IMPERIAL COUNCIL OF AGRICULTURAL RESEARCH, NO. F. 40-4/39-A., DATED THE 17TH MAY 1939.

In continuation of this Department letter No. F. 40-3/39-A., dated the 16th May 1939, I am directed to forward a scheme submitted by the Director

Imperial Agricultural Research Institute, for the continuance of the Botanical Sub-Station, Pusa, for a further period of five years, together with a copy of his letter No. 3171, dated the 1st May 1939. The Government of India approve the scheme, which it will be seen, involves an expenditure of Rs. 1,58,260* (Rs. 1,56,260 recurring and Rs. 2,000 non-recurring) during the extension period. In view of the impending meeting of the Advisory Board of the Imperial Council of Agricultural Research I am to explain that preliminary consultation is being dispensed with and the scheme is being forwarded direct with a request that the decision of the Council may be communicated to the Government of India in due course.

ANNEXURE II.

COPY OF LETTER FROM RAO BAHADUR B. VISWA NATH, F. I. C., DIRECTOR, IMPERIAL AGRICULTURAL RESEARCH INSTITUTE, TO THE SECRETARY TO THE GOVERNMENT OF INDIA, DEPARTMENT OF EDUCATION, HEALTH AND LANDS, SIMLA, NO. 3171 OF 1939, DATED NEW DELHI, THE 1ST MAY 1939.

SUBJECT.—*Botanical Sub-station, Pusa—Proposal for extension of the scheme.*

In continuation of my letter No. 3163, dated the 1st May 1939, forwarding a proposal for the extension of the Potato Breeding Scheme at Simla, I have the honour to submit herewith (in duplicate) a proposal (enclosure) for the extension of the Botanical Sub-station, Pusa, for a further period of 5 years from October 1940 with the request that if the scheme is approved by Government it may kindly be forwarded to the Imperial Council of Agricultural Research for consideration at the next meeting of the Advisory Board.

The scheme is estimated to cost Rs. 1,58,260† (Rs. 1,56,260 recurring and Rs. 2,000 non-recurring) during the extension period.

ENCLOSURE TO ANNEXURE II.

SCHEME FOR THE CONTINUANCE OF THE BOTANICAL SUB-STATION, PUSA, FOR A FURTHER PERIOD OF FIVE YEARS.

The Botanical Sub-station Scheme was originally sanctioned by the Imperial Council of Agricultural Research for a five year period commencing from September 1930 and the Sub-station was originally established at Karnal. The scheme was renewed in October 1935 for a period of five years, and the present extension expires in September 1940. With the transfer of the Imperial Agricultural Research Institute from Pusa to New Delhi, the Sub-station was moved from Karnal to Pusa, with effect from the 1st August, 1936.

---

*This estimate has been increased by Rs. 5,000 due to provision of leave salary, vide letter from the Education, Health and Lands Department No. F. 40-4/39-A., dated the 4th August, 1939. The details in scheme have been corrected accordingly.

†This has been increased by Rs. 5,000 due to provision of leave salary vide letter No. 4938, dated 11th July 1939 from the Director, I. A. R. I., to the Government of India E., H. & L. Department. The details in statements have been corrected accordingly.

The programme of work of the present period of the scheme and a resume of the work done are provided in the sections which follow.

It may be pointed out here that when the transfer of the Imperial Agricultural Research Institute to New Delhi was under contemplation there was a demand that the activities of the Imperial Department of Agriculture at Pusa should not be suspended, and it was decided that a Sub-station of the Imperial Agricultural Research Institute should be retained there. Sir John Russell has said, ' Although the main research work of Pusa has been transferred to Delhi it is obviously important to retain a Botanical Sub-station in north-east India and accordingly the Council is maintaining there a Botanical Sub-station '. Sir John has indeed further expressed the opinion that the Botanical Sub-station at Pusa should become a permanent sub-station of the Institute itself: financial stringency however precludes the consideration of this recommendation at present.

PRESENT PROGRAMME OF WORK.

The Sub-station was originally started at Karnal with the object of :—

(1) providing an irrigated area under North-Western Indian conditions for the trial of varieties bred in the Botanical Section, Pusa;

(2) providing an area in which late maturing varieties bred at Pusa might be tried under conditions which were more favourable for their development than those which prevailed in Bihar. Before the establishment of Karnal such late maturing types, which might possibly be suitable for north India, could not be adequately tested;

(3) providing an irrigated area for rice breeding;

(4) providing an area which would afford training and demonstration to the post-graduate students under northern India conditions with irrigation; and

(5) providing an area in which seeds of the well-known Pusa types could be multiplied in a locality such that the freight charges to other places in northern and western India would not be prohibitive.

With the establishment of the Imperial Agricultural Research Institute at Delhi a botanical sub-station was no longer required at Karnal which is only 70 miles away. It became necessary however to make some provision for botanical work in North-east India and the programme of work of the sub-station at Pusa was stated as follows :—

1. Breeding and testing varieties suitable for North-east India.
2. Multiplication of seed for North-eastern provinces under conditions which would make supply cheaper owing to saving in freight.
3. The continuance of the permanent manurial experiments which constituted one of the chief agricultural experiments of the Imperial Agricultural Research Institute when it was located at Pusa.

4. The training of post-graduate students under agricultural conditions which differ from those which prevail at the new site of the Imperial Agricultural Research Institute at Delhi. It was pointed out that some lines of botanical work, for example, breeding work with pigeon-peas and tobacco investigations for which the climate of Pusa is well suited, would have to be continued there. It was also pointed out that the Sub-station would be able to afford facilities for the Entomological and Mycological Sections for the study of pests and diseases under conditions differing from those of Delhi. As a matter of fact the Sub-station has been providing facilities for the investigations on leaf-curl diseases of tobacco and for the study of sngarcane pests, both of which are being undertaken in connection with schemes financed by the Imperial Council of Agricultural Research.

Resume of work done. *(And to be done up to the end of present period).*

1. Breeding and testing varieties suitable for North-east India.

While the present work at Pusa is mainly devoted to the evolution of superior strains suitable for North-east India, the location of the sub-station at Karnal before its transfer to Pusa afforded facilities for testing the suitability of Pusa strains for conditions obtaining at Karnal and North-west India. These trials also helped to isolate suitable varieties for this tract.

Wheat.—Varietal trials of Pusa strains at Karnal resulted in the selection of two new hybrids Pusa-120 and Pusa-165 which have since confirmed their superiority over other Pusa strains in Co-operative yield trials conducted simultaneously at Karnal. Pusa and in a number of Government farms in the Punjab, the United Provinces of Agra and Ondh. Pusa-165 is a heavy yielder while Pusa-120 is highly resistant to rusts but yields less owing to its grain-shedding character.

A number of new hybrids are now under study at Pusa with the object of producing a bearded strain similar to Pusa-165.

Barley.—Trials of Pusa varieties and selections from Lyallpur showed that Pusa Type 13 was about the best for conditions obtaining at Karnal. This is being substituted for Pusa Type 21 under distribution in North-west India.

A large number of new hybrid selections are at present under study at Pusa. Genetical studies in this crop are also in progress.

Paddy.—Fortyone types of autumn paddies were isolated and classified at Karnal. Unlike in Bihar and Bengal, the growing season for Paddy in the Western United Provinces and Eastern Punjab, is shorter owing to the onset of cold weather in November which seriously interferes with fertilization and grain setting. Early paddies, therefore, predominate in the area and the selections were made to suit the locality. Types 125 and 130 are the most promising selections. Yield trials of the most promising strains among the 124 selections made by the Botanical Section have been in progress.

Gram.—This crop has been receiving intensive attention both on its agronomic and genetic aspects and the results obtained have been published from time to time. Two very interesting mutants, one with simple leaves and the other with tiny, double compound leaves have been isolated and studied at Karnal. The genetics of the mutants are nearly worked out while their economic utility is under investigation at Delhi.

Brassica.—At Karnal, a preliminary classification of the oil yielding Brassicæ was drawn up and the study of inheritance of seed colour and self-sterility started. Further work on this crop is continued at the Imperial Agricultural Research Institute, New Delhi.

Other crops.—Breeding and testing superior strains are in progress at Pusa with a number of other crops such as oats, pigeon-peas, lentils, *mung*, *urid*, linseed, safflower sesamum, *Hibiscus*, sunnhemp, tobacco, chillies, and soybeans. Several improved strains have already been evolved and are under distribution.

(2) Multiplication of seed for North-east Provinces.

Multiplication of pedigree seeds for distribution is a constant feature of the work of the Sub-station. The growing popularity of the Pusa strains has resulted in a steadily increasing demand for pure seeds and the sub-station with its limited resources is able to meet only a fraction of the demand. A statement showing the quantities of seeds of crops distributed from the Sub-station, Pusa, during the period 1st July 1935 to 31st March 1939 is presented in Statement 1.

(3) The continuance of the permanent manurial experiments, etc.

The permanent manurial experiments were continued. The second four year course of the new manurial trial laid out by the Imperial Agriculturist will be completed next year. The results have been presented in detail in the annual progress reports.

(4) The training of post-graduate students, etc.

The large number of crops handled and the variety of problems, both agronomic and genetic, that are being investigated at the Sub-station, provide good opportunities for the training of post-graduate students. Besides, a short course of training in tobacco flue-curing is also given at the Sub-station, where facilities for such work exist.

The Substation has been very useful in providing that collaboration with other experts of the Institute so essential for tackling problems of disease and pest control in crops.

THE WORK TO BE DONE IN THE FUTURE.

It is proposed during the further period of extension to continue the work on the basis already in progress. The technical programme of work is given below.

1. *Technical Programme of work.*—Continuation of the breeding of crops suitable for North-east India, paying special attention to yield quality, and disease resistance. This will include :—

(*a*) *Wheat.*—The F_5 and later generations of wheat hybrids will be grown with the object of isolating and selecting early strains like Pusa-165. Preference will be given to bearded types and those which exhibit resistance to rust, etc., under field conditions.

(*b*) *Barley.*—The breeding and genetical work already in progress will be continued.

(*c*) *Oats.*—The breeding of high-yielding, non-shattering oats suitable for fodder purposes.

(*d*) *Paddy.*—The collection of paddy types will be maintained.

(*e*) *Pigeon-pea.*—The breeding of wilt-resistant strains will be continued.

(*f*) *Soybean.*—Selection of early maturing varieties suitable for fodder.

(*g*) *Tobacco.*—Testing of cigarette varieties to supplement the work in progress at Guntur. The best manures for use under North Bihar conditions will also be investigated.

(*h*) *Sunnhemp.*—Continuation of breeding work in sunnhemp.

It should be emphasized that almost without exception the above do not represent new items but are simply the continuation of work on plant material taken over from the Botanical Section when the Institute was transferred to Delhi. Members of the staff of the Botanical Section frequently tour to Pusa and assist in the experimental work.

2. Multiplication of seeds for North-eastern India under conditions which would make supply cheaper owing to saving in freight.

This item does not require explanation.

3. The continuance of the permanent manurial experiments at Pusa.

This item also is self-evident.

4. The provision of facilities for the training of post-graduate students under agricultural conditions which differ from those of the area in which the Imperial Agricultural Research Institute is now located. Facilities will also be afforded to the Entomological and Mycological Sections for the study of pests and diseases under conditions differing from those of Delhi.

ESTIMATES OF EXPENDITURE.

The Imperial Council of Agricultural Research originally provided a sum of Rs. 83,090 as a non-recurring grant and a total sum of Rs. 1,23,847-8-0 spread over a period of five years, *viz.*, 1930 to 1935 for recurring expenses. The Council has further provided a further sum of Rs. 1,30,080 for the running cost of the Sub-station for the period October 1935 to September 1940. Detailed *estimates of expenditure during the present extension period* is given below :—

Expenditure at the Botanical Sub-Station (*formerly at Karnal and now at Pusa*) *for the period 1st October 1935 to 30th September 1940.*

No.	Detailed Heads.	Actual expenditure.				Budget 1939-40.	Probable expenditure April/40 to September/40.	Total.	Remarks.
		October/35 to March/36.	1936-37.	1937-38.	1938-39.				
		Rs. a. p.	Rs. a. p.	Rs. a. p.	Rs. a. p.	Rs. a. p.	Rs. a. p.	Rs. a. p.	
	Pay of Officer (Voted)—								
1	Superintendent ..	1,800 0 0	4,551 10 0	5,030 2 0	5,280 0 0	5,520 0 0	2,880 0 0	25,061 12 0	
	Pay of Establishment (Voted)—								
8	Assistant, Clerk, etc. ..	2,473 5 0	5,256 8 0	5,334 8 0	4,870 2 0	5,510 0 0	2,570 0 0	26,029 7 0	
3	Servants	276 0 0	524 0 0	504 0 0	504 0 0	504 0 0	252 0 0	2,564 0 0	
	Supplies and Services—								
	Apparatus and Machinery	2,038 0 0	2,488 3 0	2,496 10 0	2,120 0 0	2,500 0 0	1,200 0 0	12,842 13 0	
	Plant Breeding and Cultivation	5,142 6 3	9,569 12 3	9,785 9 3	10,091 12 6	9,900 0 0	5,000 0 0	49,489 8 3	
	Miscellaneous and Contingencies	566 14 6	1,846 6 9	1,043 10 3	971 6 11	1,000 0 0	500 0 0	5,328 6 5	
	T. A. of Staff	597 8 0	980 14 0	697 8 0	782 6 0	800 0 0	400 0 0	4,258 4 0	
	Total ..	12,894 1 9	25,217 6 0	24,891 15 6	24,628 11 5	25,740 0 0	12,802 0 0	1,26,174 2 8	

Since the inception of the Sub-station receipts detailed below were realised mostly from the sales of improved seeds and other produces:—

	Rs.	a.	p.
Up to 30th June—			
1931	9	6	0
1932	1,250	7	9
1933	3,976	12	6
1934	4,096	13	1
1935	2,158	14	6
1936	2,901	11	3
Up to 31st March—			
1937	2,143	3	3
1938	3,005	15	3
1939	3,160	9	0

A budget estimate for the continuance of the Botanical Sub-station scheme for the period 1st October 1940 to 30th September 1945 on the basis of the present staff is submitted below, under Head 'A' and shows a total expenditure of Rs. 1,44,580 only. The present staff is inadequate and with the increase of research work at Pusa, it is essential that in addition to one farm assistant and one Head-mali employed so far, one Botanical assistant and another Head-mali on similar scales of pay be appointed for the efficient running of the Sub-station. It may be pointed out that work at the present scale has been possible at Pusa only because of the deputation of a number of members of the staff of the Botanical Section as well as to the freqnent tours undertaken to Pusa by officers of that section. Should this proposal be given the consideration it deserves, it involves an addition of merely Rs. 9,240 during the whole course of the next five years extension. This is shown under Head 'B' of the budget estimate shown below:—

Budget estimate—Expenditure for period 1st October 1940 to 30th September 1945. Botanical Sub-station, Pusa.

Head No.	Sub-heads and detailed heads.	1940-41 6 months.	1941-42.	1942-43.	1943-44.	1944-45.	1945 6 months.	Total.
		Rs.	Rs.	Rs.	Rs.	Rs.	Rs.	Rs.
'A'	*Pay of officer (Voted)*—							
	1. Superintendent ..	2,880	6,000	6,240	6,480	6,720	3,480	31,800
	Pay of Establishment (Voted)—							
	8. Assistant, Clerk, etc.	2,950	6,100	6,360	6,600	6,840	3,490	32,340
	3. Servants	252	504	504	504	504	252	2,520
	Leave Salary	500	1,000	1,000	1,000	1,000	500	5,000
	Contributory Provident Fund (Superintendent and 2 Assistants) ..	164	344	370	396	427	219	1,920
	Supplies and Services—							
	Apparatus and Machinery	1,250	2,500	2,500	2,500	2,500	1,250	12,500
	Plant Br. and Cultn. ..	4,950	9,900	9,900	9,900	9,900	4,950	49,500
	Miscellaneous ..	500	1,000	1,000	1,000	1,000	500	5,000
	T. A. of Staff	400	800	800	800	800	400	4,000
	Total ..	13,846	28,148	28,674	29,180	29,691	15,541	1,44,580

Head No.	Sub-heads and detailed heads.	1940-41 6 months.	1941-42.	1942-43.	1943-44.	1944-45.	1945 6 months.	Total.
		Rs.	Rs.	Rs.	Rs.	Rs.	Rs.	Rs.
	'**B**' ***Additional Establishment*** (*Voted*)—							
	1 Assistant	600	1,260	1,380	1,500	1,620	840	7,200
	1 Head-mali	180	372	396	420	444	228	2,040
	Total ..	780	1,632	1,776	1,920	2,064	1,068	9,240
	GRAND TOTAL ..	14,628	29,780	30,450	31,100	31,755	16,609	1,53,820

In addition, a sum of Rs. 7,440 will be required for sanitary and other arrangements as per details given in Statement II. The total running cost of the Sub-station for the extension period of 5 years therefore amounts to Rs. 1,61,260.

NON-RECURRING GRANT.

In the event of the continuance of the Sub-station a non-recurring grant of Rs. 2,000 shall be required for the purpose of purchasing new draught and transport animals, mainly to replace old and unserviceable ones.

Estimated receipts for period October 1940—September 1945.

Total.	Share of Imperial Council of Agricultural Research.
Rs. 15,000	Rs. 7,500.

STATEMENT I.

Statement showing the quantities of seeds distributed from the Botanical Sub-Station, Pusa, during the period 1st July 1935 to 31st March 1939.

Crops.	Weight of seeds distributed in Lbs.				
	From July/35 to June/36.	From July/36 to June/37.	From July/37 to June/38.	From July/38 to March/39.	Total.
I. Cereals—					
Wheat	47862·8	8960·0	9150·3	6537·6	72510·7
Barley	..	4029·0	1800·2	1336·1	7164·3
Oats	3373·8	1263·0	2950·1	6370·1	13957·1
Paddy	—	503·0	1008·5	3499·5	5011·0
Maize	—	2469·0	39·1	..	2508·1

STATEMENT I—*contd.*

Crops.	From July/35 to June/36.	From July/36 to June/37.	From July/37 to June/38.	From July/38 to March/39.	Total.
	Weight of seeds distributed in Lbs.				
Pulses—					
Gram	580·1	2046·0	..	515·3	3141·4
Green gram (Mung)	..	63·1	129·1	46·3	238·4
Black gram (Urid)	..	5·0	..	..	5·0
Peas	567·8	689·0	113·9	1818·5	3189·2
Pigeon-peas	..	1333·0	201·7	211·9	1746·6
Lentils	..	220·0	380·8	26·6	627·4
Soybean	..	320·0	64·7	..	384·7
Meth	..	218·0	2·1	..	220·1
III. Oilseeds—					
Linseed	56·4	847·0	481·3	335·5	1720·2
Sesamum	..	·1	..	..	·1
Safflower	..	8·0	5·0	..	13·0
Brassica	..	..	..	..	..
IV. Fibre Plants—					
Hibiscus seed	..	33·0	387·0	..	420·0
Hibiscus Fibre	..	..	..	987·4	987·4
Hibiscus Flax	61·7	..	..	..	61·7
Sunn-hemp	..	123·0	87·3	..	210·3
V. Money Crops—					
Tobacco seed	..	41·6	47·0	9·9	98·5
Tobacco cured leaves	..	2688·0	1926·0	..	4614·0
Chillies seed	..	6·4	5·3	1·2	12·9
Chillies fruits	..	..	..	20·0	20·6
Potatoes	..	..	..	269·5	369·5
Ganja seed	..	..	93·5	82·3	175·8
VI. Miscellaneous—					
Guinea grass	(Stolens)	..	100	700	800
Elephant grass	(Stolens)	..	..	700	700
Akta seed	..	..	41·0	..	41·0

STATEMENT

Details of Budget estimates for 5 years from

1. Staff.	1940-41 6 months.		1941-42.		1942-43.	
(1) *Gazetted Officer.*		Rs.		Rs.		Rs.
Superintendent ..	1-9-40 to 28-2-41 @ 480/-	2,380	1-3-41 to 28-2-42 @ 600/-	6,000	1-3-42 to 28-2-43 @ 520/-	6,240
(2) *Subordinate Staff.*						
Farm Assistant ..	1-9-40 to 28-2-41 @ Rs. 140	840	1-3-41 to 31-7-41 @ Rs. 140=*700* 1-8-41 to 28-2-42 @ Rs. 150=1,050	1,750	1-3-42 to 31-7-42 @ Rs. 150=750 1-8-42 to 28-2-43 @ Rs. 160=1,120.	1,870
Store-keeper ..	1-9-40 to 19-10-40 @ 67=*108-1* 20-10-40 to 28-2-41 @ Rs. 70=*307-1*	416	1-3-41 *to 19-10-41* @ Rs. 70=*532-14* 20-10-41 to 28-2-42 @ Rs. 72½=*318-1*	851	1-3-4-42 *to* 19-10-42 @ Rs. 72½=*551-15* 20-10-42 to 28-2-43 @ Rs. 75=*329-1*	881
Fieldman ..	1-9-40 to 28-2-41 @ Rs. 48	288	1-3-41 to 19-7-41 @ Rs. 48=*221-7* 20-7-41 to 28-2-42 @ Rs. 52=*384-2*	605	1-3-41 to 19-7-42 @ Rs. 52=*239-14* 20-7-42 to 28-2-43 @ Rs. 56=*413-11*	654
Clerk	1-9-40 to 1-2-41 @ Rs. 67=*337-6* 2-2-41 to 28-2-41 @ Rs. 70=*67-8*	405	1-3-41 to 1-2-42 @ Rs. 70=*772-8* 2-2-42 to 28-2-42 @ Rs. 72½=*69-15*	842	1-3-42 to 1-2-43 @ Rs. 72½=*800-1* 2-2-43 to 28-2-43 @ Rs. 75=*72-6*	873
Head-mali ..	1-9-40 to 28-2-41 @ Rs. 48	288	1-3-41 to 31-3-41 @ Rs. 48=*48* 1-4-41 to 28-2-42 @ Rs. 50=*550*	598	1-3-42 to 28-2-43 @ Rs. 50	600
Mistri ..	1-9-40 to 28-2-41 @ Rs. 72½	435	1-3-41 to 22-4-41 @ Rs. 72½=*125-11* 23-4-41 to 28-2-42 @ Rs. 75=*770*	895	1-3-42 to 28-2-43 @ Rs. 75	900
Assistant Mali (1)	1-9-40 to 28-2-41 @ Rs. 25	150	1-3-41 to 28-2-42 @ Rs. 25	300	1-3-42 to 28-2-43 @ Rs. 25	300
Assistant Mali (2)	1-9-40 to 31-1-41 @ Rs. 21=*105* 1-2-41 to 28-2-41 @ Rs. 22=*22*	127	1-3-41 to 31-1-42 @ Rs. 22=*242* 1-2-42 to 28-2-42 @ Rs. 23=*23*	265	1-3-42 to 31-1-43 @ Rs. 23=*253* 1-2-43 to 28-2-43 @ Rs. 24=*24*	277
2 Chowkidars ..	1-9-40 to 28-2-41 @ Rs. 15	180	1-3-41 to 28-2-42 @ Rs. 15	360	1-3-42 to 28-2-43 @ Rs. 15	360
Peon	1-9-40 to 28-2-41 @ *Rs. 12*	72	1-3-41 to 28-2-42 @ *Rs. 12*	144	1-3-42 to 28-2-43 @ Rs. 12	144
Contribution of Provident Fund.		164		344		370
(**Superintendent & 2 Assistants*).						
Leave Salary ..		500		1,000		1,000
Supplies and Services.						
Apparatus and Machinery.		1,250		2,500		2,500
Plant Breeding and Cultn.		4,950		9,900		9,900
Miscellaneous ..		500		1,000		1,000
T. A. of Staff ..		400		800		800
Total ..		13,846		28,148		28,674

II.

1st September 1940 to 31st August 1945.

1943-44.		1944-45.		1945 6 months.		Total.
	Rs		Rs.		Rs.	Rs.
1-3-43 to 29-2-44 @ Rs. 540	6,480	1-3-44 to 28-2-45 @ Rs. 560	6,720	1-3-45 to 31-6-45 @ Rs. 580	3,480	31,800
1-3-43 to 31-7-43 @ Rs. *160=800* 1-8-43 to 29-2-44 @ Rs. *170=1,190*	1,990	1-3-44 to 31-7-44 @ Rs. 170=*850* 1-8-44 to 28-2-45 @ Rs. *180=1,260*	2,110	1-3-45 to 31-7-45 @ Rs. 180=*900* 1-8-45 to 31-8-45 @ Rs. 190=*190*	1,090	9,650
1-3-43 to 19-10-43 @ Rs. 75=*871* 20-10-43 to 29-2-44 @ Rs. 77½=*340*	911	1-3-44 to 19-10-44 @ Rs. 77½=*590* 2-10-44 to 28-2-45 @ Rs. 80=*351.*	941	1-3-45 to 31-8-45 @ Rs. 80	480	4,480
1-3-43 to 19-7-43 @ Rs. 56=*358-5* 20-7-43 to 29-2-44 @ Rs. 60=*443-4*	702	1-3-44 to 19-7-44 @ Rs. 60=*276-12* 20-7-44 to 28-2-45 @ Rs. 64=*472-13*	750	1-3-45 to 19-7-45 @ Rs. 64=*295-3* 20-7-45 to 31-8-45 @ Rs. 68=*94-5*	390	3,389
1-3-43 to 1-2-44 @ *Rs. 75=827-9* 2-2-44 to 29-2-44 @ Rs. *72½=74-14*	903	1-3-44 to 1-2-45 @ Rs. *77½=855-4* 2-2-45 to 28-2-45 @ Rs. 80=*77-2*	933	1-3-45 to 31-8-45 @ Rs. 80	480	4,436
1-3-43 to 29-2-44 @ Rs. 50	600	1-3-44 to 28-2-45 @ Rs. 50	600	1-3-45 to 31-8-45 @ Rs. 50	300	2,986
1-3-43 to 29-2-44 @ Rs. 75	900	1-3-44 to 28-2-45 @ Rs. 75	900	1-3-45 to 31-8-45 @ Rs. 75	450	4,420
1-3-43 to 29-2-44 @ Rs. 25	300	1-3-44 to 28-2-45 @ Rs. 25	300	1-3-45 to 31-8-45 @ Rs. 25	150	1,500
1-3-43 to 31-1-44 @ Rs. 25=*264* 1-2-44 to 29-2-44 @ Rs. 25=*25*	289	1-3-44 to 28-2-45 @ Rs. 25	300	1-3-45 to 31-8-45 @ Rs. 25	150	1,403
1-3-43 to 29-2-44 @ Rs. 15	360	1-3-44 to 28-2-45 @ Rs. 15	360	1-3-45 to 31-6-45 @ Rs. 15	180	1,800
1-3-43 to 29-2-44 @ Rs. 12	144	1-3-44 to 28-2-45 @ Rs. 12	144	1-3-45 to 31-8-45 @ Rs. 12	72	720
	396		427		219	1,920
	1,000		1,000		500	5,000
	2,500		2,500		1,250	12,500
	9,900		9,900		4,950	49,500
	1,000		1,000		500	5,000
	800		800		400	4,000
	29,180		29,691		15,541	1,44,580

Rs. 200—215—245—260.

1. Staff.	*1940-41* 6 months.	1941-42.	1942-43.
	Rs.	Rs.	Rs.
Additional Establishment (Voted).			
1 Assistant ..	600	1,260	1,380
1 Head Mali ..	180	372	396
Total	780	1,632	1,776
GRAND TOTAL ..	14,626	29,780	30,450

1943-44.	1944-45.	1945 6 months.	Total
Rs.	Rs.	Rs.	Rs.
1,500	1,620	840	7,200
420	444	228	2,040
1,920	2,064	1,068	9,240
81,100	31,755	16,609	1,52,820

Sanitary, Hostel and Estate Charges.

Expenditure on	1940-41 6 months.	1941-42.	1942-43.	1943-44.	1944-45.	1945 6 months.	Total.
	Rs.	Rs.	Rs.	Rs.	Rs.	Rs.	Rs.
Sanitation and Estate Contingencies	50	100	100	100	100	50	500
Hostel and Rest House Contingencies	70	140	140	140	140	70	700
4 Sweepers	216	432	432	432	432	216	2,160
1 Khansama	96	192	192	192	192	96	960
5 Chowkidars	312	624	624	624	624	312	3,120
Total ..	744	1,488	1,488	1,488	1,488	744	7,440

In addition to the above expenditure the usual land rent and maintenance of roads and buildings will have to be borne from the appropriate heads.

APPENDIX XLII.

Note on Subject No. 19 (e) :—Application from Rai Bahadur Dr. K. C. Mehta for a grant of Rs. 58,314 spread over three years for the continuance of investigations on '*Sereal Rusts*' in India.

In November 1937 the Advisory Board recommended extension of Dr. Mehta's scheme for investigations on 'cereal rusts' for a period of two years from 1st April 1938 (pages 111, 695—707 of the printed proceedings of the Board). The scheme has been in existence since 1930 and at the time of the last extension the Wheat Committee, *inter alia*, desired that—

(*i*) a publication called "Studies in cereal rusts in India" should be issued in three parts during the first year of the extension, the remaining data being published in the second year,

(*ii*) during these two years decentralisation should also be arranged in consultation with provincial governments and constituent states.

2. These recommendations were accepted by the Advisory Board and the Governing Body and it was anticipated that within the period sanctioned Dr. Mehta would be able to write up an account of his researches into the form of a monograph and arrangements would be made for passing on certain part of the work to other provinces. As regards the issue of publications on cereal rusts, Dr. Mehta submitted during the first year of the extension an article entitled "Further studies in cereal rusts in India, I—'Physiologic races', II—'Role of Alternate Hosts' and III—'Oversummering in relation to annual recurrence'." The article is at present in proof stage and it will be published shortly in the form of a monograph. As regards decentralisation, a note by the Agricultural Commissioner with the Government of India, explaining the present position is attached (Annexure I).

3. The Government of the United Provinces have now submitted another application from Dr. Mehta (Annexure II) for the extension of the scheme for a further period of three years from 1st April 1940 when the present extension expires. The scheme involves recurring expenditure of Rs. 58,314 spread over three years and the following statement shows the variations in expenditure as compared with the grant sanctioned at the time of the last extension :—

Expenditure sanctioned under the present scheme.		Expenditure proposed under the fresh application for extension.	
Particulars.	Cost Rs.	Particulars.	Cost Rs.
I.—Establishment—		I.—Establishment*—	
(1) One Senior Assistant on ..	200—15—260	(1) Assistant Mycologist on ..	305—20—345
(2) One Research Assistant on	150—10—190	(2) Junior Research Assistant on	100—5—110
(3) One Research Assistant on	150—10—190	(3) Personal Research Assistant to the Officer-in-charge on	170—10—200
(4) One Junior Assistant on	100—5—120	(4) Research Assistant (for six months, October-March, each year at Agra) on ..	75
(5) One Junior Assistant on	50—5—100	(5) Meteorological Assistant (for six months) only in the first year on	75

*If during the course of this scheme any new schemes are sanctioned for breeding of resistant varieties in the Provinces and States, one more junior assistant will be required for the laboratory at Simla.

Expenditure sanctioned under the present scheme. Particulars.	Cost Rs.	Expenditure proposed under the fresh application for extension. Particulars.	Cost Rs.
I.—Establishment—*contd.*		I.—Establishment—*contd.*	
(6) Typist and Clerk on ..	70—5—90	(6) Morphological Assistant only for the first year. He will also scrutinize and tabulate data of wind curves on ..	110
(7) For meterological data and wind trajectories—One Assistant for 1938-39 at Rs. 90 per mensem. For four months each year during 1939-41 at Rs. 75 per mensem.		(7) Steno-typist, Clerk and Storekeeper on	65—3—75
(8) Three bearers at Simla. One peon and one bearer at Agra. Two bearers at Agra for 6 months.		(8) Clerk and Storekeeper at Simla on	50—3—56
(9) One Chaukidar at Agra.		(9) Three bearers at Simla. One peon and one bearer at Agra. One bearer at Agra for six months each year (October-March) ..	..
(10) One Sweeper (part-time) at Simla.		(10) One chaukidar at Agra ..	..
		(11) One part-time sweeper at Simla.	..
II.—Equipment—		II.—*Equipment—*	
New fans for green houses if needed, repairs to and replacement of old articles of equipment and repairs to green houses, etc.	2,000	(Maintenance of greenhouses; replacement of old fans, if necessary, and other articles of equipment)	1,000
III.—Maintenance and Contingent Expenses including rent of the Laboratory at Simla ..	3,500 per year.	III.—Maintenance and contingent expenses (including rent of laboratory at Simla) ..	2,750 per year.
IV.—Travelling allowances ..	3,000 per year.	IV.—Travelling allowances ..	2,000 per year.
V.—Compensatory allowances	600 per year.	V.—Leave Salaries	170 per year.
VI.—To Agra College—		VI.—To Agra College—	
For arrangements of teaching and relief in supervision to the officer-in-charge ..	9,000 per year.	(For relief to officer-in-charge in teaching duties) scale of pay	240—10—250
VII.—*For survey and the study of rust epidemiology in the Provinces and States—*			
This work will be done under the control of the departments of Agriculture in the Punjab, Central Provinces, Bombay-Deccan and Madras.			
(1) One Assistant for the Punjab, Kashmir and Sind at Rs. 75 per mensem for six months (December-May) each year, his travelling allowances and contingent expenses ..	750 per year.		
(2) One Assistant for the Central Provinces, Central India and Bengal at Rs. 75 per mensem for four months each year, his travelling allowances and contingent expenses	600 per year.		
(3) One Assistant for Bombay-Deccan and Hyderabad for five months each year (October-February) at Rs. 75 per mensem his travelling allowances and contingent expenses	600 per year.		
(4) One Assistant for Madras at Rs. 80 per mensem for three years his travelling allowances and contingent expenses ..	1,330 per year.		

4. The proposal is for the consideration of the Advisory Board. As usual, the subject will first be considered by Botanical and Physiological Sub-Committee whose report will be circulated to the Board in due course.

ANNEXURE I.

The Future of Work on Cereal Rusts in India.

(Note by the Agricultural Commissioner.)

It would have been better if proposals for the extension of the scheme on rusts of cereals had been submitted six months ago when the Wheat Committee met and when the Governing Body could have dealt with the recommendations of the Wheat Committee and the Advisory Board. When this scheme was last considered, the general impression was that it would cease in its present form as from March 31st, 1940.

The scheme has now run for ten years and cost Rs. 2,56,480 ; the main results have been written up and will shortly be published, and it is fitting to consider, or rather to reconsider (for it was considered two years ago) whether this is not a suitable time to make other arrangements, and particularly whether the Imperial Council of Agricultural Research should not now subsidise only such work as is essential as an aid to plant-breeding, and in the most economical way.

Let us first consider the aims of the proposed new extension as outlined by Dr. Mehta in his technical programme.

(1) Study of physiologic races :—

We know (thanks to the work of Dr. Mehta and his assistants) that we have fortunately not many physiologic races in this country. Dr. Mehta has not isolated new races in recent years. We have got the necessary knowledge regarding the races which are of common occurrence in the important wheat growing areas of India. It is not denied that we may run across one or two more races, but there is no doubt that the study of physiologic races need not occupy either absolutely or proportionately anything like the time and staff previously employed.

(2) *Tests connected with breeding of resistant varieties of wheat and barley* :—

This is routine work.

(3) *Culture of rusts at the laboratory at Simla* :—

Single spore cultures will have to be maintained at Simla. This is routine work.

(4) *Life histories of black rust of wheat and barley* :—

In my opinion the work on barberry and Thalictrum should stop. The relationships of barberry to infection in wheat have been under study since 1928, and if nothing positive has been found by now, I think we had better consider that so far as the Imperial Council of Agricultural Research at least is concerned, there is no cause for further financial subsidy.

(5) *Morphological studies of Barberry leaf* :—

The same remarks apply.

(6) *Rust epidemiology* :—

Dr. Mehta leaves the collection of the meteorological data to the provincial staff, and intends to come in on the co-ordination only.

To summarise :—

Items (1), (2) and (3) are the only ones necessary. Of these, item (1) needs limited attention, (2) and (3) are routine work. Even should further pure research be considered desirable, I suggest that it should wait till the present state of emergency passes. Even in normal circumstances there would be a strong case for reducing the work and its cost below that proposed in the extension scheme. In the present war conditions this becomes imperative. Saving can be effected by

(1) reduction of staff and programme,

(2) Transfer of the actual site of the work from Flowerdale to Kanlog where the potato and wheat breeding work is being done under the Imperial Economic Botanist.

(3) Transference of the work to the control of the Imperial Agritural Research Institute.

(1) The staff which appears to me sufficient for carrying out the reduced programme is as follows :—

——	Years. 1st.	2nd.	3rd.	3 years total.
	Rs.	Rs.	Rs.	Rs.
Three assistants‡ at Rs. 100—5—150—10—250	3,600	3,780	3,960	11,340
Two fieldmen at Rs. 40—2½—70—3—100 ..	960	1,020	1,080	3,060
Two *malis* at Rs. 20—3/2—26	480	480	552	1,512
One peon at Rs. 18	216	216	216	648
One bearer at Rs. 20	240	240	240	720
Total ..	5,496	5,736	6,048	17,280

(2) The transference of the work from Flowerdale to Kanlog will result in the following savings :—

	Per Annum.	For three years.
	Rs.	Rs.
Estimated saving of rent of Flowerdale	1,250	3,75[illegible]
Estimated saving on difference of electric charges—		
*Light	154	462
*Power	271	813
*(Flowerdale pays a flat rate of 8 as. a unit for light and power. Kanlog power 6 pies in winter and 9 pies in summer. Light 4 annas a unit less 10% discount for early payment).		
Estimated saving on difference in water charges	†37	111
Total	1,712	5,136

*(Due to Kanlog being within the Municipal boundaries while Flowerdale is outside them.)

†(Flowerdale pays Rs. 5 per 1,000 gallons all the year round while Kanlog pays Rs. 5 in summer and Rs. 2 in winter. Besides there are arrangements made at Kanlog for getting spring water and so no payment is made for irrigation water.)

‡It will probably be desirable to take in one or more of the junior Assistants already working in the scheme and as their pay may be above the minimum Rs. 100 in the scale suggested, we may round this figure to Rs. 40,000, of which Rs. 15,000 is entirely due to the transfer (and paid for once for all) and only Rs. 25,000 is for the actual three years running of the scheme.

(3) *Transference of the work to the Imperial Agricultural* **Research Institute** will result in the following savings :—

Estimated savings over three years.

	Rs.
Salary of lecturer to relieve Dr. Mehta	8,880
Leave salaries	500
Chaukidar at Agra	432
One peon and bearer at Agra .. .. } One bearer at Agra .. .. .. }	1,476
Stenotypist clerk and store-keeper	2,448
One clerk	1,908
Personal Research Assistant	6,480
Daily allowance to Dr. Mehta while in Simla ..	1,950
Travelling allowances (reduce by say, 50 per cent.)	3,000
	27,074

The actual budget I propose is therefore as follows :—

	Years			
	1st.	2nd.	3rd.	Total.
Recurring.	Rs.	Rs.	Rs.	Rs.
(1) Staff as above proposed	5,496	5,736	6,048	17,280
(2) Electricity—				
Light	125	125	125	375
Power	25	25	25	75
(3) Water	45	45	45	135
(4) T. A.	1,000	1,000	1,000	3,000
(5) Maintenance and contingencies	1,000	1,000	1,000	3,000
	7,691	7,931	8,243	23,865
Non-recurring.				
Estimated cost of transferring glass house (a rough estimate and a maximum figure)	..	..	..	5,000
Cost of alterations at Kanlog (a rough estimate and a maximum figure)	..	..	..	10,000
				38,865*

Nothing in my remarks and proposals is intended to, or can, detract from the value of the work so far done by Dr. Mehta and any apparent bluntness in the above statement is simply due to an endeavour to make the proposals clear and concise.

*It will probably be desirable to take in one or more of the junior Assistants already working in the scheme and as their pay may be above the minimum Rs. 100 in the scale suggested, we may round this figure to Rs. 40,000, of which Rs. 15,000 is entirely due to the transfer (and paid for once for all) and only Rs. 25,000 is for the actual three years running of the scheme.

W. BURNS.

The 6th October 1939.

ANNEXURE II.

AN APPLICATION FROM RAI BAHADUR DR. K. C. MEHTA, M.Sc., PH.D., AGRA COLLEGE, AGRA, TO THE IMPERIAL COUNCIL OF AGRICULTURAL RESEARCH FOR A GRANT OF Rs. 58,314 SPREAD OVER THREE YEARS FOR THE CONTINUANCE OF INVESTIGATIONS ON "CEREAL RUSTS" DURING 1940—43.

Copy of letter No. 308 from Rai Bahadur Dr. K. C. Mehta, M.Sc., Ph.D., Agra College, Agra, to the Secretary, Imperial Council of Agricultural Research, Simla, through the United Provinces Government, Department of Agriculture, Lucknow.

I HAVE the honour to approach you for a grant of Rs. 58,314 spread over a period of three years, for the continuance of investigations on "Cereal Rusts" during 1940—43.

The period of the present scheme of Rust Research, which was sanctioned in the year 1938, will expire on March 31, 1940.

A statement showing the items on which work has been completed and a note stating the technical programme of further work are enclosed herewith.

I hope, Sir, that the Imperial Council of Agricultural Research will kindly sanction funds for the continuance of the investigations in hand for a further period of three years as requested above.

Extension of investigations on Cereal Rusts during 1940—43.

During this period, work on the following aspects will stop :

(i) Oversummering and overwintering of rusts.

(ii) Role of Alternate Hosts, excepting a few inoculations on *Berberis umballata* and *B. pseudumbellata*, if reliable seed and rootwood can be obtained.

(iii) Dissemination of rusts with the help of aeroscope slides, kite slides, wind curves, etc. Curves for 1939-40 and the tabulation of data connected therewith will be completed during the first year of this scheme.

(iv) Survey of rusts in the Provinces.

(v) Morphological studies of *Berberis* leaf except for the first year.

(vi) If no new race is found during 1940—42, the study of physiologic races will be stopped in the third year.

In view of the contraction of work, as outlined above, four posts of research assistants will be retrenched in the first year and two more in the second year.

The amount of relief to the Officer-in-charge has also been cut down considerably. Under this scheme, only one lecturer will be maintained till such time when the work on physiologic races is stopped.

Work on testing the reactions of varieties of wheat and their progenies will continue, as at present, throughout the period of this scheme. Tests will be made with physiologic races of all the three rusts, separately as well as in mixtures, as desired by the wheat breeders concerned, for seedling resistance. Selected varieties will also be tested for adult resistance, as at present. There is ample greenhouse accommodation

between the laboratories at Simla and Agra to cope with the requirements of the Imperial Economic Botanist, the Cerealist, Punjab and the Economic Botanist, United Provinces. The writer hopes also to be able to test wheats from Sind unless the requirements are very heavy, which they are not likely to be, to start with.

K. C. MEHTA.

Technical programme of work on "Cereal Rusts".

During the next three years (April 1940 to March, 1943).

1. *Study of the physiologic races.*—During the last seven years, 1,530 collections comprising the black rust of wheat, barley, some grasses and oats; brown rust of wheat; and the yellow rust of wheat and barley, have been completely analysed. The samples were collected from different parts of the country (hills as well as plains). Six races of black rust of wheat, six of brown rust, nine of yellow rust of wheat and barley and four of black rust of oats have been met with.

It is proposed to analyse 75—100 rust collections per year from selected stations only in the plains and hills during the next three years, in order to pick up any other race or races that may be present in the country.

2. *Tests connected with breeding of resistant varieties of wheat and barley.*—As at present, tests for seedling resistance of different varieties of wheat and barley as well as their progeny to each of the rusts under study will be carried out. It would also be possible to test selected varieties for adult resistance each year, as at present.

This study will be conducted in accordance with the requirements of the Imperial Economic Botanist, New Delhi, the Cerealist, Punjab and the Economic Botanist, United Provinces. On account of the study of a smaller number of rusts collections for physiologic races, more greenhouse accommodation will be available for this work than at present. cultures of all the physiologic races of black rust will be supplied, as contemplated for resting wheats in Peninsula India.

3. *Culture of rusts at the Laboratory at Simla.*—In view of increasing demand, single spore cultures of all the three rusts will have to be maintained in duplicate in future at this laboratory.

Rust cultures will also be maintained at Simla in miniature plots, as at present.

4. *Life-histories of black rusts of wheat and barley.*—Efforts are being made to obtain reliable seed and root-wood of ***Berberis umbellata*** and *B. pseudumbellata*. If available, inoculation experiments will be carried out on the seedlings as well as on plants raised from root-wood of these two species only during the next three years to test their susceptibility to black rust.

5. *Morphological studies of Barberis leaf.*—It is hoped that this study would be complete by March, 1941.

6. *Rust epidemiology.*—The author feels that meteorological data necessary for this study should be obtained by the officers-in-charge of Agricultural Research stations in the Provinces from four or five different stations in each area, Observations on the incidence of rusts should be made locally by the department staff.

The author would be only too glad to help in the co-ordinations of this study.

Estimates of expenditure over the investigations on "Cereal Rusts" during 1940—43 (April 1, 1940 to March 31, 1943).

Particulars.	Scale of pay.	Initial pay upto	1940-41.	1941-42.	1942-43.	Total of each line.
	Rs.	Rs.	Rs.	Rs.	Rs.	Rs.
I.—Establishment—*						
(1) Assistant Mycologist ..	305—20—345	305	3,660	3,900	4,140	11,700
(2) Junior Research Assistant keeper. ..	100—5—110	100	1,200	1,260	1,320	3,780
(3) Personal Research Assistant to the Officer-in-charge.	170—10—200	170	2,040	2,160	2,280	6,480
(4) Research Assistant (for six months, October—March, each year at Agra).	75	75	450	450	450	1,350
(5) Meteorological Assistant (for six months) only in the first year.	75	75	450	..	..	450
(6) Morphological Assistant only for the first year. He will also scrutinize and tabulate data of wind curves.	110	110	1,320	..	..	1,320
(7) Steno-typist, Clerk and Storekeeper.	65—3—75	65	780	816	852	2,448
(8) Clerk and Storekeeper at Simla.	50—3—56	50	600	636	672	1,908
(9) Three bearers at Simla ..	..	..	684	720	756	2,160
One peon and one bearer at Agra. One bearer at Agra for six months each year (October—March).	..	..	468	492	516	1,476
(10) One chaukidar at Agra ..	..	..	144	144	144	432
(11) One part-time sweeper at Simla	..	..	60	60	60	180
II.—Equipment— (Maintenance of greenhouses; replacement of old fans, if necessary, and other articles of equipment.)	..	..	1,000	..	..	1,000
III.—Maintenance and contingent expenses. (Including rent of laboratory at Simla.)	..	..	2,750	2,750	2,750	8,250
IV.—Travelling allowances ..	..	..	2,000	2,000	2,000	6,000
V.—Leave salaries	..	..	150	150	200	500
VI.—To Agra College— (For relief to officer-in-charge in teaching duties.)	240—10—250	240	2,880	3,000	3,000	8,880
Total ..	..	..	20,636	18,538	19,140	58,314

* If during the course of this scheme any new schems are sanctioned for breeding of resistant varieties in the Provinces and States, one more junior Assistant will be required for the laboratory at Simla.

APPENDIX XLIII

Note on Subject No. 20 (a) :—Application from Dr. Radha Kamal Mukerjee *for a grant of* Rs. 15,300 spread over three years for a scheme *for the investigation of changes of crops* and crop rotations in relation *to nutrition in the* United Provinces in recent years.

In November 1937 the Advisory Board considered a scheme from the United Provinces for investigations of crops and crop rotations in relation to nutrition. (*Vide* pages 85, 328, 350-1 of the printed proceedings.) The scheme was referred back to the United Provinces Government for eliciting more definite information regarding the methods to be employed in carrying out the work, the sources of primary information, and the methods of collection and sampling technique proposed to be adopted.

2. Accordingly a revised scheme has been submitted through the United Provinces Government (Annexure). It proposes an investigation into the relations between the size of a peasant's family, its diet requirements and the seasonal distribution of men and animal labour for crops. The scheme involves an expenditure of Rs. 15,300 spread over three years, and has been recommended by the Provincial Agricultural Research Committee. The diets collected will be analysed at the Physiological Laboratory, Lucknow under the supervision of Dr. Burridge, while the tabulation, compilation, weighting and analysis of general trends will be undertaken at the Department of Economics and Sociology under Dr. Mukerji.

3. The proposals are for the consideration of the Advisory Board.

ANNEXURE.

LETTER FROM B. SAHAY, ESQ., I.C.S., DEPUTY SECRETARY TO GOVERNMENT, UNITED PROVINCES, TO THE SECRETARY, IMPERIAL COUNCIL OF AGRICULTURAL RESEARCH, NEW DELHI, No. 3297-A.|XII-A.-66, DATED THE 25TH AUGUST 1939.

With reference to your letter No. F. 171|36-A., dated May 27, 1939, I am directed to forward an application (Enclosure) from Dr. Radha Kamal Mukerji, M.A., Ph.D., and Dr. W. W. Burridge, M.D., for a grant, from the Impeial Council of Agricultural Research, of Rs. 15,300 spread over a period of three years, for the above scheme. More specific information about the mode of working, etc., has been incorporated in the application in accordance with the recommendations of the Standing Soil Science Committee. The Scheme, as revised, has been considered by the Provincial Agricultural Research Committee and a copy of the resolution, on the subject, passed at its last meeting is enclosed for information.

2. As requested in the letter referred to above, a copy each of the two monographs mentioned in the Scheme, *viz.*, Bulletins No. 50 and 59, and of the book " Food Planning for Four Hundred Millions " by Dr. Radha Kamal Mukerji, are sent herewith (not printed). The monographs and the book may kindly be returned when they are no longer required.

3. I am to request that the application may now be placed before the Advisory Board for consideration at its next meeting.

COPY OF RESOLUTION No. 6 PASSED IN THE 16TH MEETING OF THE U. P. AGRICULTURAL RESEARCH COMMITTEE HELD AT THE COUNCIL HOUSE, LUCKNOW, ON AUGUST 10, 1939.

Agenda.	Resoution.
6. Consideration of the revised application from Dr. Radha Kamal Mukerji, M.A., Ph.D., Head of the Department and Professor of Economics, Lucknow University, to the Imperial Council of Agricultural Research, *for a grant of Rs. 15,300 spread over 3 years for a scheme of investigation of changes of crops and crop rotation in relation to nutrition in U. P. during recent years.*	6. Resolved that the scheme be recommended to the Imperial Council of Agricultural Research.

ENCLOSURE.

AN APPLICATION FROM DR. RADHA KAMAL MUKERJI, M.A., PH.D. HEAD OF THE DEPARTMENT AND PROFESSOR OF ECONOMICS AND DR. W. BURRIDGE, M.D. HEAD OF THE DEPARTMENT AND PROFESSOR OF PHYSIOLOGY, KING GEORGE'S MEDICAL COLLEGE, LUCKNOW UNIVERSITY, LUCKNOW TO THE IMPERIAL COUNCIL OF AGRICULTURAL RESEARCH, FOR A GRANT OF RS. 15,300 SPREAD OVER THREE YEARS' SCHEME OF INVESTIGATION OF CHANGES OF CROPS AND CROP ROTATIONS IN RELATION TO NUTRITION IN THE UNITED PROVINCES DURING RECENT YEARS, AS AMENDED IN THE LIGHT OF THE RECOMMENDATIONS MADE BY THE IMPERIAL COUNCIL OF AGRICULTURAL RESEARCH.

IN the United Provinces both crops and agricultural practices have rapidly changed. Heavy yielding crops or better crops of the same kind are grown more and more and an uplift of the standards of both farming and living is noticeable especially in the western and central districts of the Province. Important commercial crops are also expanding, leading to a change in the customary rotations. On the other hand, with an increasing fragmentation of holding, following is gradually excluded and the proportion of double-cropped area tends to be reduced in order to maintain the balance between crop production and soil replenishment. This cannot but affect the acreage under food crops and the dietary of the small holder especially where he has a small surplus. Cane cultivation in some districts also tends to reduce the areas under pea, gram, *masur* and *arhar* and this may reduce the amount of valuable proteins available in the dietary of the smaller grades of cultivations.

Investigations in respect of the relations of agriculture to nutrition have hardly progressed in India. Yet the success of agricultural adjustment can be judged chiefly by the test whether a given acre of holding is now producing more calorific values than the older system and standard of cultivation.

It is proposed to study the changes of crops and crop rotations in three aspects :

(1) The expansion of new varieties of wheat, cotton and sugarcane and of dairy farming and their effects upon the peasants' standard of living and dietary in the Upper Doab.

(2) The expansion of rice, maize and sugarcane and the shrinkage of barley, cheaper millets, and legumes and their effects upon the peasants' dietary in the sub-montane and eastern districts.

(3) The spread of cultivation of vegetables, garden crops and fruits.

Work in progress—Several intensive surveys of agriculture have been conducted by post-graduate students of the Lucknow University and two monographs have been published by the United Provinces Government.

Intensive investigations of small farming and dietary have been recently completed for the districts of Gorakhpur and Meerut. Peasants' diets collected from the various agricultural regions of the United Provinces also being analysed in the Physiological Laboratory at King George's Medical College.

The results of such investigation would be available for this scheme.

Lines of further research.

1. The relations between the size of the peasants' family, its diet requirements and the seasonal distribution of man and animal labour for crops have now to be investigated intensively and consideration given to crop-planning which may insure the most economical use of the land.

2. The effects of new crop rotations involving the raising of different crops or smaller areas of those already grown on the dietary have to be investigated.

3. The kind, sources and amount of food consumed by the peasants family per average holding have to be compared and appraised for the different agricultural regions of the Province.

4. An economical but healthful dietary with a recommended distribution of calories to be worked out for the different regions.

Method of collection and co-ordination of data.

1. Two field investigators will be at work in the villages for three years covering a period of one complete rotation of crops, one in Meerut and the other in Gorakhpur Division in the first instance, these presenting striking agricultural and dietetic contrasts.

2. The villages in each district will be classified according to :

(*a*) Soil conditions, *e.g.* loam, sand, clay, etc.

(*b*) Agricultural water supply.

(*c*) Dominant castes, *e.g.* Muraos, Pasis, Thakurs, Chamars, Kurmis, etc.

(*d*) Size of holdings.

Villages exhibiting homogeneous conditions with regard to these factors will be grouped together and a few villages would be selected for crop survey by random sampling from each group. The data then would be compiled and due weightage given according to the proportion of each group.

3. The investigators will collect the primary data from the cultivators themselves and check these locally and with reference to village registers or other records. Field to field and house to house inquiries will be undertaken for this purpose.

4. The diets collected will be analysed by an investigator at the Physiological Laboratory, Lucknow, under the supervision of Dr. W. Burridge. Differences in the dietaries will be examined from season to season with its complement of crops and foods and all appraised with reference to their food values.

5. Tabulation, compilation, weighting and analysis of general trends will be undertaken at the Department of Economics and Sociology under the supervision of Dr. Radha Kamal Mukerjee. Some members of the department have already been at the Institute of Statistics, Presidency College, Calcutta, whose advice will be sought for statistical presentation.

Cost of the scheme.—No non-recurring expenditure will be involved.

COST OF THE SCHEME.

Recurring expenditure per annum.

	Rs.
(1) Rupees 100 per mensem for a field investigator in Meerut district.	1,200
(2) Rupees 100 per mensem for a field investigator in Gorakhpur district.	1,200
(3) Rupees 150 per mensem for an investigator at the Physiological Laboratory.	1,800
(4) Rupees 480 (Rs. 240 annually for each field investigator as travelling allowance).	480
(5) Contingencies	420

The investigation would be completed in three years at a total cost of Rs. 15,300.

APPENDIX XLIV.

Note on Subject No. 20 (b) :—Application from Professor B. N. Singh and Rai Sahib J. N. Rakshit for a grant of Rs. 82,810 spread over five years for carying out investigations of perfume-yielding plants of India.

The attached application (Annexure) received from the Government of the United Provinces, for a grant for carrying out investigations of perfume-yielding plants in India is submitted for consideration. The scheme is for a period of five years and involves a total expenditure of Rs. 82,810 (Rs. 70,560 recurring and Rs. 12,250 non-recurring). The Botanical and Physiological aspects of the scheme are to be conducted at the Institute of Agricultural Research, Benares Hindu University under the supervision of Dr. B. N. Singh. The chemical aspect of the scheme will be undertaken at Ghazipur by J. N. Rakshit.

The scheme has been recommended by the Provincial Agricultural Research Committee.

2. The proposals are for the consideration of the Advisory Board. They will first be examined by the Botanical and Physiological Committee, whose report will be submitted to the Board in due course.

ANNEXURE.

COPY OF LETTER No. 3302A|XIIA-685, DATED THE 31ST AUGUST 1939, FROM THE DEPUTY SECRETARY TO THE GOVERNMENT, UNITED PROVINCES, LUCKNOW, TO THE SECRETARY, IMPERIAL COUNCIL OF AGRICULTURAL RESEARCH, NEW DELHI.

I am directed to forward for the consideration of the Imperial Council of Agricultural Research, a copy of an application (Enclosure) from Professor B. N. Singh, D.Sc., and Rai Sahib J. N. Rakshit, F.I.C., F.C.S., for a total grant of Rs. 82,810 (Rs. 12,250 non-recurring and Rs. 70,560 recurring spread over a period five years) for carrying on investigations of perfume-yielding plants in India. The Scheme was considered at the last meeting of the United Provinces Agricultural Research Committee, and a copy of the resolution passed by it, on the subject is enclosed for your information. I am to request that the aforesaid application may kindly be placed before the Advisory Board at its next meeting.

COPY OF RESOLUTION No. 10 PASSED IN THE 16TH MEETING OF THE U. P. AGRICULTURAL RESEARCH COMMITTEE HELD AT THE COUNCIL HOUSE, LUCKNOW, ON AUGUST 10, 1939.

Agenda.	*Resolution.*
10. Consideration of a scheme by Dr. B. N. Singh, D.Sc., Irwin Professor of Agriculture, Benares Hindu University Benares, and Rai Sahib J. N. Rakshit, F.I.C., F.C.S., Ghazipur, for Botanical, Agricultural and Chemical investigations of perfume yielding plants in India at a total cost of Rs. 82, 810 in five years.	10. Resolved that the Scheme be recommended to the Imperial Council of Agricultural Research.

ENCLOSURE.

SCHEME ON THE BOTANICAL, AGRICULTURAL AND CHEMICAL INVESTIGATIONS OF PERFUME-YIELDING PLANTS IN INDIA TO THE IMPERIAL COUNCIL OF AGRICULTURAL RESEARCH, FOR A TOTAL GRANT OF Rs. 82,810 (NON-RECURRING Rs. 12,250, RECURRING Rs. 70,560) SPREAD OVER A PERIOD OF FIVE YEARS, FROM PROFESSOR B. N. SINGH, D.SC., IRWIN PROFESSOR OF AGRICULTURE UNIVERSITY PROFESSOR OF PLANT PHYSIOLOGY, HEAD OF THE INSTITUTE OF AGRICULTURAL RESEARCH, BENARES HINDU UNIVERSITY AND RAI SAHIB J. N. RAKSHIT, F.I.C., F.C.S., OPIUM DEPARTMENT, GHAZIPUR.

INTRODUCTION.

NATURE has been extremely bountiful to India in respect of aromatic flowers, fruits, woods, roots and grasses. Out of about 170 families of aromatic plants, it possesses almost 100 families with a total of more than 800 perfume-yielding plants distributed in different parts of the country over its wide range of climate and heterogeneous soil. It is no wonder, considering this natural advantage, that the perfume industry has flourished in India from quite an early date. Interesting references to perfumes and their extensive use by princes and common people alike for dressing the hair, for anointing the body, using perfumed water for the bath, and, perfumed vapour for scenting the atmosphere of the rooms are found in the Pali literature, the epics, *Samhitas* on medicine, *Kamasutra*, and other works of antiquity. Indeed, Indian perfumes, unguents, and similar articles of luxury were then in such great demand that they were among the main items of export to the outside world. For instance, Ktesias of Knidos, who was physician to Artaxexes Mnemon in 400 B. C., refers to cinnamon oil, sent from India, which had a most exquisite fragrance. When Hippalus made in 47 A. D. the important discovery of the regularity of the monsoons in the Indian Ocean, trade between the Red Sea ports and India got an immense impetus, and the wealthier Romans began to spend recklessly on Indian drugs, spices, condiments, and cosmetics. This drew forth a vigorous protest from Pliny, who laments the huge annual drain of Roman gold to India (*Nat. Hist.*, XII, 18). We further learn from the anonymous author of the *Periplus* that the exports of Sind included *Costus*, an amatic plant from Kashmir, used for perfumes; and lycium or berberry, a cosmetic fashionable in Rome. Religious and funeral customs in Rome also encouraged the consumption of aromatics in considerable quantities. It is said that Nero burnt at the funeral pyre of Pappora in 66 A. D. so much of aromatics that for one year men had to go without them. We have no records to indicate how long India continued to maintain a position of pre-eminence in perfumery, but it is certain that the industry was in a prosperous condition during the mediaeval times. This was so partly because some of the Muslim monarchs were themselves fond of scents. Thus Abul Fazl says in the *Ain-i-Akbari* regarding Akbar : " His Majesty is very fond of perfumes ....The court wall is continually scented with ambergris, aloewood, and compositions according to ancient recipes, or mixtures invented by His Majesty ; and incense is daily burnt in gold and silver censers of various shapes, while sweet-smelling flowers are used in large quantities. Oils are also extracted from flowers and used for the skin and

hair". The richer classes scented the atmosphere of rooms by perfumed vapours and even had their bath with perfamed waters. One is at once reminded here of the interesting tradition that the *Atar* of Roses, was the chance discovery of Nur-i-Jehan while she was in her *Hamam*. The Indian perfumes were still the rage in foreign lands. Thus Queen Elizabeth in the 16th century is known to have extravagantly used the Indian perfumes, while Mary, Queen of Scots, used to bathe in Indian perfumed wine. Indeed, in the late 18th century the export of Indian perfumes to England went up to such an extent that the English Parliament in 1770 passed an Act laying stress upon Indian scents thus : "That women of whatever age, rank, profession or degree, whether virgins, maids or widows that shall from and after such Act, *impose upon, seduce and betray into matrimony, any of His Majesty's subjects by the scents* . . . shall incur the penalty of the law in force against witchcraft and like misdemeanours and that the marriage, upon conviction shall stand null and void".

Such was the trade that India had with the rest of world in Indian perfumes upto the later part of the 18th century. With the advancement of scientific knowledge abroad and with the advent of synthetic perfumes, the then flourishing Indian industry began to lose her grip over the world market and a position was reached at the dawn of the 20th century when France and Germany captured the world market for the aromtics, while the Indians, traditionally used to consuming large quantities of perfumes in a variety of ways from cradle to crematorium, stand today as among the biggest consumers of foreign perfumes leaving behind the remnants of their own industry at places like Jaunpur, Ghazipur, Kanauj and Delhi. *Our perfume industry has gone down so much that we are being offered foreign perfumes adulterated with bases of diluents as Indian atars and perfumes. It is indeed deplorable that after dealing i nIndian perfumes with the world for centuries past we should be importing it even from countries like Japan which is proverbially known to abound in flowers without perfume. On an average, Indian import of synthetic perfumes* and ready-made blends easily amount to over Rs. 50,00,000 annually, the largest import being from Japan and Germany. A reference to the statistics of import of essential oils alone in India from 1913—1935 will show that there has been a steady increase in our import from Rs. 7,70,000 to Rs. 14,60,048 as given below :

Import of essential oils in India in rupees.

Year.	Import.
1913-14	7,70,000
1922-23	8,00,000
1923-24	10,70,000
1924-25	11,00,000
1925-26	14,90,000
1932-33	14,86,241
1933-34	13,56,337
1934-35	14,60,048

Until recently, perfume, essential oils, washing and toilet soaps worth several lakhs of rupees were imported in this country, but with the advent

of such indigenous industries as soap and oil, the establishment of medicinal and pharmaceutical works and awakening in the science of pharmacognosy in the country there is the increasing possibility of consuming not only the present resources of the indigenous essential oils but also the possibility of extending the are of perfume yielding crops to cope with the increasing demand of perfume and essential oils.

At the present day in countries like Germany and Belgium essential oil gardiens have proved a great success. France, Soviet Russia and United States of America have also developed good deal of interest for the cultivation of perfume-yielding plants. Recently India alone exported several thousand sandal wood sapplings to Russia from Mysore and it is reported that over 56,000 graduates of both sexes have been shifted to special colonies where these Indian plants will be cultivated. In Australia 20 years back some sandal wood sapplings were exported from Mysore and plantations have extended to such an extent that Australia herself began to manufacture sandal wood oil which, though of inferior quality, has been recognized by B. P., and as a result of which the price has gone up from Rs. 6 to Rs. 12 per pound. In Grasse (France) where climatic and soil conditions rendered the growing of even small crops of lavender difficult in the past, cultivation in green houses has rendered possible the supply of abundant lavender and other fragrant flowers to the world market. There is no reason why in India, which is an epitome of climate, seasons and soils, not only the extension of the recent perfume-yielding crops is possible but also the successful cultivation of foreign plants not introduced in this country so far. From this it would be clear that increased cultivation of perfume-yielding grasses, plants, and trees would be of great advantage inasmuch as it would give the cultivator a secondary crop and will also give impetus to the development of indigenous perfume industry which, if run on profitable lines, might cut down considerably the import of these perfumes from other foreign countries. The details of the cost of production of rose and lemon grass are given in Appendices A and B.

The cultivation of such crops has other significant bearings on the physical and economical conditions of people. Beautiful sanatoriums and convalescent houses can be constructed amid tracts of land abunding in flowers rich with perfume as is possible in places like Baramana and Hasayan (Aligarh district) side by side, distillation plants may be set up in such village and forest areas for the extraction of essential oils from the perfume-yielding crops cultivated for the purpose. This will mean the stoppage of the influx of village people to cities to some extent and reinhabitation of villages by educated citizens and providing the village people with such side-jobs as for example the construction of packing cases and tin boxes for the transport of oils and perfumes from there to different places, besides finding for the cultivator a good and profitable market for perfume-yielding plants.

Work in progress in India.

Of the various attempts made in the direction of establishing such distillation plants in the different parts of the country, mention may be made of the work of Sardar Pooran Singh on the extraction of turpentine oil from pine trees and sandal wood oil from Indian sandal wood at the Forest Research Institute, Dehra Dun and the establishment of a distillation plant

in Gwalior where he also grew palma rosa grass. The next successful attempt was made at Bangalore in 1916 where a distillation plant was put thus saving the export of sandal wood worth several lakhs of rupees.

In the United Provinces Sir Jwala P. Srivastava established "The Indian Essential Oil Factory" in 1918 which had to close for various reasons. The first organized attempt in the cultivation and distillation of perfume-yielding plants was made by the Benares Hindu University and its various institutions like the Ayurvedic gardens, the Institute of Agricultural Research, the Industrial Chemistry Department and the Department of Pharmaceutics. In 1931 the Industrial Chemistry Department of the University made successful attempts at collecting statistical records, when Mr. Sadgopal toured throughout the different parts of the country to investigate the possible resources of raw material.

In March, 1932 the first All-India Perfumer's Conference was organized and held at Benares under the Presidentship of Hon'ble Raja Sir Motichand, Kt., C.I.E., who deplored the then state of this industry and drew attention for the establishment of distillation plants in different parts of the country. In 1934 was also established "The Hindustan Aromatic Company" situated at the gate of the Benares Hindu University, which took up the manufacturing part of the essential oils, many of which like Kewada oil were unknown to Europe.

At the experimental farms of the Institute of Agricultural Research perfume-yielding plants, *e.g.* roses, lemon grass, jasminums, narcissus besides other species have been successfully cultivated for the past several years on a systematic scale, and the extraction and distillation along modern scientific lines have been in progress in the Department of Industrial Chemistry. The Ayurvedic and Pharmaceutics Departments of the University have also been engaged for some time past in the preparation of alkaloid and other drugs from several medicinal and perfumeyielding plants the cultivation of which on a large scale is being undertaken in the University Ayurvedic Gardens. At Ghazipur Mr. Rakshit has recently devised simple stills for cottage industry work, and claims to have produced certain new promising selections of ocimum, jasminums and lemon grass.

The present scientific status of the problem.

In order that this lost indigenous perfume the industry in which for centuries India held the supreme position in the world be developed, cultivation of perfumeyielding plants and grasses must at once be started in suitable tracts, and suitable methods need necessarily be developed for the extraction of oils and perfumes along scientific lines. Side by side the factors determining the quantity and quality of yield of essential oils from different plant species need investigation. It is now well recognized that natural perfumes present one of the most marvellous phenomenon of plant metabolism. Fragrance in flowers is considered to be due to minute traces of essential oils present, some times in its free state and occasionally in the form of a glucoside which gets decomposed in the presence of an enzyme or a ferment under suitable conditions. It is also well-known that besides the specific differences, the nature of perfume material obtained from different plants depends upon the variety of plant, the soil characteristics including the nutritive conditions under which different species

grow, and the climatic complex of which temperature is the most important. Messnard (1894) indicated that essential oils are degradation products of chlorophyll. Resins are also known to precede (Mer. 1887) or follow the synthesis of essential oils in green leaves. (Tschirch 1906) Charabolt and Lalone definitely established that in many cases the essential oils result from the assimilative work of chlorophyll and that by diffusion the essential oils go from leaf to stalk and thence to flowers. They are stored there as odour is considered to be more effectve than colour for attracting pollen insects. The oils are in certain cases known to act as prospective agents against certain plant parasites.

McNair (1929) noted that the oils are found in at least 83 out of 277 families listed by Engler and Prantle. Some 318 oils have been studied from these 83 families. Oils often provide specific physical and chemical properties of taxonomic value, through comparisons of I numbers, saponification value and specific gravities. There is close agreement between the oils of the different species of a genus. Tropical and sub-tropical plants are more likely to have oils with higher melting points than the in temperate climate. He (1932) further mentions that volatile oils are found in 29 per cent. of the angiosperm and gymnosperm families. All of them are more tropical than temperate in distribution. It seems quite likely that the acids, alcohols, esters and hydrocarbons of volatile oils have higher molecular weights when of temperate origin than when of tropical origin. Various other physical and chemical properties seem to vary with climate.

Atkins (1930) while studying the influence of fertilizers noted that results with roses suggest possible response to N-fertilizers in greater plant growth and also in greater susceptibility to winter injury. The results suggest that the growth rate is governed more nearly by such general climatic conditions as moisture and temperature and stored food materials than by fertilizer application. Interesting results have been obtained by Tulaikov in this connexion. He observed no increase in the yield of oil by addition of sulphate, but the presence of chloride or nitrate has a strong negative effect. The presence of sodium sulphate in soil solution may increase the yield as compared to normal. Soil moisture from 60—80 per cent. of the water holding capacity considerably increases the yield but with further increase in moisture it may decrease. The H-ion concentration of the medium influences the oil content to a considerable extent. Likewise the time of seeding exercises a good deal of influence upon the percentage of oil.

Barner (1938) has recently studied the influence of excessive K, N or P fertilization on certain perfume-yielding plants and concludes that the etherial oil content increases parallel with the increase in foliage ; but there was only a slight increase in oil content in plants fertilized with a full nutrient solution, containing only half as much K, N or P although the increase in foliage was great. L'Vov and Artsikhovskaia (1933) while attempting to study the influence of carbohydrate deficiency on the content of essential oils in *O. majorana* and *S. sclarea* observed an increase of 50 per cent. and even more in the oil content of plants when protected from light and their organs examined weekly at various stages of development.

Zamoteav (1930) while studying the essential oil content of coriander in relation to age points to the fact that with the maturity of the fruit

the oil content increases until shedding. The content of oil per weight unit of fruits depends at any period of maturity on the correlation of the amount of volatile oil and the absolute weight of fruits. The weight of the fruits increases with age ; but the yield of volatile oil per weight unit of fruits decreases with age while for an equal number of them, it remains unchanged. He concludes that the increase of yield per unit area with the age of the fruits takes place at the expense both of accumulation of nutritive substances and number of normally developed flowers.

Ivanov et al. (1929) observed varietal differences in quantity of essential oils in coriander and anise like those when the plants were grown at different geological locations.

Martin and Tattersfield (1934) while studying the pyrethrin content of flowers of plants *C. cinerariaefolium* observed that the insecticidal value of pyrethrin flowers may be improved by plant selection followed by vegetative propagation, whereas Roets (1937) stresses the importance of pruning and cutting for increasing the concentration of icterogenin in both the leaves and the root cortex of pears. He emphasizes that the climatic conditions may influence the synthesis and translocation within the plant tissues.

While studying the production and translocation of volatile oils and resins in the hop, Moreau (1926) concludes that the essential oils and resins are not formed by transformation of the cell walls (Tschirch), by transformation of tannins (Politis) ; but are produced directly from the cytoplasm, whence they migrate to the final position. He advanced the hypothesis that the lipoids of the mitochondria may affect the permeability of the walls and thus permit the migration of the resins.

Shchepkina (1928) noted that resin was found in the chlorophyll parenchyma of tobacco leaves. The presence of resins in the parenchyma cells suggests that these rather than resin glands are like the seat of its elaboration and that the glands are simply store houses for resins and eitherial oils which latter may also be present in the external tissues such as epidermis, guard cells, trichomes, etc. The epidermis, hypodermis, stomata and surrounding cells contain distinctly more etherial oils in winter than in summer.

The factors controlling their formation and distribution, however, are not well understood and aside from the stray observation of some of these workers no systematic study seems to have been conducted on the botanical or agricultural aspect of these plants. It is therefore felt that scientific research need necessarily precede any industrial revival of the perfume trade in India. It is proposed therefore to confine attention in the first instance to such plant types only as are recognized to be valuable sources of essential oils and to determine the optimal conditions under which maximum yield of oils might be obtained.

Relevant information as regards nine such species is given in table 1. It would appear from the figure of consumption in India and from those of export and import for the various oils that these species, e.g. *Cymbopogon citratus* or lemon grass, *Cymbopogon* nardus (Rendel), *Cymbopogon maritini*, Ginger grass, *Vitiverta* (Kus.,) *Rosa damascena*, Jasminums, *polyanthus tuberosa* and *Narcisus* sp., that the cultivation of these crops would greatly add to the income of agriculture in the country. The task of having a complete survey of different perfume-yielding plants may be

deferred for the present, and is left to be done with the co-operation of the Forest Research Institute and the Botanical Survey of India. Whenever reports of such species are available before launching upon a detailed programme of cultivation of these plants general observations on the soil and climate and habit of such plants may have to be made through the co-operation of these departments.

Proposed lines of research.

The work will primarily be confined to three different aspects, viz. (i) Botanical and Physiological, (ii) Agricultural, and (iii) Chemical. The Botanical and Agricultural aspects are proposed to be conducted at the Institute of Agricultural Research, Benares Hindu University by Professor B. N. Singh, where adequate facilities for advanced agricultural and botanical research already exist. The chemical aspect will be undertaken at Ghazipur by J. N. Rakshit, Esq., F.I.C., F.C.S., of the Opium Department.

The following is the detailed programme of work :

(i) Botanical and Physiological.

(1) Selection and isolation of botanically pure strains from the promising species and varieties already available with desirable degree of variations in their perfume-yielding capacity with special reference to quality and quantity of perfume or essential oil.

(2) Study of the methods of propagation and their influence upon the oil content of the plants under investigation.

(3) Inter-relation between growth and chlorophyll content, oil percentage and the photosynthetic rate.

(4) Translocation of oils from leaves to other organs and the factors determining the same.

(5) Diurnal, nocturnal, seasonal and age-acruing variation in oil content.

(ii) Agricultural.

(1) The influence of different levels of N., P. and K. both singly and in combination upon the yield of essential oils and the relation between the availability of these nutritive ingredients and the growth of the plants under investigation.

(2) Investigation of the time of application of different levels of N., P. and K. which offer most promise.

(3) Study of the responsiveness of the perfume-yielding plants and grasses to various organic manures, both bulky as well as concentrated.

(4) Influence of spacing, manuring and irrigation upon the oil content of the plants, pH. value of the soil and soil nitrogen content.

(5) Effect of periodical cuttings of grasses upon the total yield of essential oils.

(iii) Chemical.

(1) Improvement on the primitive and the wasteful methods of extraction of perfumes from grasses and flowers.

(2) Synthesis of high-class perfumes from grass oils and synthesis of medicinal and standard derivatives.

(3) Chemical analysis of oil at all stages of growth of grass to ascertain the stages at which the best quality of oil is obtainable.

(4) A study of the keeping properties of oils.

(5) Standardization of methods and oils (for purity tests by B. P.)

In the programme outlined above the entire chemical work dealing with the industrial aspect of the problem is proposed to be conducted at Ghazipur. However, in view of the importance of finding out the correlation between various treatments and the output of the essential oils, extraction and outturn of oils need to be conducted at the Institute of Agricultural Research, Benares Hindu University as well. Similarly facilities for growing plants at Ghazipur for conducting certain experimental portions such as (iii) (i) need necessarily be provided.

SCHEDULE OF EXPENDITURE.

Item No. 1.

Estimates of expenditure over the investigation on the Botanical and agricultural aspects of perfume-yielding-grasses, plants and trees at Benares Hindu University.

RECURRING.

Particulars.	1939-40.	1940-41.	1941-42.	1942-43.	1943-44.	Total.
I.—PAY OF ESTABLISHMENT.	Rs.	Rs.	Rs.	Rs.	Rs.	Rs.
(*i*) Botanical Assistant Rs. 150—10—220.	1,800	1,920	2,040	2,160	2,280	10,200
(*ii*) Agricultural and Chemical Assistant Rs. 110—10—150.	1,320	1,440	1,560	1,680	1,800	7,800
(*iii*) Typist clerk, accountant and store-keeper Rs. 40—5—75.	480	540	600	660	720	3,000
(*iv*) Laboratory bearer Rs. 15—1—20.	180	192	204	216	228	1,020
(*v*) Trained mali Rs. 25—1—30.	300	312	324	336	348	1,620
II.—MAINTENANCE AND CONTINGENT EXPENSES.						
(*i*) Laboratory grant for chemicals and glass goods	500	500	500	500	500	2,500
(*ii*) Manures and fertilizers	100	100	100	100	100	500
(*iii*) Labour and cultural expenditure.	1,000	1,000	1,000	1,000	1,000	5,000
(*iv*) Periodicals and books .	200	200	200	200	200	1,000
(*v*) Contingent expenses ..	120	120	120	120	120	600
(*vi*) Seeds and cuttings ..	900	50	50	50	50	500
III.—COMPENSATOY ALLOWANCE.						
(*i*) House allowance ..	900	900	900	900	900	4,500
(*ii*) Car allowance ..	900	900	900	900	900	4,500
IV.—Travelling allowance ..	500	500	500	500	500	2,500
TOTAL	8,600	8,674	8,998	9,322	9,648	45.240

NON-RECURRING.

	Rs.
(1) Incubator for drying materials	850
(2) Research microscope with accessories for special botanical work	1,500
(3) Abbe Refractometer	600
(4) Portable Potentimeter for pH determination	450
(5) Soil nitrogen tester	150
(6) Apparatus for chlorophyll estimation	400
(7) Apparatus for measurement of photosynthesis under natural conditions	650
(8) Vaccuum distillation apparatus	400
(9) Layout of irrigation pipes, construction of 500 cement concrete pots and 20 lysimeters	1,250
TOTAL	6,250
Total, recurring and non-recurring ..	51,490

Rupees fifty-one thousand-four hundred and nonety only).

A small compensatory allowance of Rs. 150 per month had of necessity to be included in the items of expenditure on items (1) and (2) of the proposed lines of research under the heads house and car allowance of the research officer at the headquarters of the scheme at the Benares Hindu University. The research officer has his own house and people in the city where he could put up, but for the scheme work and in connexion with another scheme sanctioned by the Imperial Council of Agricultural Research he has to stay in the University by paying rent of the house occupied by him. The Experimental Farms are situated at a distance of two to three miles from the residential quarters which means a lot of running about from morning to late at night and thus a small compensation by way of car allowance has been included.

The University working session generally lasts for a total period of 7½ months, allowing about 4½ months as holidays for the professorial staff for going out of station. The scheme work already in hand and the one presented now requires 12 months stay at the University taking away therefore that period which is allowed for rest and other work. No allowance is however asked for as regards the 4½ months that one would thus devote to scheme work. The Imperial Council of Agricultural Research is already considering the question of these allowances independently of this scheme. If these are sanctioned in that connexion this amount will not remain here.

Only one hand, to work as clerk, typist, accountant and store-keeper has been demanded under the pay of establishment item No. I (iii) to look after the typing of the literature reports and correspondence in connexion with the scheme and also to maintain the accounts stock registers, etc.

Receipts from the area to be cultivated under the scheme will, of course, be credited to the account of the Imperial Council of Agricultural Research.

ITEM No. 2.

Estimated cost of establishing a research station at Ghazipur for the development of perfume-yielding grasses, plants and trees.

NON-RECURRING.

	Rs.	
Building—Laboratory including carpentry work	500	
Total ..	500	
Machines—Gasolene engine	500	
Electric Generator	500	
Vacuum pump	500	
Stills and condensers	800	
Total ..	2,300	
Experiment—Implements and farm equipment	200	
	Rs.	
Scientific apparatus—		
(i) Balance, sartorius	300	
(ii) Hygrograph	200	
(iii) Hydrometer, 0.7 to 1.9	30	
(iv) Electric combustion furnace	450	
(v) Thermometers	20	
(vi) Vacuum distillation apparatus	400	
(vii) Polarimeter, Schmidt and Haensch, with electric sodium lamp.	600	
(viii) Refractometer, Abbe	600	
(ix) Flash point testing apparatus	150	
(x) Gas analysis apparatus complete	250	
Total ..	3,000	
		3,000
Total, non-recurring		6,000

RECURRING.

Items.	1st year.	2nd year.	3rd year.	4th year.	5th year.	Total five years.
	Rs.	Rs.	Rs.	Rs.	Rs.	Rs.
1. PAY OF ESTABLISHMENT—						
One Chemical Assistant Rs. 150—10—220.	1,800	1,920	2,040	2.160	2,280	10,200
One fieldman Rs. 35—½—40 ..	420	426	432	438	444	2,160
One laboratory attendant Rs. 12—2—22.	144	168	192	216	240	960
One typist clerk and store-keeper Rs. 40—5—75.	480	540	600	660	720	3,000
Total, pay of establishment ..	2,844	3,054	3,464	3,474	3,684	16,320
2. ALLOWANCES—						
Travelling allowance	500	500	500	500	500	2,500
3. SUPPLIES AND SERVICES—						
Running charges of laboratory ..	500	500	500	500	500	2,500
Running charges of experimental station.	300	300	300	300	300	1,500
4. House rent	200	200	200	200	200	1,000
Rent of land	300	300	300	300	300	1,500
Total, supplies and services ..	1,300	1,300	1,300	1,300	1,300	6,500
TOTAL, RECURRING ..	4,644	4,854	5,264	5,274	5,484	25,320

A typist is needed to copy from scientific publications for the purpose of research, to type reports for Imperial Council of Agricultural Research, and other scientific correspondences. A fieldman is needed to do these large-scale cultivations.

Sale of oils and their derivatives after semi-large and large-scale experiments will be credited to Imperial Council of Agricultural Research. It may roughly amount to Rs. 500 per year on average.

The total amount in connexion with the schedule of expenditure over items 1 and 2, is Rs. 82,810 (recurring Rs. 70,560, non-recurring Rs. 12,250) spread over a period of five years.

STATEMENT A.

Approximate cost of production of one acre of Rose crop within the University area.

Particulars.	1st year.	2nd year.	3rd year.	4th year.	5th year.
	Rs.	Rs.	Rs.	Rs.	Rs.
(1) Ploughing and preparation of land.	10	..	..	..	..
(2) Manure and manuring ..	25	15	15	15	15
(3) Plant	25	..	..	..	..
(4) Planting charges	5	..	..	..	..
(5) Hoeing and weeding ..	10	5	5	5	5
(6) Pruning charges	..	3	3	3	3
(7) Irrigation charges	20	20	20	20	20
(8) Land rent..	15	15	15	15	15
(9) Flower collection charges ..	5	8	10	10	10
Total, expenditure ..	115 =385	66	368	68	68
Average per year	=77	..	..	..	..
Income	20 =1,020	100	300	300	300
Average per year	=204	..	..	..	..

STATEMENT B.

Cost of production of one acre of lemon grass at the Experimental Farms ofthe Institute of Agricultural Research, Benares Hindu University

Particulars.	1st year.	2nd year.	3rd year.	4th year.	5th year.
	Rs.	Rs.	Rs.	Rs.	Rs.
(1) Ploughing and preparation of land.	5	..	..	..	..
(2) Manure and manuring ..	25	20	20	20	20
(3) Seed (cuttings)	10	..	..	..	..
(4) Planting charges	5	..	..	..	..
(5) Hoeing and weeding ..	5	3	3	3	3
(6) Irrigation charges	15	10	10	10	10
(7) Harvesting charges.. ..	6	6	6	6	6
(8) Land rent..	12	12	12	12	12
Total, expenditure ..	83 =287	51	51	51	51
Average per year	=57	..	..	..	..
Yield per acre (gross wt.) ..	Mds. 200	Mds. 400	Mds. 400	Mds. 400	Mds. 400

TABLE I.

Relevant information regarding habit, distribution, medicinal uses, area under cultivation, export, import, consumption in India. Yield of essential oils, average price per lb., etc. of certain more important perfume-yielding plants in India.

Species.	Habit of growth.	Distribution and area under cultivation.	Use.	Export.	Import.	Consumption in India.	Yield of essential oils.	Average price per lb.	Remarks.
Cymbopogon citratum **Stapf.** (***Andropogon citratus*** **D.C.) Lemon grass.**	A large, coarse, glaucous grass, rarely bearing flowers, throwing up dense fascicles of leaves from a short sparingly branched rhizome.	All over India and eastwards to Burma.	Root useful in burning sensations, bilious fevers, sweats diseases of the blood. Root infusion stimulant diaphoretic, etc. Leaf and pulp rich in oil.	7,000 to 11,000 cwt.	*Nil.*	22,000 cwt. (for soap alone).	700 lb. wet grass yields 22 oz. six per cent. yield on dry weight.	Re. 1	
Vetiveria zizanioides **Stapf.** (***Andropogon muricatus*** **Retz.)** ***Khus-Khus.***	Densely tufted perennial grass root stock branching with spongy aromatic roots.	Common in every part of coast (Coromandel, Mysore) also Bengal and Burma Cuttack, Punjab, North-West Provinces, Kumaun, Rajputana and Chhota Nagpur.	Roots contain resin and volatile oil. Roots made into aromatic scented mats grass suited for paper manufacture, root infusion given as fabrifuge, regarded as stimulant diaphoretic, essence used as tonic.	15,000 lb.	15,000 lb.	30,000 lb. (Soap, oil) medicine, etc.	0·8 per cent.	Rs. 30 per lb.	
Cymbopogon nardus **Linn. (*Andropogon Nardus* Lnn. *C. flexuosus Nees*) *Ganjni.***	A tall grass copiously branched above forming nodding panicle.	Throughout India specially hotter parts, common in plains and hills of Punjab and North-West Provinces.	Leaves contain oil with strong aromatic odour oil stimulant, carminative, anti-spasmodic and diaphoretic.	From Ceylon 12,000 cwt.	19,000 cwt. oil.	20,000 cwt.	25—30 lb. per acre in summer crop, 6—15 lb. in winter, 3 oz. oil from 1 cwt.	Re. 1 to to 1-8-0	
Rosa damascena **(Mill. Gulab).**	Attains 1·5 m. height, stem with stout booked prickles, mixed with glan-	Cultivated all over India	Flower laxative, expectorant, cardiotonic, good for eyes, lungs, stomattis,	..	10 lb. 100 per cent. essential oil.	428,000 mds. of flowers yearly.	..	Rs. 2,400	

	dular bristles.		kidneys, and intestinal affections; oto prepared from flowers.					
Jasminum grandiflorum, Linn. (*J. Aureum*, Don) Chameli.	A large scandent, glabrous shrub.	Sub-tropical, North-West Himalaya, 2,000 to 5,000 feet salt range, Trans-Indus, Kumaun, Rajputana, Central India often cultivated.	Medicinally useful in stomattis diseases of head, teeth and eye, diseases of blood leprosy, ulcers, etc., root purgative, soporific used for *atar*.	..	..	Chameli 12,000 mds.	..	..
Polianthes tuberosa Linn. Gul shabbo.	Cultivated in India..	Different parts of India	Flowers considered diuretic and emetic bulbs remedy for gonorrhoea, flowers used for oil and perfume extraction.	..	80 lb. oil.	12,000 to 15,000 lb.	..	120
Cymbopogon martini Palma rosa.	..	..	..	..	..	..	..	..
Cymbopogon martini *Palma rosa* Bhotia.	..	*Amraoti*, Gorakhpur, Lyallpur, Central Provinces and Berar, Simla, Almora, Hyderabad, Deccan.	For oil exraction ..	27,000 lb. biggest exports.	..	25,000 lb.	1·5 per cent. dry weight.	5
Ginger grass Saufia..	..	..	Entire grass used for extracting oil which is greenish in colour.	60,000 lb.	..	10,000 lb. in saops snuff tobacco.	2 per cent.	4
Giranium (*Pelargonium odoictium* L.).	..	Nilgiris	Oil extraction ..	..	25,000 lb.	25,000 lb. cen5.	2·5 per cent.	13
Narcisus odourous L.	..	..	*Ditto*	..	2,000 lb. compounds.	..	..	30
Ocimum sanctum Tulsi.	Somewhat *shruby* herbaceous annual.	Throughout India, cultivated.	Diseases of heart and blood, leucoderma, strangury, antipyretic decoction useful for cough.	..	..	..	..	..

APPENDIX XLV.

Note on Subject No. 20 (c) :—Application from the Government of the United Provinces for a grant of Rs. 34,334 spread over five years for research on breeding rust resistant varieties of wheat and barley for the plains.

A copy of a scheme received from the Government of the United Provinces is appended (Annexure). It provides for research on breeding rust resistant varieties of wheat and barley for the plains involving a recurring expenditure of Rs. 34,334 spread over five years. The scheme has been recommended by the United Provinces Agricultural Research Committee. In this connection it may be mentioned that the Wheat Committee at its meeting held in May 1939 adopted the following resolution :—

"This Committee recommends that more research work should be undertaken to breed rust resistant varieties".

2. The Scheme is for the consideration of the Board. It will first be considered by the Botanical and Physiological Sub-Committee whose report will be circulated to the Board in due course.

3. The Botanical and Physiological Committee will consider in this connection the general question of cereal rust research to meet the requirements of Upper India.

ANNEXURE.

An application from the Government of the United Provinces to the Imperial Council of Agricultural Research for a grant of Rs. 34,334 spread over five years for research on breeding rust resistant varieties of wheat and barley for the plains.

INTRODUCTION.

The United Provinces grows about 22 per cent. of the total area under wheat and about 66 per cent. of the total area under barley in India. The two crops thus occupy about 11½ million acres in the United Provinces or about 29 per cent. of their total area in India.

The research work on wheat and barley in the United Provinces, has for many years, been entirely confined to the evolution of improved varieties by selection mainly from local sources. While with the financial assistance already extended by the Imperial Council of Agricultural Research and with the existing contributions of the local government, it will be possible, in due course of time, to evolve high yielding and better malting barleys for the various tracts in the United Provinces, one very important aspect of research for evolving barley varieties resistant to rust requires investigation and for which work necessary additional facilities should be extended.

Work on breeding of rust resistant varieties of wheat for hill cultivation is already in progress under the Imperial Economic Botanist and a considerable amount of expenditure is being incurred on this very important problem. The evolution of rust resistant varieties of wheat for the plain areas is equally important and should be undertaken. The Wheat Committee of the Imperial Council of Agricultural Research at their meeting held in May 1939, while emphasising the importance of the

work, also suggested that the provincial governments could take up breeding of rust resistant varieties for the plains.

A solution to the scourage of rust attack is further more important in a province like United Provinces where the barley and wheat crops are subjected to the devastating effects of all the three main forms of rust, namely, black, brown and yellow rusts. Although actual extent of damage to the final grain yield of the crop has not yet been precisely worked out, calculating at the very minimum damage of say worth Re. 1 per acre, a loss of 11½ million rupees will be observed in the United Provinces alone. It is thus obvious that the problem is of prime importance and one warranting concentrated attention.

Proposed scheme of work.

The entire work resolves itself into :—

(a) Collection and study of the indigenous and exotic material.

(b) Isolation by selection of pure types of economic value and resistant to rust.

(c) Hybridization of suitable parent types for evolving rust resistant varieties of economic value.

(d) Testing of the promising strains both at seedling and adult stage with physiologic races of all the three rusts separately as well as in mixture.

Available facilities and additional requirements.

Breeding work on wheat and barey is at present carried out by the Economic Botanist (Cotton and *rabi* Cereals) at Cawnpore and Raya and occupies about one quarter of the time of this officer and his staff amounting to about Rs. 9,000 per year as contributions from the local government. It is hoped, with local assistance to extend the wheat breeding work at Nagina, Belatal and Gorakhpur where only breeding work on barleys is now in progress.

The local government will, in addition to the present contributions, provide facilities in respect of land, buildings, implements, bullocks, cultivation charges, etc., etc., to meet the requirement of additional work concerning breeding of rust resistant varieties of wheat and barleys. It is hoped that necessary provision for additional staff for the breeding work along with other minor contingencies which is an integral part of the Scheme will be made by the Imperial Council of Agricultural Research. Work on testing the reaction of the varieties and their progenies can be carried out, by arrangement with Rai Bahadur Dr. K. C. Mehta, in his Laboratories where facilities exist as is apparent from last paragraph of the draft " Extension of investigations on cereals rusts during 1940—43 ". In view of the " Foot Note " under estimates of expenditure of the extension scheme under reference, provision for a Junior Assistant for testing work is also being made.

Work on breeding of rust resistant varieties will be centred at Raya (Muttra) where necessary facilities in the way of land, buildings, etc., exist and in view of its near location to Agra where tests on rusts resistance are intended to be conducted it will highly facilitate supervision and co-ordination of the two distinct aspects of the work.

Details of the proposed work are given and the annual provision requested from the Imperial Council of Agricultural Research is tabulated below :—

Particulars.	1st year.	2nd year.	3rd year.	4th year.	5th year.	Total.
	Rs.	Rs.	Rs.	Rs.	Rs.	Rs.
One Research Assistant (Rs. 175—12—295—15—475—25—500).	2,100	2,244	2,388	2,532	2,676	11,940
One Junior Assistant (Rs. 80—5—150).	960	1,020	1,080	1,140	1,200	5,400
One Fieldman (Rs. 30—½—35—1—40).	360	366	372	378	384	1,860
One Laboratory Attendant (Rs. 12—½—15).	144	150	156	162	168	780
One Peon (Rs. 10½—½/2—14) ..	126	126	132	132	138	654
Travelling allowance	300	300	300	300	300	1,500
Contingencies	1,000	1,000	1,000	1,000	1,000	5,000
Requirement for testing work.						
Junior Assistant (Rs. 80—5—150) starting pay Rs. 110.	1,320	1,380	1,440	1,500	1,560	7,200
Total	6,310	6,586	6,868	7,144	7,226	34,334

Technical programme of work.

(1) Collection and examination of suitable indigenous and exotic material of wheat and barley.

(2) Extraction of rust resistant varieties possessing high yield from the available material by methods of simple selection.

(3) Hybridization of suitable types for evolving rust resistant varieties of economic value.

(4) Work on testing the reaction of varieties of wheats and barleys both in the seedling and adult stage. A large number of promising varieties will be examined for resistance to the physiologic races of all the three rusts separately as well as in mixture.

(5) Testing of parents and their progenies as they become available through hybridization work.

APPENDIX XLVI.

Note on Subject No. 20 (d) :—Application from the Government of Sind for a grant of Rs. 75,400 spread over five years for a scheme of research on pulses.

The Government of Sind have applied for a grant of Rs. 75,400 spread over five years for a scheme of research on pulses (Annexure). The Provincial Government propose to meet all the non-recurring items of expenditure, *viz.*, land, laboratory equipment and labour, amounting to about Rs. 6,000. The scheme will be under the administrative control of the Officer-in-Charge of the Agricultural Research Station, Sakrand, while the technical details of work will be planned in consultation with the Botanist.

2. It may be recalled that at its meeting held in November 1938, the Advisory Board discussed the importance of pulses in relation to agricultural planning and the improvement of national nutrition. It was agreed that pulses were very important in relation to nutrition and that the Provincial Agricultural Departments should conduct preliminary experiments with pulses and select those best suited to them agriculturally. The Governing Body also agreed that such schemes should receive special consideration. This recommendation has already been brought to the notice of the Provincial Governments.

3. The Sind Government's proposals are for the consideration of the Advisory Board. They will first be considered by the Botany and Physiology Committee whose report will be submitted to the Board in due course.

ANNEXURE.

COPY OF LETTER No. 1937|95|23-E., DATED THE 4TH SEPTEMBER 1939, FROM THE GOVERNMENT OF SIND.

I am directed to transmit the advance copies of the marginally noted new research scheme for consideration at the twentieth meeting of the Advisory Board of the Imperial Council of Agricultural Research.

Scheme for research on pulses in Sind.

SCHEME FOR RESEARCH ON PULSES IN SIND.

Introduction.—With the advent of the perennial irrigation, due to the construction of the Lloyd Barrage Canals, the system of agriculture in Sind has undergone a radical change. The intensity of cropping is now very high and this has resulted in lowering of soil fertility. The recommended crop rotation for the lands commanded by the Barrage canals is cotton, wheat, wheat, wheat, fallow ; there is only a very small percentage of other crops. Both these crops are exhausting crops and it has become necessary to direct research to other crops which would maintain the soil fertility and at the same time be sufficiently remunerative.

The manuring of land to maintain the fertility of the soil does not usually find favour with majority of the zamindars and the haris. For

them, a system of rotation which includes the leguminous recuperative crops has to be devised, with the convincing evidence that the introduction of these crops would not affect adversely their cash return from the land. The pulse crops satisfy both these requirements.

Furthermore, the poor population mainly depends on pulses for the protein diet. The experts on human nutrition have already pointed to the very serious deficiency in the human diets in many parts of India. Sir John Russel has also recommended that Imperial Council of Agricultural Research should devote more attention to the improvement of crop production from the nutrition standpoint.

It is therefore essential that detailed rsearches for the improvement of various pulse crops be carried out so as to improve the yields and quality of this important group of crops, which at present occupies over 6 lakhs of acres in land.

II. *Present position.*—Very valuable work on pulses has been done at the Imperial Institute of Agricultural Research by Howards and later by Shaw—particularly on gram, matar, mung, urid, soya-beans, tur, and guar. This work is being continued at New Delhi. Of late similar work has been in progress in several Provinces.

In Sind, the oil-seed and special crop section of the Agricultural Department has been carrying on some preliminary work on the improvement of the important pulses. A few promising strains have been evolved which are still under trial. This section till recently was financed by grants from Sir Sassoon David Trust Fund, Bombay, and on the separation of Sind, this financial help has been withdrawn. The work is, however, being continued from grants of the Provincial Department of Agriculture.

In view of the importance of the improving of the various pulses commonly grown in Sind, it is desirable that detailed rsearches on the breeding, cultural and the nutritional side be taken up at an early date. The following scheme is therefore submitted to the Imperial Council of Agricultural Research, with the request that the same be financed for a period of 5 years in the first instance. The Advisory Board has already agreed that schemes of research on pulses should receive special consideration. The results of this work would be available to other Provinces as well. Pure types shall be maintained and shall be freely exchanged with the other research stations in India.

The programme of work and the financial statement is attached herewith.

Programme of work.—Research work on the following pulse crops will be undertaken :—

Kharif :

Important pulses.

Guar (cyamopsis psorabroides).

Mung (phaseolus mungo).

Urid (phasealus radiatus).

Cowpeas (Vigna sp.).

Subsidiary.

Tur (Arhar) (cajenus indicus).

Soyabean (glycnic hispida).

Val bean (Dolicos lab).

Rabi :

Important pulses.

White pea (Pisum sativum).

Gram (cicer arietinum).

Matar (Lathyrus sativus).

Subsidiary.

Lentil (Masur) (Frvum lens).

Detailed work will be undertaken on important pulses and in the case of the rest, the work shall be confined to the selection of suitable types, out of the promising varieties.

Programme of work :

1. Survey and collection of varieties which are being grown at present and their improvement by breeding out suitable types which would prove useful. Special attention will be paid to resistance to diseases and frost, high yielding capacity and good quality of grain and fodder.

2. Acclimatisation of promising strains from other provinces and from abroad which would suit Sind conditions.

3. Varietal tests.

4. Hybridization of types with desirable characters to evolve useful strains.

5. Study of fertilization and cross fertilization.

6. Genetical studies of a few important characters, *e.g.*, sterility, disease-resistance, and factors governing yield, etc.

7. Study of root system of important pulse crops.

8. Research on cultural treatments, *e.g.*, spacing between plants in the row and between rows seed rate, sowing dates, water requirements, etc., with a view to increase the output per acre.

9. Nutrition tests shall be undertaken at a later stage and this will be arranged in consultation with the Director, Nutrition Laboratory, Coonoor.

Details of Expenditure.—Details are given in the statement attached herewith.

Control.—Administrative control of the scheme will rest with the Officer in Charge, Agricultural Research Station, Sakrand, while the technical work of the scheme will be planned in consultation with the Botanist, Agricultural Research Station, Sakrand.

The Local Government will provide the free land equipped laboratories and Bullock power, etc.

Statement of expenditure for pulse scheme.

No. of posts.	Particulars.	Grade.	Amount required. First year.	Second year.	Third year.	Fourth year.	Fifth year.	Total of column No. 4.	Average expenditure per year.	Remarks.
1	2	3			4			5	6	7
I	*Capital Expenditure.*									
	Laboratory and field equipment.							5,000		
	Furniture, Laboratory field and other miscellaneous expenses.							1,000		
								6,000		
II	*Recurring Expenditure.* *Establishment.*									
	One Assistant Botanist—Class	II—170—10—250—E. B. 15—500.	3,000	3,180	3,360	3,540	3,720	16,800	..	Starting pay Rs. 250 p.m.
	One Graduate Assistant Grade	II—110—8—150	1,320	1,416	1,512	1,608	1,704	7,560		
	Two Graduate Assistants—Grade.	III—60—60—70—5—100.	1,440	1,440	1,680	1,800	1 920	8,280		
	Two non-Graduate Assistants	30—5/2—60—E.B. 4—100.	720	720	840	840	960	4,080		
	Two kamgars	25—1—35 ..	600	624	647	672	696	3,240		
	Two laboratory boys ..	15—fixed ..	360	360	360	360	360	1,800		
	One peon	16/—fixed ..	180	180	180	180	180	900		
	One clerk	25—5/2—55.	300	300	360	360	420	1,740		
			7,920	8,220	8,940	9,360	9,960	44,400	8,880	
III	Contingencies		5,000	5,000	5.000	5,000	5,000	25,000	5,000	
IV	Travelling Allowance ..	..	1,500	1,500	1,000	1,000	1,000	6,000	1,200	
		Total ..	14,420	14,720	14,940	15,360	15,960	75,400	15,080	

APPENDIX XLVII

Note on Subject No. 20 (e) :—Application from the Government of Sind for a grant of Rs. 21,700 spread over five years for a scheme of seed production of high yielding strains of berseem crop in Sind and the maintenance of nucleus of pedigree seed.

This scheme received from the Government of Sind for seed production of high-yielding strains of Berseem crop and maintenance of nucleus of pedigree seed is explained in the attached note. (Annexure). The Council is asked to meet the non-recurring expenditure of Rs. 500 and recurring expenditure of Rs. 21,200, spread over a period of five years. The contribution of the Provincial Government will be limited to provision of land, bullock, field implements, laboratory accommodation, threshing machine and other facilities for experimental work.

2. The scheme as drawn up gives an account of the work so far done by the Provincial Government but does not mention the work done in other parts of the country, particularly at the Imperial Agricultural Research Institute and in the North-West Frontier Province. It will also be recalled that in pursuance of a recommendation by Sir John Russell regarding the production and maintenance of pedigree seeds, the Council has already suggested to the Provinces and States the question of investigating the problems connected with the cultivation of berseem. The Imperial Agricultural Research Institute has been requested to investigate the technical difficulties in the setting of berseem seed. To ensure further co-ordination, the Provinces and States have been asked to send to the Imperial Entomologist specimens of any pest or insect found visiting berseem.

3. The scheme will first be considered by the Botanical and Physiological sub-committee of the Advisory Board who will submit its report to the Board in due course.

ANNEXURE.

SCHEME OF SEED PRODUCTION OF HIGH YIELDING STRAINS OF BERSEEM CROP IN SIND AND MAINTENANCE OF NUCLEUS OF PEDIGREE SEED.

Introduction.—After the opening of the Barrage Canals, the cropped area in Sind has considerably increased. There has been a corresponding increase in the number of draught cattle. The cultivators are growing cash crops like cotton at the expense of fodder crops. Consequently there is scarcity of fodder and the fodder problem has therefore assumed great importance. Jowar is the chief fodder crop in kharif season. But there is a belief that this crop exhausts the soil. Hence need of a suitable crop which would maintain the soil fertility is greatly felt. This need could be filled by the introduction of berseem into general cultivation.

Berseem (Egyptian clover) is an excellent and high yielding 'rabi' leguminous fodder crop, which is much relished by all kinds of stock. It grows very well in Sind and has also been found useful for cultivation in crop rotations and in the process of reclaiming kalar lands.

Inspite of the fact that berseem is an excellent fodder crop, its extension is limited on account of high cost of seed imported from Egypt. Some

seed is imported from Peshawar and sells at a cheaper price than the seed imported from Egypt. But the seed is not satisfactory and is mixed with seeds of chicory and other weeds. At present owing to very little home grown seed being produced in Sind, it is being imported either from Egypt at Rs. 40 per maund or from Peshawar at Rs. 25 per maund. The question of seed production therefore is very important, if berseem is to be introduced into general cultivation.

Work already done by the Agricultural Department in Sind.—At the Agricultural Research Station, Sakrand, Berseem has been successfully grown for fodder as well as seed purposes. The experimental work has been directed towards investigation of (*a*) technique of cultivation, (*b*) the optimum sowing time, (*c*) determination of optimum seed rate for fodder and seed production, (*d*) irrigational requirements, (*e*) effects of number and time of fodder cuttings on seed production.

The data obtained indicate that the land to be put under berseem should be irrigated and seed, after soaking it for about 8 hours, should be broadcasted in the standing water. The crop can be sown from middle of October to beginning of December. The seed rate for good soils, is 20 lbs. and for the kalar and stiff land, it varies from 25 to 40 lbs. First light irrigation is given a week after sowing and the subsequent irrigations are given at an interval of a fortnight. The total delta of water applied to the crop is about 30 acre inches, which is twice the quantity required for other rabi crops, *e.g.*, wheat. About 4 to 6 cuttings are obtained yielding 400—500 maunds of green fodder. For seeding purpose, only two cuttings are taken up to beginning of February. There are several factors which control setting of seed in this crop, especially irrigation and time when cutting is taken. The work has been of exploratory nature and has been concentrated on one variety only. It is intended to extend this work on the following lines.

Further programme of work.—The following detailed scientific work is required to be done :—

1. Isolation of pure lines of all varieties of berseem and study of their botanical and agricultural characters.
2. Breeding of suitable high yielding strain for cultivation in Sind by selection.
3. To investigate the cause of bad setting of seed and to find out the ways and means to produce normal yield of good pure seed.
4. To maintain a nucleus of pedigree seeds.
5. Multiplication of pure home grown seed.
6. Study of pollination, fertilization and sterility., etc.
7. Trial of different varieties of berseem, imported from different places.

Importance of the Scheme.—Berseem is a very important crop of the 'rabi' season both for fodder and for the maintenance of the soil fertility and for reclamation of kalar land. There is no such other nutritious fodder available in 'rabi' season for the upkeep of cattle. It is very much liked by the cultivators but the expansion of this crop is receiving a great

check on account of prohibitive cost of seed and bad setting of seed. To encourage the cultivation of this crop, it is necessary to produce sufficient quantity of pure home-grown seed for distribution to the cultivators at cheaper cost and to breed high yielding strains showing good setting of seed.

Location of the Scheme.—All the research work will be done at the Agricultural Research Station, Sakrand, under the supervision of the Botanist, Sakrand. The Department of Agriculture, Sind, will provide land, bullock, field implements, laboratory accommodation, threshing machine and other facilities for experimental work. An area of about 20 acres will be reserved.

Expenditure.—A statement showing the proposed expenditure from the Imperial Council of Agricultural Research for this Scheme is attached hereto. The total expenditure for five years will amount to Rs. 21,700 with an average cost of Rs. 4,340 per year.

Proposed expenditure from the Imperial Council of Agricultural Research.

Heads.	First year.	Second year.	Third year.	Fourth year.	Fifth year.	Total.	Remarks.
	Rs.	Rs.	Rs.	Rs.	Rs.	Rs.	Rs.
Recurring Expenditure.							
I. *Staff*—							
One Research Assistant Rs. 110—8—150	1,320	1,416	1,512	1,608	1,704	7,560	
Field Assistant (one) 30—5/2—60 ..	360	360	420	420	480	2,040	
One Senior Counter 30—1—35 ..	360	372	384	396	408	1,920	
One Junior Counter 25—1—35 ..	300	312	324	336	348	1,620	
Total staff ..	2,340	2,460	2,640	2,760	2,940	13,140	
II. Travelling Allowances	100	100	100	100	100	500	
III. Contingencies (including labour) ..	1,500	1,500	1,500	1,500	1,500	7,500	
Total recurring ..	3,940	4,060	4,240	4,360	4,540	21,140	
Non-recurring expenditure for furniture and apparatus ..	500	..	..	..	..	500	
Grand total expenditure	4,440	4,060	4,240	4,360	4,540	21,640	Rounded to Rs. 21,700

Average cost per year Rs. 4,340.

APPENDIX XLVIII

Note on Subject No. 20 (f) :—Scheme for investigation into the prospects of increasing cinchona cultivation in India.

At its meeting held in May 1939, the Advisory Board considered the report on the prospects of cinchona cultivation in India by Mr. A. Wilson (*vide* pages 19—24 and 80—82 of the Report) and recommended that to begin with the following items of work be undertaken :—

(i) A state nursery for the supply of vigorous disease-free seedlings of the best quality ;

(ii) A research station ; and

(iii) Trial plots of an acre each in selected areas.

The Board desired that a suitable programme of work on these lines for a period of five years might be drawn up by one of the workers already dealing with cinchona cultivation in India who might, if necessary, consult Mr. Wilson and that a proper scheme be put up before the Board at its next meeting. The Governing Body approved of this recommendation with the remark that two schemes should be drawn up in the first instance, one for the North India and another for the South.

2. On the suggestion of Mr. Wilson, Mr. S. C. Sen, Superintendent, Cinchona Cultivation, Bengal, has kindly drawn up the attached scheme (Annexure) for the consideration of the Board. Paragraph 18 of the scheme contains a brief statement of the problems which require to be tackled according to Mr. Sen and paragraphs 21—29 give the technical programme of work. The scheme is estimated to cost Rs. 5,78,742 (Rs. 1,20,692 non-recurring and Rs. 4,58,050 recurring) spread over a period of five years, but Mr. Sen has indicated the periods for which work under each item has to be carried out, varying from 7 to 10 years and more. Of this amount the scheme for Northern India is estimated to cost Rs. 3,69,076 (Rs. 85,331 non-recurring and Rs. 2,83,745 recurring) and that in South India Rs. 1,92,166 (Rs. 35,361 non-recurring and Rs. 1,56,805 recurring). A summary of the estimates will be found in paragraph 41 of the scheme. The details of these estimates require scrutiny ; the scales of pay of the staff proposed will have to be regulated in accordance with the revised scales of pay enforced for corresponding staff in the province where the research work is actually carried out.

The scheme will first be considered by the *ad hoc* Botanical and Physiological Committee and its report will be submitted to the Board in due course.

ANNEXURE.

A SCHEME OF RESEARCH ON CINCHONA.

The early success of the Indian venture in cinchona has proved ultimately to be a misfortune in the sense that attention was soon diverted from the more technical aspects of cultivation and utilisation to the problems of large scale production. On the cultivation side the work of McIvor in Madras and of Anderson and King in Bengal had in less than a decade evolved fairly satisfactory methods in technique, but no intensive

efforts appear to have been made to arrive at the best possible methods. A perusal of old records shows that much of the early conclusions were based on a general consideration of ecological and horticultural principles and the absence of any extensive system of comparative trials often led to controversies that savour of the polemics of the middle ages. It must be admitted that, the initial difficulties once overcome, we find mention of the starting of special experiments but few details are unfortunately recorded of the progress of these experiments nor are the final conclusions definitely expressed.

2. On the chemical side Broughton in Ootacamund and Wood in Mungpoo had, within the period mentioned above, come to important conclusions on the relations between the cinchona plant and its alkaloid contents, conclusions which appear to be based on definite quantitative work the details of which are often reported. It is a pity that the posts of Quinologists were not continued and the experimental method definitely accepted as a basis of development.

3. The extraction of the alkaloids of cinchona, initiated by these quinologists, was subsequently developed on the large scale by workers who, in Bengal at least, were primarily horticulturists. It is a great credit to these pioneers that the methods of extraction remain to this day practically unaltered except in the details of process, the utilisation of mechanical appliances and in the finish of products.

4. The methods of cultivation have no doubt improved since the early days ; this is apparent from a comparison of results. But the improvement has come gradually through a process of evolution of the routine practice rather than through an intensive and consciously directed effort. Cinchona cultivation in India, it may be said, has developed as an art, rather than as a science, with its attendant disadvantage of dependence on the personal factor.

5. While the major plant industries of the world, including cinchona in Java, have utilised the modern advances in the fundamental sciences, the cinchona industry in India has failed to move with the times. This is no doubt due, as Mr. Wilson suggests, to concentration on the work in hand, namely, the immediate routine of production and distribution, by an inadequate staff of workers. This was perhaps of no great consequence while the demand on the local industry was small but, now that the need for more adequate and cheaper supplies of the cinchona alkaloids is being keenly felt, an immediate change of policy is called for.

6. The desirability of India becoming self-sufficient in respect of quinine has been stressed often enough. The immediate lessons of the present war, prices rising and supplies getting scarce, changes this desirability into a necessity. The attainment of self-sufficiency depends on two factors—

(1) the extension of cinchona cultivation into fresh areas, suitably selected, and

(2) the improvement of technique leading to an increased output per unit of land.

The burden of actual extension will presumably rest upon the Provincial Governments, States and private concerns in possession of suitable land.

But any positive results obtained in the improvement of technique would be an effective inducement to fresh ventures. An increase in productions would help in the conservation of our land resources which must, after all, be limited in respect of cinchona. And a reduction of costs, if possible, should help in increasing the consumption of quinine within the country.

7. In connection with these matters the need for systematic research was very strongly urged by Mr. Wilson in his Report on the Prospects of Cinchona Cultivation in India, and the Governing Body of the Imperial Council of Agricultural Research have decided on a scheme with two centres, one for the north of India and the other for the south, each to include (1) a state nursery, (2) a research station, and (3) one acre experimental plots in selected areas. My task is to suggest a complete scheme on the above lines.

8. I have already submitted to the Council the general outline of such a scheme. Full extracts from my letter to Dr. Burns are given below* to explain the basic ideas on which the detailed estimates have been built up.

9. Though there should be separate research stations for the north and the south, I do not think there should be two separate and independent projects. The work of the two stations should be complementary to each other and based on a single comprehensive scheme.

10. The idea of State nurseries, of course, requires two separate centres since the young cinchona will not stand much travelling or handling. But the South will have to look to the North for help in the early years since admittedly, the technique of large scale nursery work has been satisfactorily developed only in Bengal. The supply of planting material to new undertakings would be of help only in the earlier stages of development. The ultimate aim should be for each plantation or estate to have its own nurseries, for the best results can only be derived from material grown on the spot. The State nurseries should therefore try and establish the existing nursery methods on a scientific basis so that results may be reproducible independently of personal factors or of local conditions. Attempts should also be made to improve on the existing methods with a view to improving the quality of seedlings and reduce nursery costs. This will require close co-operation between the two proposed research stations, including exchange of visits by technical workers.

11. With regard to the improvement of yields, the first thing that comes to one's mind is the arrangement of field trials. Mr. Wilson's proposed one acre plots were suggested with a very definite and limited object in view, namely, the testing out, by actual planting, of areas in different parts of the country which, from a general consideration, may be regarded as suitable for cinchona. But study of the various aspects of cultivation would be a much wider problem and would require a good deal more land. The density of population on a cinchona block is very small compared to agricultural crops and there is generally much greater individual variation. The study of each factor of growth, I think, will require at least an acre and, further, each experiment would take up several years as cinchona is a plant of comparatively long economic life.

*Paragraphs 9 to 19.

Any comprehensive scheme of field trials therefore could not be undertaken on anything less than 30 acres of land though all of it would not necessarily be developed simultaneously.

12. Many field trials could, as suggested by Dr. Burns in his note of 13th May 1939, be conveniently made in the existing Government plantations where a great variety of conditions and age groups are already available. By arrangement with the local Governments experimental plots could be selected and fenced off in existing and future blocks and kept under different treatments in charge of the research stations. For those trials which may require conditions not normally found in connection with the existing routines of cultivation and for those that may require specially rigid control I would suggest that a reasonably large area be obtained on loan from one of the Provincial Governments and an experimental plantation initiated under the direct control of the corresponding research station. There appears to be no need for duplication here and one such area should serve for the combined scheme if decided upon.

13. A good deal of work will be necessary in connection with soil studies. The interpretation of laboratory work would be more accurate and more fruitful if the workers have first hand knowledge of the soil profiles and the topographical and climatic factors of the soils they deal with. Apart from the mechanical and chemical analysis of existing cinchona soils, study of their dynamic relations to environmental conditions and the processes of cultivation would also be necessary. Problems in the prevention of erosion, the conservation of organic matter, and regeneration of the land after a cycle of cinchona—a very important matter under the rigorous conditions of the available cinchona areas in India—will require the co-operation of the soil chemist with the practical planter. I would suggest that each of the research stations should have a soil laboratory of its own.

14. The analysis of the cinchona plant and particularly of its alkaloid contents at various stages of growth and under different conditions in relation to environment as well as inheritance will be another important part of our work. The estimate of alkaloids will also be necessary at every stage where the question of yield is involved. This work can easily be concentrated at one of the proposed research stations and a laboratory of organic analysis combined with the soil laboratory there.

15. In the whole history of cinchona in India no work has yet been done on the physiology of the plant. I think it is essential that a start should now be made and a complete study of its life history undertaken. The results are bound to place our methods of cultivation on a more rational basis and enable us to face new conditions with some confidence without being completely dependent on expensive methods of trial and error. In the study of specific problems also a detailed knowledge of the individual plant will enable field experiments to be designed to the best advantage and in many cases laboratory work would help to elucidate results obtained in the field. I would therefore suggest the establishment of a physiological laboratory at one of the research stations. This laboratory will work in close co-operation with the organic and soil laboratories already proposed.

16. Mr. Wilson has stressed sufficiently on the need for increasing the quinine content of our cinchona. Improvement in this direction will require the working out of effective methods of selection from existing material. I doubt if we could obtain much reliable material from Java. In the existing plantations in Madras and Bengal a large number of high quality trees have already been selected after analysis of their bark. These require to be multiplied by vegetative methods of propagation in order that proper seed gardens may be established. It is also necessary to see if we cannot adopt vegetative method of propagation on a large scale for the field itself. Further there is the possibility of developing, by systematic cross breeding from our existing species and hybrids, new strains of cinchona which will be not only sufficiently rich in quinine but also hardier than our existing strains. Much of this will require the help of the expert horticulturist but the work should be in charge of a geneticist with experience in the practical methods of plant breeding as well as in cytological technique. He will be attached to one of the research stations but will have access to material from all the existing plantations.

17. Lastly there is the question of statistical work in connection with the design of field experiments and the interpretation of results. Here, I think, we may safely rely on the help of the Statistical laboratory in Calcutta. For ordinary routine work the laboratory staff at both the stations may be expected to pick up some knowledge of statistics.

18. The suggestions outlined above may be summarised as follows :—

(1) A comprehensive programme of research involving work of a fundamental nature as well as investigation of the immediate problems of cultivation.

(2) Two research stations, one in the North and one in the South, both to work according to a single plan instead of working independently of each other.

(3) State nurseries attached to each station with the immediate object of supplying planting material to new undertakings but with the ultimate object of placing the present empirical methods of nursery work on a scientific basis.

(4) One acre test plots in selected areas under the supervision of each station for determining the suitability of land for growing cinchona.

(5) Experimental work to be concentrated on an area of much greater extent at one of the research stations and supplemented by work on the existing Government plantations both in the North and the South.

(6) Soil studies in relation to static factors and dynamic changes and in connection with problems of maintenance and regeneration of fertility with specific reference to the crop to be undertaken at both the stations.

(7) Studies in the genetics, physiology and chemistry of the plant to be undertaken at one of the research stations.

19. The co-operation of the Governments of Madras and Bengal are essential to the success of any scheme of research in India on cinchona, as all the available material and most of the experience are located in their

existing plantations. I have little doubt that the Government of Bengal would gladly help and place all necessary facilities at the disposal of the Council. There is no reason to think that the Government of Madras would be otherwise inclined.

20. A cut-and-dried programme of work is difficult to furnish at this stage and any programme formulated now would necessarily be liable to modifications in the light of experimental results obtained from time to time. But an indication, however, rough, of the subjects requiring study should be useful in examining the scheme as a whole. Such an indication is given in the following paragraphs. Some duplication and overlapping will probably be found in the analysis of subjects but a precise and exclusive classification under different headings is impossible from the nature of the work itself. Omissions also will no doubt be discovered, but these may be repaired in the course of discussions.

21. *Studies in Genetics.*—

(1) Herbalium studies of species described in old literature.

(2) Examination of species, hybrids and special strains in the existing Indian plantations. Specimens of principal strains in Java (if possible).

(3) Correlation of morphological characters with quinine content, vigour of growth and tolerance factors if possible. Selection of individuals for propagation.

(4) Cytological examination of existing species and strains. Possibility of artificial inducement of polyploidy.

(5) Technique of controlled fertilisation training of malis.

(6) Transmission of characters through

(a) selective propagation,

(b) hybridisation,

(c) vegetative propagation, possibility of mutations.

22. *Studies in Physiology and Chemistry.*—

(1) Water relations, Sap movements, Osmotic pressures for different species and different ages.

(2) Nutrition, physiological balance of nutrient supplies, pH relations, role of trace elements.

(3) Limits of tolerance to climatic factors, possibility of acclimatisation to different conditions without change of inheritance factors, time limits of tolerance to abnormal conditions.

(4) Total growth in relation to nutritive and physical factors. Form of growth, influence of light and air, effects of pruning. Factors of bark formation.

(5) Metabolic processes.—Formation of alkaloids and their differentiation. Factors affecting ultimate quinine contents. Degradation of alkaloids.

(6) Microchemical tests for cinchona alkaloids. Quantitative micro-analysis of bark.

(7) Reproduction—

(a) Sexual—Maturity, flowering, seed formation, relation between maturity, longetivity and ultimate growth. Viability of seed, conditions of storage, conditions of germination.

(b) Vegetative—Root formation in cuttings and layers, role of temperature, moisture and oxygen supply, influence of phytohormones. Factors affecting union in grafting and budding. Histological studies of root formation and cellular union.

23. *Soil Studies.*—

(1) Correlation of soil characteristics with factors of yield-size of tree, thickness of bark and content of quinine and other alkaloids from survey of existing plantations. Soil examination of prospective areas for advisory purposes.

(2) Manurial trials—Chemical manures. Field trials of laboratory results on nutrition. Rectification of specific deficiencies of '*poor*' *soils. Limit of improvement of normally* '*good*' soils. Suitable seasons of application. Influence of trace elements.

(3) Manurial trials—organic manures. Leguminous and non-leguminous crops of differeut species grown over varying periods. Effect on total organic matter on nitrogen. Value of natural weeds growing on existing areas under cinchona and in prospective areas. Possibility of external supplies of organic manure—farm yard manure in small doses, composts.

(4) Variation of soil factors—

(a) Seasonal changes—Temperature, moisture, pH. Nitrogen balance.

(b) Progressive changes—Soil texture, total organic matter, humic contents, moisture relations, nitrogen, minerals, pH. Loss of fertility through crop production, through leaching, through loss of surface soil. Cinchona sickness.

(5) Erosion and conservation of soil-correlation of erosion with rainfall and drainage conditions. Mechanical and vegetative methods of conservation.

(6) Fallowing and soil renovation—by brush and jungle, reforestation, leguminous crops, mechanical and artificial methods.

24. *Statistical Work.*—

(1) Study of existing cinchona populations in relatively large samples with a view to obtaining normal frequency curves, if possible, of

(a) density of population,

(b) size of individuals,

(c) bark per tree,

(d) quinine content of bark.

(2) Statistical analysis of above data with a view to ascertaining adequate size of "small samples" for the determination of

averages, size of sample and standard deviation, probable error of mean, etc.

(3) Preparation of growth curves for different species of cinchona with reference to

size of tree,

bark per tree,

quinine content of bark,

also curves of enumeration/age and progressive harvests/age per acre under normal cultivation practice.

(4) Devising methods of estimating standard bark and quinine also future yields.

(5) Design of field trials for determining influence of various factors on yield.

25. *Evaluation of Prospective Locations.*—

(1) Collection and analysis of local climatic and soil factors. Seasonal variations of air and soil temperatures, distribution of rainfall, drainage conditions, variations of soil moisture, physical and chemical soil survey, erosion factors, ecological associations, drafting of a standard form for collection of data for advisory purposes.

(2) Approximate reproduction of climatic and soil factors in pot cultures.

(3) One acre trial plots. Cultivation of different species under different spacings, with and without shade measurement of growth and determination of quinine contents with a view to estimating probable yields. Study of probable costs.

26. *Propagation from Seed-Nursery Work.*—

(1) Selection of seed trees (see 3 under genetic studies). Method of sampling bark for quinine content. Collection of seed, testing and selection.

(2) Co-ordination of nursery practice with laboratory studies of optimum conditions of germination. Practical methods of controlling nursery conditions. Time of germination under varying conditions.

(3) Pretreatment of seed before germination, influence of phytohormones. Vernalisation—possible use in breeding technique.

(4) Nature of young seedlings, food requirements, temperature and moisture relations, medium of nurture, rate of growth and control of growth. Possibility of selection at the seedling stage for vigour and quinine content.

(5) Nursery sanitation.—Sterilisation and partial sterilisation of soil. Weeds, insects, fungi and their control. Drainage, aeration.

(6) Acclimatisation of seedlings to field conditions. Gradual hardening to the weather Root and shoot pruning.

(7) Methods of packing for transport.

(8) Training of nursery hands.

(9) Costs.

27. *Vegetative Propagation.*—

(1) Grafting—Relative efficiencies of different types of grafting, choice of species for rootstock, ages of stock and scion, physical conditions favourable to union, choice of season. Relative growth values of grafts and seedlings with reference to soil conditions.

(2) Cuttings—Type of cuttings, age of material, relative ease of root formation with different species, influence of alkaloidal content on difficulty of rooting. Influence of phytohormones on promotion of root growth. Choice of rooting media, temperature and moisture conditions, design of cheap propagating houses.

(3) Budding and Layering.

(4) Time factors and costs.

28. *Cultivation.*—

(1) Preparation of the land—Felling and clearing forest, secondary forest or jungle, standards of cost, possibility of labour-saving appliances.

Value of initial trenching of land in relation to root development, aeration, conservation of organic matter, etc. Soil conservation measures, terracing, capital cost of terracing, increase of cultivation costs through terracing, individual terraces. Stone walls, timber (log) walls, herbaceous hedges, contour drains, silt traps. Cover crops. Pitting or trenching for planting. Possibilities of agricultural explosives. Costs.

(2) Planting—Choice of seasons and days, soil moisture, atmospheric humidity. Age and size of seedlings, shock of transplanting, application of manures to help recovery from shock, limits of age of seedlings for field planting. Spacing of plants, comparison of growth and root competition at different spacings. Shade, wind protection, etc.

(3) Cultivation—Drainage, weeding, sickling, forking, aeration by trenching, mulch pits covering of bark to promote quinine formation.

29. *Harvesting.*—

(1) Removal of dead and dying plants, thinning and pruning.

(2) Coppicing—Best age of coppicing, survival and mortality after coppicing, pruning of coppiced shoots, development of alkaloids. Replanting of vacancies amongst coppices, best time of replacement. Root competition of coppices and transplants. Root degradation of coppices.

(3) Final uprootal of blocks—best age.

(4) Relative yields from the coppice system of harvesting and straight uprootals.

(5) Methods of drying and storage, design of cheap drying arrangements.

(6) Retrial of old methods of harvesting, mossing or stripping, scraping.

(7) Utilisation of twigs and leaves, costs.

(8) Costs.

30. *Extraction of Alkaloids.*—In paragraph 56 of his report Mr. Wilson suggests that research on the methods of manufacture should be undertaken by the quinine factories themselves. I fully agree with this view and would merely add that the methods employed in the Indian factories are sufficiently up to date to admit of very economic extraction provided the scale of operations is sufficiently large.

31. In the following paragraphs detailed estimates are given against the different units of organisation proposed for the scheme. A summary will be found in paragraph 41.

If Col. Russel's estimate of 600,000 lbs. be taken as the quantity which should be the aim of India to produce, the money value involved is, on the basis of prewar prices, rupees one crore and twenty lakhs a year. If on the other hand we are content with the present standard of consumption within the country, the yearly expenditure is rupees forty lakhs of which rupees twenty-eight lakhs (equivalent to 140,000 lbs. quinine sulphate) is spent on the imported drug. The stakes are, in any case, well worth a fair run.

32. *Nurseries.*—

	Non-recurring.		Recurring, yearly.	
	Bengal	Madras	Bengal.	Mgdras.
	Rs.	Rs.	Rs.	Rs.
Clearing land, preparation of site, water connections, fencing etc.	1,200	1,200	..	..
Raising of plants for 200 acres extensions per annum for the first 5 year period @ Rs. 15 0/00 plants—Rs. 41 per acre of 2,725 plants (inclusive of malis)	..	..	4,100	4,100
Allowance of 25% extra plants for damage in transit	..	..	1,025	1,025
Cost of packing plants, for transport @ Rs. 2 0/00 plants = Rs. 6-8-0 per acre of extension	..	..	680	680
Allowance of 30% extra for vacancies in the 2nd and 3rd years, raising and packing ..	..	..	1,434	1,434
Experimental work on nursery technique @ Rs. 25 0/00 plants 10,000 plants at each station	..	..	250	250
Tools and implements	300	300	150	150
	1,500	1,500	7,639	7,639

These nurseries are intended to provide for the experimental cultivation of cinchona by various authorities in India. Any thing beyond this would, from the practical point of view, be outside the scope of state nurseries.

The cost of these nurseries should be recoverable from those intending to utilise them if proper arrangements are made in advance for a balance

of demand and supply. If the demand for seedlings is less than anticipated above the expenditure will be correspondingly reduced.

33. *One Acre Test Plots.—In 6 selected areas under the supervision of each research station.*

Expenditure per plot per year.

		Rs.
(*a*) Non-recurring—		
Felling and clearing 3 acres, at Rs. 40 per acre allowing a clear space of 75′ on each side of the cinchona plot	=	120
Road and drains at Rs. 20 per acre	=	20
Lining, pitting, planting, etc., at Rs. 50+15 per acre allowing 30 per cent. extra for replanting of vacancies	=	65
Plants at Rs. 15 0/00, 4037 plants per acre allowing 25 per cent. extra for damage in transit and 25 per cent extra for vacancies in the 2nd and 3rd years	=	60·5
Cost of packing plants at Rt. 2/ 0/00	=	8
Cost of transit of plants at Rs. 5/ 0/00	=	20
Tools and Implements per plot	=	75
Fencing, abbout 1,000′, against wild animals and vermin	=	150
		518·5
(*b*) Recurring—		
Renewal of tools and implements	=	25
Cultivation, first 2 years at Rs. 75 per plot, next 3 years at Rs. 25 per plot, yearly average over 5 years	=	45
Harvests, 200 lbs., dry bark in the last 3 years at ½ anna per lb. = Rs. 6-4 = average Rs. 1-4 per year over the 5 year period ..	=	1—4
Wages of mali—*Rs. 30 per month*	=	360

Total expenditure, for 6 plots, per year—

	Non-recurring.		Recurring.	
	Bengal.	Madras.	Bengal.	Madras.
	Rs	Rs.	Rs.	Rs.
Establishing 6 plots @ Rs. 518·5 each ..	**3,111**	**3,111**	..	..
Tools and implements	**450**	**450**	..	..
Renewal of tools and implements	..	..	**150**	**150**
Cultivation	..	..	**270**	**270**
Harvesting	..	..	**7·5**	**7·5**
Cottage for malis @ Rs. 150 each	**900**	**900**	..	..
Wages of 6 malis	..	..	**2,160**	**2,160**
Tour of horticultural officers, twice a year ..	..	..	**1,500**	**1,500**
	4,461	**4,461**	**4,087·5**	**4,087·5**

The estimates are based on the assumption of 6 test plots in widely separated regional areas. If more than one test plot is maintained in each area the overhead expenses will be somewhat less and therefore the cost per plot correspondingly reduced.

34. *Experimental Plantation—One, in Bengal.*—Ultimate size—50 acres, of which 25 acres are likely to be brought under cultivation in the first five year period.

	Non-recurring. Bengal. Rs.	Recurring. Bengal. Rs.
Felling and clearing 30 acres at Rs. 40/acre	1,200	..
Roads and drains at Rs. 20/acre	500	..
Lining pitting, filling planting, etc., at Rs. 50/acre	1,250	..
Cost of seedlings 2,725 × 25 at Rs. 15 0/00	1,022	..
Replacement of vacancies, 25 per cent. in two years, includes both items above	568	..
Normal cultivation at Rs. 75/acre first two years and Rs. 25/acre next three years average Rs. 45 per year during the first five years	..	1,125
Cost of experimental treatment at average of Rs. 30 per acre per year	..	1,000
	4,540	1,875

Tools and implements unnecessary, as labour will be requisitioned from the Government plantations.

35. *Experimental Work in the existing Government Plantations.*—20 plots of one acre each in the Bengal and Madras plantations.

	Nonrecurring.		Recurring.	
	Bengal. Rs.	Madras. Rs.	Bengal. Rs.	Madras. Rs.
Fencing off @ Rs. 30 per plot	600	600	..	..
Repairs to fence	..	..	100	100
Experimental treatment @ average cost of Rs. 30 per acre per annum	..	..	600	600
Travelling of horticultural officers	..	..	500	500
	600	600	1,200	1,200

36. *Propagation and Potculture Houses.*—One only—in Bengal.

		Non-recurring Rs.	Recurring. Rs.
Glass house, 40′ × 25′		4,500	..
Heating arrangement—			
Boiler	400	..	..
Pipe fittings	300	..	..
Fitting charges	80	780	..
Electric fittings and light		250	..
Other Equipment		700	..
Renewals and repairs		..	250
Fuel, 2,000 mds. firewood at Rs. 13/% mds.		..	260
6 malis at Rs. 30 /month		..	2,160
Manual labour, average Rs. 30 per month		..	360
Total ..		6,230	3,030

37. *Laboratory and Office.*—Soil laboratory only in Madras. Soil, Plant physiology and Organic chemistry laboratories in Bengal.

	Non-recurring.		Recurring.	
	Bengal.	Madras.	Bengal.	Madras.
	Rs.	Rs.	Rs.	Rs.
Construction of laboratory building	1,5000	6,000	..	..
Fittings	2,000	800	..	..
Maintenance and repair @ 3%	..	..	495	198
Instruments, apparatus and other equipment ..	25,000	9,000	..	..
Renewals and replacements	..	..	4,000	1,500
Reagents, solvents, etc.	..	..	2,000	800
Laboratory hands—				
Genetics—1 × 20/months	..	..	240	..
Plant Physiology 2 × 20	..	..	480	..
Organic chemistry 3 × 20	..	..	720	..
Soil chemistry 4 × 20	..	..	960	960
Cleaners @ Rs. 10	..	..	240	120
Sweepers @ Rs. 15	..	..	180	180
Chaprasis—				
Laboratory 1 × 14	..	..	168	..,
Office 1 × 14	..	..	168	168
Stationery and office contingencies	..	..	400	200
Touring of technical officers	..	..	500	500
	42,000	15,800	10,551	4,626

38. *Technical Staff.*—

	Nonrecurring.		Recurring.	
	Bengal.	*Madras.	Bengal.	Madras.
	Rs.	Rs.	Rs.	Rs.
Horticultural supervisor and liaison of officer, part time, consolidated allowance of Rs. 200 per month	..	..	2,400	..
Station Director and liaison officer, part time, consolidated allowance of Rs. 200 per month ..	..	..	..	2,400
Horticulturist, on Rs. 250—50—450, average for the first five years	290	..	3,480	3,480
Construction of quarters	4,000	4,000	..	..
Maintenance and repairs @ 3%	..	..	120	120
Geneticist, on Rs. 300—20—500, average for the first five years	340	..	4,080	..
Construction of quarters	4,000	..	..	..
Maintenance and repairs	..	..	120	..
Field Assistant, on 100—10—200, average for the first five years	120	..	1,440	1,440
Construction of quarters	2,000	2,000	..	..
Maintenance and repairs	..	..	60	60
carried over ..	10,000	6,000	11,700	7,500

	Nonrecurring.		Recurring.	
	Bengal.	Madras.	Bengal.	Madras.
	Rs.	Rs.	Rs.	Rs.
Brought forward ..	10,000	6,000	11,700	7,500
Plant Physiologist on Rs. 300—20—500, average for the first 5 years	340	..	4,080	..
Construction of quarters	4,000	..	..	..
Maintenance and repairs	..	..	120	120
Soil chemist, on Rs. 250—20—450	..	..	3,480	3,480
Construction of quarters	4,000	4,000	..	..
Maintenance and repairs	..	..	120	120
Assistant Soil chemist on Rs. 100—10—200 ..	..	..	1,440	1,440
Construction of quarters	2,000	2,000	..	..
Maintenance and repairs	..	..	60	60
Chief chemist, on Rs. 350—20—550, average during the first five years	390	..	4,680	..
Construction of quarters	4,000	..	..	..
Maintenance and repairs	..	..	120	..
Contributions to Pensonary charges (of deputed officers) or to Provident funds @ 5% on salary	..	..	1,134	492
	24,000	12,000	26,934	13,092

39. *Establishment.*—

	Non-recurring.		Recurring.	
	Bengal.	Madras.	Bengal.	Madras.
	Rs	Rs.	Rs.	Rs.
Clerk and Storekeeper @ 40—5/2—50, average during first five years	44	..	528	..
Hill allowance @ Rs. 25% average	11	..	132	..
Typist @ 40—5/2—50	..	..	528	..
Hill allowance	..	..	132	..
Clerk and Typist @ Rs. 40—5/2—50	..	..	..	528
Hill allowance	..	..	..	132
Quarters, @ Rs. 1,000 each	2,000	1,000	..	..
Maintenance and repairs	..	..	60	30
Contribution to pensionary charges or Provident funds	..	..	53	27
	2,000	1,000	1,433	717

40. *Overhead.*—

	Yearly.
	Rs.
Statistical advice	500
General travelling expenses ..	3,000
Direction charges ..	Will depend on the final organisation of the scheme decided upon.

41. *Summary of Estimates.*—

Unit.	Probable period of work years.	Expenditure. Non-recurring. Bengal.	Non-recurring. Madras.	Recurring yearly. Bengal.	Recurring yearly. Madras.
		Rs.	Rs.	Rs.	Rs.
State nurseries	7	1,500	1,500	7,639	7,639
One acre test plots	8	4,461	4,461	4,087	4,087
Experimental plantation	10	4,540	..	1,875	..
Experimental plots in existing Government plantations	10	600	600	1,200	1,200
Propagation and Pot Culture ..	10*	6,230	..	3,030	..
Laboratory and office	10*	42,000	15,800	10,551	4,626
Technical staff	10*	24,000	12,000	26,934	13,092
Establishment	10	2,000	1,000	1,433	717
Total ..	..	85,331	35,361	56,749	31,361
Overhead	10	..	..	3,500+ direction charges.	..

*Except for genetical work which would probably require much longer to lead to results of economic value. But subsequent work may conceivably be placed nunder the willing charge of one of the provincial Governments.

42. A part of the non-recurring expenditure would lead to the creation of capital assets—

	Original cost.
	Rs.
Propagation and Pot Culture house	4,500
Laboratory and office with equipment ..	57,800
Residential quarters	39,000
Total ..	101,300

The disposal of these assets on the termination of the research scheme requires consideration.

43. As already pointed out the expenditure on nurseries may be recouped from the sale of plants if this is agreed upon. Conceivably test plots might also be managed at the expense of the local authorities directly interested. Whether provincial Goverunments could not be asked to contribute towards the general expenses of the scheme might also be usefully considered.

S. C. SEN,

Superintendent,

Cinchona Cultivation in Bengal.

MUNGPOO,

1st November 1939.

APPENDIX XLIX.

Note on Subject No. 20 (g) :—Application from the United Planters' Association of Southern India for a total grant of Rs. 26,380 spread over a period of three years and three months, for a scheme of research into the cultivation, diseases and pests of cardamom.

A three-year scheme for investigation into the cultivation, diseases and pests of cardamom, with special reference to the 'marble disease' to be causing a great deal of damage to the crop in Travancore and the Anamallais has been received from the United Planters' Association of Southern India (Annexure). The total cost of the scheme is Rs. 22,380. In addition to the main scheme a preliminary survey of the cultivated areas, methods of cultivation and the diseases and pests of the crop, extending over a period of three months has been suggested. This survey is expected to reveal the probable causes of the diseases, their nature and the methods of attack of the problem. For this survey, the United Planters' Association of Southern India propose to lend the services of their Coffee Scientific Officer, whose pay, travelling allowance and other contingent expenditure the Council will have to meet. This amounts to Rs. 4,000 thus raising the total cost of the scheme to Rs. 26,380.

The proposals are for the consideration of the Advisory Board. They will first be examined by an *ad hoc* committee whose report will be submitted to the Advisory Board in due course.

ANNEXURE.

LETTER FROM A. G. ACASTER, ESQ., M.A., SECRETARY, UNITED PLANTERS' ASSOCIATION OF SOUTHERN INDIA, "GLENVIEW", COONOOR P. O., TO THE SECRETARY, IMPERIAL COUNCIL OF AGRICULTURAL RESEARCH, SIMLA, No. D. C.-25, DATED THE 15TH SEPTEMBER 1939.

Cardamom Agricultural Research.

I am directed to forward for the consideration of the Advisory Board of the Imperial Council of Agricultural Research at its next meeting certain draft proposals for an investigation into the pest and diseases situation in cardamom cultivation. Cardamom growers have, in recent years, increasingly demanded such an investigation. The cardamom crop, of which there are about 17,000 acres in South India alone, has been inadequately served in the past as far as scientific assistance is concerned and has only received such attention as could be spared by officers engaged primarily on other crops. On the other hand, there has been an increasing interest in this crop, especially in the coffee districts, where it has materially assisted the coffee industry during the severe depression of recent years.

It is suggested that the first need is a survey of the South Indian cardamom crop and the outline scheme, of which I now enclose a copy, contains a proposal for such preliminary survey as well as for a three-year investigation into the 'marble' disease of cardamoms.

I am directed to state that my Association is prepared to lend the services of its own Coffee Scientific Officer, Mr. W. W. Mayne, B.Sc., Balehonnur P. O., Kadur District, Mysore, for the preliminary survey if the Imperial Council of Agricultural Research will meet the cost

This will mean placing him on special duty for a period of three months. The proposal for the estimate of expenditure for the preliminary survey, therefore, is based upon his services being utilised for this purpose. If, however, the Imperial Council of Agricultural Research has another qualified officer available for this preliminary survey, then the estimate of cost would be decreased.

I am to ask that this matter may be placed before the Advisory Board of the Imperial Council of Agricultural Research at an early date, as an investigation into diseases in cardamoms is regarded as being urgent.

CARDAMOM RESEARCH.

PROPOSALS FOR THE CONSIDERATION OF THE ADVISORY BOARD OF THE IMPERIAL COUNCIL OF AGRICULTURAL RESEARCH.

A. Outline scheme for an investigation into the 'Marble' disease of Cardamoms.

(1) An examination of recent reports reveals a considerable list of pests and diseases which have been reported by cardamom producers. It is impossible without a survey of the cardamom producing areas to assess the importance of these various problems but at least two of them stand out as of undoubted importance. These are 'Marble' disease and the injury due to Thrips. The latter has received some attention and studies on control measures are in progress at the Mysore Coffee Experiment Station, where the disease has been serious. So far nothing has been done with respect to the 'Marble' disease and there is no published information on the disease.

(2) Estate experience shows it to be a very serious cause of loss of cardamom clumps, which die out and apparently great difficulty is experienced in raising fresh plants in affected areas. The field symptoms—a pale mottling of the foliage, followed by gradual drying up and eventual death of whole clumps—suggests a virus disease but this has not been proved. There is the possibility of the existence of some soil borne disease such as nematodes or some fungus.

(3) It is suggested that an investigation into this disease is urgently needed as it is a serious problem in the more extended areas of cardamom cultivation and although it has not shown itself in serious proportions in Mysore and Coorg where cardamoms are cultivated in small areas, usually scattered in coffee estates or in jungle clearings, it may quite easily extend to them. In outlining this scheme, it is considered that details could be more adequately filled if a preceding survey of the cultivation of this crop in South India was available.

(4) The main direction of the proposed investigation would be to discover the cause of 'Marble' disease, to devise means of bringing it under control and to prevent its spread to other areas, where it is at present apparently absent.

The following outline represents the suggested lines the investigation should take :—

(*a*) *Field Survey of the Disease.*

Distribution in Cardamom Districts, and extent of damage.

Field Symptoms, especially first signs of disease.

Environmental conditions ; soil, shade, climate.

Associated organisms.

(b) *Causation of Disease.*

Study of associated organisms with a view to tests of pathogenicity. This will depend to a considerable extent on the results of the general survey of associated organism.

Failing the presence of a detectable parasitic cause, study of possibility of virus infection, by sap transference, etc.

If a virus is found, studies of the mode of transference. Special attention might be given in this connection to thrips which occur commonly where this disease is serious.

(c) *Sources of Infection.*

Study of possible sources of infection, in the first place, at least, restricted to common plants growing in cardamom areas. Some information on this might arise in the course of the field survey.

Study of possibility of soil or seed borne infection.

(d) *Methods of Control*.—The direction of this work will depend on the results of the earlier work on causation. However, immediate attention could be given to field studies on the efficiency of thorough removal of plants showing infection and the success or otherwise of replanted areas from which infected plants have been taken.

(5) *Location of Work.*—On the whole, the Agricultural Research Institute at Coimbatore seems the most suitable location as facilities for research and supervision exist there and it is reasonably convenient for the Anamallais where there is a considerable area of cardamoms and the disease exists. It would probably be desirable to have a small field laboratory in the affected area.

(6) *Staff and Equipment.*

	Rs.
1 Plant Pathologist at Rs. 150—Per annum ..	1,800
2 Field Men at Rs. 30—Per annum	720
1 Laboratory man at Rs. 25—Per annum	300
Travelling Allowances	1,500
Laboratory Equipment	2,000
Postages and Incidentals	500

This is suggested for the first year. It is desirable that the Pathologist should have some knowledge of Entomology.

In the second year, provision is suggested of an Assistant on Rs. 80 whose qualifications could be left open until the preliminary survey reveals the probable cause of the disease. If it proves to be a virus disease with the possibility of insect transmission, then the assistant should be an Entomologist. The requirements of travelling in the second year could probably be reduced and laboratory requirements increased. It is suggested that the scheme should run in the first instance for three years.

(7) The following is a rough estimate of expenditure :—

Staff.

	1st year. Rs.	2nd year. Rs.	3rd year. Rs.
Plant Pathologist at Rs. 150	1,800	1,800	1,800
Technical Assistant at Rs. 80	..	960	960
2 Fieldmen at Rs. 30	720	720	720
1 Laboratory Man at Rs. 25	300	300	300
Travelling Allowances	1,500	1,000	1,000
Laboratory Equipment	2,000	2,500	2,500
Incidentals	500	500	500
Total	6,820	7,780	7,780

B. Preliminary Survey.

(1) A necessary preliminary to any satisfactory research investigation into pests and diseases in cardamom cultivation is a general survey of conditions of the cardamom crop in South India. The available literature on cardamoms in India is extremely scanty and most of it is now very old. The industry is considerable but has been neglected from the point of view of technical assistance. The difficulty of devising a sound scheme of investigation is increased by the extremely varied systems of cultivation and the absence of much exchange of views on these methods.

(2) Cardamoms are cultivated in Bombay (N. Kanara), Mysore, Coorg, Madras, Cochin and Travancore. At least two distinct varieties are grown and the crop is cultivated as a secondary crop with Area and with coffee, as pure crop in partially cleared jungle plots by small holders and as a large scale plantation crop. These methods involve a wide variety of cultural methods and diverse problems of plant disease and pest invasion.

(3) It is considered that a survey of cardamom cultivation under these diverse conditions is a necessary preliminary to any detailed research scheme and might itself provide useful information for the general benefit of the industry.

(4) Such a survey involving a tour of the cardamom areas of Southern India by an officer familiar with the Western Ghat areas where cardamoms are almost exclusively grown and with some acquaintance with the crop is suggested. The survey would be concerned with the collection of information under the following main heads :—

I. *Conditions of Cultivation* :—

(*i*) Climate and Elevation.

(*ii*) Soil.

(*iii*) Ecological characters of suitable land.

II. *Methods of Cultivation* :—

(*i*) Type ; pure stands, secondary crop, jungle cultivation.

(*ii*) Establishment of plantations.

(*iii*) Methods of Propagation.

(*iv*) Cultural practices, including Manuring, Shade, etc.

(*v*) Replanting.

III. *Yield and Harvesting Methods.*

IV. *Preparation of the Crop for the Market.*

V. *Botanical : Varieties planted, possibilities of Selection.*

VI. *Causes of Loss and Control thereof* :

(*i*) Plant Diseases.

(*ii*) Insect Pests.

(*iii*) Other sources of loss.

(*iv*) Plant protection methods in use.

(5) It is suggested that a tour lasting three months, including the time required for preparation of a report should be sufficient for such a preliminary survey. Visits should be made to the following areas :—

(*i*) Sirsi (N. Kanara).

(*ii*) Mysore (Kadur and Hassan districts).

(*iii*) Coorg.

(*iv*) Nelliampathy Hills (Madras and Cochin).

(*v*) Anamallais Hills.

(*vi*) Cardamom Hills (Madras and Travancore).

A rough estimate of distance to be covered amounts to 2,000 miles.

(6) On the basis of the services of Mr. W. W. Mayne, B.Sc., Coffee Scientific Officer to the United Planters' Association of Southern India, Coonoor, Nilgiris, undertaking this work the cost is estimated as under :—

	Rs.
Special Investigation Officer at Rs. 900 per month	2,700
Travelling, 2,000 miles at As. 8 per mile ..	1,000
Sundries. Collection and despatch of specimens, halting allowances, etc.	300
Total ..	4,000

APPENDIX L.

Note on Subject No. 20 (K) :—Application from the Government of *Travancore for a Grant of Rs. 10,572 spread over three years for a Scheme for the Investigation of the two Major Pests of Cardamom in Travancore.*

The enclosed application (Annexure) received from the Government of Travancore is for a grant of Rs. 10,572 spread over three years for a scheme for the investigation of the two major pests of cardamom in Travancore *viz.*, Thrips and Hairy worm caterpillar. The state agrees to provide the lands required for the field experiments and to meet the cost of the necessary laboratory equipment and other contingent expenditure. The details of the respective contributions of the Council and the State are given below :—

	Rs.	
To be met by the Council.		
1. Entomologist (Rs. 150—10—200) ..	5,760	(3 years).
2. Two Field Assistants (Rs. 25—3—40) ..	2,016	(3 years).
3. Laboratory Attender, (Rs. 20—1—25) ..	756	(3 years).
4. Peon (Rs. 15)	540	(3 years).
5. Travelling allowance	1,500	(3 years).
	10,572	

	Rs.	
To be met by the State.		
1. Land rent for 20 acres at Rs. 100 per acre per annum	6,000	(3 years).
2. Contingencies	1,500	(3 years).
3. Chemicals, etc.	3,000	(3 years).
4. Laboratory equipment	500	(3 years).
	11,000	

The investigations are to be carried out in the Tea Research Laboratory at Munnar belonging to the K. D. H. P. Company, Limited but it is not stated who will guide and control the work.

2. The proposals are for the consideration of the Advisory Board. They will first be examined by an *ad-hoc* committee whose report will be submitted to the Board in due course.

ANNEXURE.

COPY OF LETTER FROM THE CHIEF SECRETARY TO GOVERNMENT OF TRAVANCORE, TRIVANDRUM, TO THE SECRETARY, IMPERIAL COUNCIL OF AGRICULTURAL RESEARCH, NEW DELHI, D. DIS. NO. 2815|39|DEVPT., DATED THE 10TH NOVEMBER 1939.

SUBJECT :—*Twentieth meeting of the Advisory Board.*

With reference to the correspondence resting with my letter D. Dis. No. 2256|39|Devpt., dated the 6th September 1939, on the above subject,

I have the honour to forward herewith a "scheme for the investigation of two of the major pests of cardamom in Travancore" (Enclosure) and to request that the scheme may be taken up for consideration at the twentieth meeting of the Advisory Board.

Printed copies of the scheme will be forwarded to you by the State Director of Agriculture and Fisheries.

ENCLOSURE.

A Scheme for the Investigation of Two of the Major pests of Cardamom in Travancore.

The area under cardamom in Travancore has been increasing steadily for the past several years. The crop now occupies an area of about 52,000 acres, which is considerably more than the total extent under this crop in the rest of South India, comprising Mysore, Madras and Coorg. Travancore contributes nearly 80 per cent of the world's requirement of cardamom. Consequently the economic importance of the crop cannot be over-estimated. Cardamom is cultivated on the hill slopes of the rich *Sholas* of Travancore at elevations ranging from 2,500 to 4,500 feet. Seedlings are raised in specially prepared nurseries and are transplanted when they are about a year old, at the commencement of the South-west monsoon, on lands cleared of unnecessary tree growths and weeds and properly dug up. The plant begins to bear within three or four years after planting out and continues to give a good crop for about 10 or 12 years. It flowers in April—May and the crop is ready for harvest from October—December. The yield varies from 200 to 400 lbs. per acre. Both the Mysore and Malabar varieties are under cultivation in Travancore.

Like the cultivated crops in the plains, cardamom is also subject to various diseases and pests. The most important of the diseases is the Mosaic or the "Marble" disease. The general symptoms are the mottling of the leaves with small brown roundish specks, which widen rapidly and often coalesce. The central portion of the specks assumes a dirty brown colour, that deepens gradually and becomes ash grey on drying up. The entire leaf turns yellow and ultimately withers and dies. The Department of Agriculture in Travancore noticed this disease nearly twenty years ago and found that the best method of checking its spread was to pull out and destroy the badly affected plants, to discourage the practice of propagating from suckers, particularly from infected areas and to raise seedlings from disease-free seeds. A nursery to demonstrate this method of raising seedlings was opened by Government in the High Ranges and large numbers of seedlings from the nursery were distributed to the Planters. The results have been encouraging.

Although the mosaic disease has not yet been stamped out, the greatest harm that is now done to the crop is by the appearance of two serious pests *viz.*, the Thrips and the Hairy Worm Caterpillar. The former causes incalculable injury to flowers and young pods and the latter defoliates the plants completely. Thereby the yield is enormously reduced. The occurrence of the pests was reported about three or four years ago and they have now spread virtually over about 50 per cent. of the area under cardamoms in the State. As a result of the wide-spread attack of these two pests, the yield of cardamoms from the Cardamom Hills has been

reduced to a fourth of the normal yield during the past three or four years. The damage done to the cardamon industry is considerable. The control of the pests is therefore a very important problem which demands and deserves close investigation. Preliminary trials of different insecticides conducted by the Department of Agriculture have shown that spraying with tobacco leaf decoction and dusting with sulphur may control thrips to some extent and that spraying with fish-oil soap may reduce the intensity of the attack of the Hairy Worm Caterpillar. But more careful and systematic investigations are necessary for devising methods of exterminating these major pests. For this purpose the assistance of the Imperial Council of Agricultural Research is sought.

The line of work proposed to be carried out is indicated below :—

I.—*Thrips.*

(a) A full and detailed study of the habits and life-history of the insect. Rate of multiplication, number of broods in the years, seasonal and weather conditions favourable to active breeding.

(b) Detailed observations on the nature of the injury caused to the plant during the various stages of the growth of the crop.

(c) Suitable time of the year for successfully tackling the pest.

(d) Laboratory and Field experiments to determine the comparative effects of resorting to various insecticides and other control measures.

(e) Biological control methods. Study of the occurrence of natural enemies, if any, such as fungoid diseases, insect predators, parasites, etc.

II.—*Hairy Worm Caterpillar.*

(a) A full and detailed study of the life history, number of broods in the year and conditions congenial for active breeding.

(b) The nature of the damage caused to the plant during the various stages of its growth.

(c) The best time of the year for combating the pest.

(d) Laboratory and Field experiments to test the relative effects of the various insecticides and other control measures.

(e) Investigation of the occurrence of natural enemies, if any.

Where the Investigation is proposed to be carried out.

There is a fairly well-equipped Tea Research Laboratory at Munnar belonging to the K. D. H. P. Co., Ltd. It is electrified and provided with adequate supply of water, etc., and the investigations may be carried on there. There are cardamom plantations afflicted with these pests, situated within a radius of 10 to 15 miles from Munnar.

The Travancore Government will provide the lands required for carrying on the connected field experiments. They will also meet the cost of equipment and incur the necessary contingent expenditure. The assistance now applied for is in respect of the staff to be employed for

undertaking the investigations. The cost on this account for a three year period in the first instance is estimated below :—

Serial No.	Details.	Year. 1st.	2nd.	3rd.	Total.
		Rs.	Rs.	Rs.	Rs.
1.	1 Entomologist (Rs. 150—10—200) ..	1,800	1,920	2,040	5,760
2.	2 Field Assistants (Rs. 25—3—40) ..	600	672	744	2,016
3.	1 Laboratory Attender (Rs. 20—1—25)	240	252	264	756
4.	1 Peon (Rs. 15)	180	180	180	540
5.	Travelling allowance	500	500	500	1,500
	Total ..	..	..	..	10,572

The following statement shows the expenditure proposed to be contributed by the Travancore Government :—

Serial No.	Details.	Year. 1st.	2nd.	3rd.	Total.
		Rs.	Rs.	Rs.	Rs.
1.	Land rent for 20 acres @ Rs. 100 per acre per annum	2,000	2,000	2,000	6,000
2.	Contingencies	500	500	500	1,500
3.	Chemicals, insecticides and other appliances	1,000	1,000	1,000	3,000
4.	Laboratory equipment	500	..	..	500
	Total ..	..	..	..	11,000

The relative contributions of the Imperial Council of Agricultural Research and the Travancore Government will be as follows :—

	Rs.
Contribution from the Imperial Council of Agricultural Research	10,572
Contribution from the Travancore Government	1,000
Ttal ..	21,572

The results of the investigations in question will be of immense benefit not only to Travancore but also to Madras, Mysore and Coorg, where there are fairly extensive areas of cardamoms and where the pests described above prevail.

It is requested that the Imperial Council of Agricultural Research be pleased to consider the scheme favourably.

K. R. NARAYANA IYER,

Director of Agriculture and Fisheries.

APPENDIX LI.

Note on Subject No. 20 (i) :—Application from the Government of Sind for a Grant of Rs. 33,600 spread over five years for a Scheme of Research on bidi Tobacco.

An application has been received from the Government of Sind for a grant of Rs. 33,600 spread over five years for a scheme of research on *Bidi* tobacco in Sind (Annexure). This includes a non-recurring expenditure of Rs. 1,900 for erecting a shed for curing purposes. The Sind Government proposes to make no contribution towards the cost of the scheme but will provide facilities of the nature of free land, water and bullock power, and services of the Botanist and Agriculturist, who is already engaged on this work, for breeding and general work respectively.

2. It may be mentioned in this connection that at the last meeting of an *ad hoc* Tobacco Sub-Committee and the Advisory Board held in May 1939, the question of the need for co-ordinated research on tobacco other than cigarette tobacco was considered. The Board felt that very little work had been done for the improvement of the outturn and quality of the *hookah* and *bidi* types of tobacco, and more research on these types was called for. It was recommended that the departments interested in this aspect of tobacco research should work out the exact lines along which further investigations are required and put up their proposals. This scheme is the outcome of above recommendations which were brought to the notice of the Provincial Governments.

3. The scheme will first be examined by the Botany and Physiology Committee, whose report will be submitted to the Board in due course.

ANNEXURE.

COPY OF A LETTER No. 1937/95/23-E., PART II, DATED THE 2ND OCTOBER 1939, FROM THE SECRETARY TO THE GOVERNMENT OF SIND, REVENUE DEPARTMENT.

Scheme for research on *Bidi* tobacco in Sind.

I am directed to transmit an advance copy of the marginally noted research scheme for consideration at the twentieth meeting of the Advisory Board of the Imperial Council of Agricultural Research.

Scheme for research on Bidi *tobacco in Sind.*

Introduction.—The Department of Agriculture in Sind have been conducting research on the cigarette varieties of tobacco with a view to introduce them in the Province. Tobacco is a money crop and is likely to prove popular with the cultivator, if he gets as much cash return from it as from the major crop, like cotton, etc. The cultivation has so far been confined to the *Hooka* varieties, namely ' Acho ' and ' Karo '. The area under this crop now stands at 6,000 acres in British Sind. Lately the Department of Agriculture in Sind has been trying the cultivation of the cigarette varieties and have found that Harrison Special, Adcock and Pusa 142 grow very well at Sakrand. A flue barn has been recently erected and equipped and one graduate assistant has been especially trained in the flue-curing of tobacco at the Imperial Agricultural Research Institute. The crop grown at Sakrand will be cured in the coming season and its burning qualities and market value assessed.

Present position and work done, etc.—Besides general cultivation, manurial work, sowing date experiment, water requirements are all being done in some detail for these cigarette varieties. An experiment has also been laid down to work out the cost of cultivation of this crop as compared with other main crops.

While this is being done by the Sind Department of Agriculture, considerable scope exists in evolving '*Bidi*' type of tobacco in this Province. At present most of the *Bidi* type tobacco is imported from Nadiad, Bombay Presidency. Nadiad and neighbouring areas in North Gujrat and Kolhapur and to a certain extent Southern Marahatta country and Satara District in Western Deccan are the chief *Bidi* tobacco growing areas in Western India. The varieties grown are (1) Gandio types, (2) Kari Baglani, (3) Bhopli, and (4) Shendi Surti.

Preliminary work on the *Bidi* tobacco has been started at the Agricultural Research Station, Sakrand. Gandio No. 6, an improved variety from Nadiad (Gujrat), has been under trial. It gives a yield of about 2,500 lbs. (dry leaf) per acre under Sind conditions. The curing could not be done successfully. A more detailed study was started last year but an unusually early frost in November damaged the crop. The work is being continued for the detailed study of characters.

This preliminary work has shown that Gandio variety at least can be successfully cultivated in Sind and what is wanted is the trial of other varieties and also breeding out of new varieties due to special climatic conditions in Sind. Tobacco in Sind is an irrigated crop and is sown in nurseries in June-July and transplanted during the month of August. June and July are very hot months in Sind. There is also usually frost in December or January. A variety to be successfully cultivated in Sind should stand these extreme climatic conditions, particularly its susceptibility to damage by frost should be small.

Curing has to be standardised so as to obtain a high quality of cured leaf. The curing for *Bidi* purposes is not quite the same as that for cigarette tobacco. Sun-curing is usually practised for *Bidi* purpose.

Considerable amount of work on tobacco has been done at the Imperial Agricultural Research Iustitute and other research centres in India. Lately the Imperial Council of Agricultural Research have started a research station at Guntur (Madras Presidency). This station at Guntur deals chiefly with the cigarette varieties.

In Sind, the work on cigarette tobacco will continue to be done by the Department of Agriculture in Sind and this Scheme is submitted to the Imperial Council of Agricultural Research Institute for research work on tobacco, mainly for *Bidi* making for which there is still considerable demand. The programme of work and the staff required is given below :—

Programme of work :—

1. Trial of varieties from Nadiad and other places in India.
2. Breeding of varieties suitable for *Bidi* tobacco.
3. Suitable methods for curing these types of tobacco.
4. Manurial and cultural experiments on promising varieties.
5. Survey of the diseases and pests on these types.

6. Root study of the different varieties of tobacco, imported from outside the Province.

Staff.—There is already a Tobacco Assistant dealing with research on the cigarette varieties of this crop. His services will be available for this extension of work also. The additional staff and contingencies required are :—

1. One Senior Assistant in the grade of Rs. 160—10—260.
2. One Graduate Assistant in the grade of Rs. 110—8—150.
3. One non-graduate Assistant in the grade of Rs. 30—30—35—5/2—60—4—100.
4. One Jemadar—Rs. 20 per mensem fixed pay.
5. Recurring contingencies—Rs. 2,000 a year.
6. Non-recurring—Rs. 1,000 for building the curing shed.

Financial Aspect.—The total cost of the scheme for five years will be Rs. 33,600 and the average cost per year amounts to Rs. 6,720. The scheme is submitted to the Imperial Council of Agricultural Research for favourable consideration. The Scheme will be located at Sakrand. The Local Government, in addition to giving the services of their Tobacco Assistant partially for this work, would provide free land, water and bullock power and the supervision of the Botanist for breeding work. It is requested that the scheme be sanctioned for a period of five years. The new varieties evolved will be made available to other research stations in India.

TOBACCO SCHEME.

Financial Statement.

—	First year.	Second year.	Third year.	Fourth year.	Fifth year.	Total Rs.
1. Senior Assistant, 160—10—260	1,920	2,040	2,160	2,280	2,400	10,800
2. One Graduate Assistant, 110—8—150.. ..	1,320	1,416	1,512	1,608	1,704	7,560
3. One Non-graduate Assistant, 30—30—35—5/2—60—4—100	360	360	420	420	480	2,040
4. One Jamadar on Rs. 20 p. m.	240	240	240	240	240	1,200
5. Contingencies ..	2,000	2,000	2,000	2,000	2,000	10,000
6. Travelling Allowance ..	200	200	200	200	200	1,000
	6,040	6,256	6,532	6,748	7,024	32,600
7. Non-recurring capital for erecting a shed for curing	1,000	..	..	..	..	1,000
	7,040	6,256	6,532	6,748	7,024	33,600

APPENDIX LII.

Note on Subject No. 20 (j) :—Application from the Government of Bombay for a Grant of Rs. 41,630 spread over three years for a Scheme of Research on the Improvement of the Pulse Crop in Bombay.

The attached application (Annexure) from the Bombay Government is for a grant of Rs. 41,630, inclusive of Rs. 1,000 for Capital expenditure, spread over three years, for a scheme of scientific research on the improvement of pulse crop in Bombay. The work on the scheme will be carried out at three centres—Poona, Dharwar and Jalgaon—under the supervision of the Crop Botanist to the Government of Bombay. The Provincial Government are prepared to contribute 50 per cent of the cost of the scheme.

2. It may be recalled that at its meeting held in November 1938, the Advisory Board discussed the importance of pulses in relation to agricultural planning and national nutrition. It was agreed that pulses were very important in relation to nutrition and that the Provincial Agricultural Departments should conduct preliminary trials with pulses and select those best suited to them agriculturally. The Governing Body also agreed that such schemes should receive special consideration. This recommendation has already been brought to the notice of the Provincial Governments.

3. The Bombay Government's proposals are for the consideration of the Advisory Board. They will first be considered by the Botany and Physiology Committee whose report will be submitted to the Board in due course.

ANNEXURE.

COPY OF A LETTER FROM THE JOINT SECRETARY TO THE GOVERNMENT OF BOMBAY, TO THE SECRETARY, IMPERIAL COUNCIL OF AGRICULTURAL RESEARCH, No. 1644-A.|39, DATED THE 27TH OCTOBER 1939.

SUBJECT :—*Pulse crops. Scheme for scientific research work on improvement of—*

I am directed to forward for the consideration of the Imperial Council of Agricultural Research a scheme (Enclosure) submitted by the Director of Agriculture for scientific research work on the improvement of pulse crops. The urgency of work on the improvement of this important class of foodcrops has been stressed by Sir John Russell in his report on Agricultural Research in India and the Imperial Council of Agricultural Research has also included the work in the list of subjects upon which more scientific research work has been considered to be necessary. The research work under the scheme will be carried at three centres, *viz.*, Poona, Dharwar and Jalgaon and will be supervised by the Crop Botanist to Government. The scheme was placed before the Bombay Provincial Agricultural Research Committee at its meeting held in August 1939, and was approved by it subject to certain minor modifications which have been incorporated in the scheme as now submitted to the Council.

2. The scheme is estimated to cost Rs. 41,630 spread over 3 years of which Rs. 1,000 represent capital, *i.e.*, non-recurring expenditure and Rs. 40,630 recurring. If the scheme is approved by the Imperial Council of Agricultural Research the Government of Bombay will be prepared to contribute 50 per cent. of the total cost thereof.

3. 150 printed copies of the scheme are forwarded herewith.

ENCLOSURE.

Scheme for Scientific Research Work on the Improvement of Pulse Crops.

(For a period of 5 years at a total cost of Rs. 41,630.)

1. Introduction.

Pulses form a very important item of diet of the people of India and the cultivation of pulse crops has been in practice in all Provinces and States for many centuries.

These crops are the main source of protein to the bulk of the population who do not eat meat, or who only consume it sparingly. The development of pulse cultivation, both in the direction of quantity and quality, is therefore intimately connected with the improvement of the dietary of the majority of the population of the country, particularly in rural areas.

In addition, the majority of pulse crops cultivated in India supply large quantities of highly nutritious fodder for cattle, thus again indirectly contributing to an improved dietary for human beings by increasing the supply of animal husbandry products such as milk, ghee, butter, etc.

Finally, pulse crops are, in many cases, useful for green manuring purposes and form very valuable rotational crops due to the presence of root nodules containing nitrogen fixing bacteria. They are all leguminous and their cultivation is restorative and important in the maintenance of soil fertility.

2. Need for research on pulses.

Sir John Russell in his Report on the work of the Imperial Council of Agricultural Research stresses the need for scientific research work on pulse crop improvement particularly in view of their importance as sources of protein.

A review of previous work done in India on pulse crop improvement is given below :—

Bose (Pusa) has studied "mug" (*Phaseolus radiatus Lin*) and "udid" (*Phaseolus mungo Lin. var. Roxb. Prain*) and gives their mode of pollination, fertilization, variations in characters of the plant and its parts. He also isolated and classified the types. Howard and Khan have studied pollination in "tur" (*Cajanus indicus*) and Narasinham in "udid" and "mug" in Godaveri District. Dixit has worked out the cytology of *desi* and *kabuli* gram (*Cicer arietinum*) and has described a new giant type of this pulse. Howard and Khan have studied varieties of Indian gram and *lang* (*Lathyrus sativus*) and classified them. Shaw and Bose have studied lentil (*Ervum lens*). Classification of "tur" varieties has been made by Shaw et al. Bose and Joglekar have studied the

root system of green and black grams. Roy has worked on the development of the female gametophyte in some leguminous crops of India. Inheritance of seed-coat colour in *Phaseolus lunatus* ; petal colour in gram ; flower, pod and seed-coat colour in " tur " ; and seed characters in gram have been studied by Rhind, Khan and Akhtar, Dave and Singh and Ekbote respectively.

With regard to diseases of pulses Butler has studied wilt in " tur " and Luthra et al have isolated the organism causing gram blight. McRae and Shaw have selected a wilt-resistant type of " tur ". Leaf-spot disease of " tur " blight diseases of some cultivated legumes and gram-wilt, have been studied and described by Singh, Sattar and Dastur respectively. Mundkur has worked on the relation of temperature and maturity to wilt in Sann hemp and " tur ". Uppal et al have described a new variety of fungus causing powdery mildew in *Dolichos lablab*.

An abstract of papers published on scientific work on pulses in India is attached. (Statement B.).

This brief, and possibly incomplete, summary shows that scientific work on the improvement of the pulse crops of India has not, in the past, been directed to any great extent towards the economic aspects of this class of crop, *i.e.*, yield, quality, etc. In many Provinces and States, pulse crops have received attention on Government Research Stations and Farms but such work has been largely directed towards solution of local problems, *e.g.*, disease resistance, etc. In Bombay Province, such work in the past has been restricted to (*a*) the isolation of gram types suitable for Khandesh and (*b*) evolution of wilt resistant gram strains for the Karnatak. The Governing Body of the Imperial Council of Agriculture, while reviewing the research programme of the Council, included " pulses " in the list of subjects upon which it considered that more research should be done (reference letter No. F. 8|38-G., dated 18th November 1938, from the Secretary, Imperial Council of Agricultural Research, to all Provincial Governments and constituent States.

3. Pulse crop cultivation in the Bombay Province.

The following table gives the most important pulse crops of the Bombay Province, together with their actual acreage in the year 1937-1938 :—

TABLE I.

Serial No.	Name of the Pulse crop	Area in acres in 1937-1938.	Remarks.
1	Gram (Chana)	673,939	Ref: Season and Crop-report (latest), Dept. Agri., Bom.
2	*Kulthi* (Horse gram)	638,067	
3	*Tur* (Pigeon pea)	395,427	
4	*Udid* (Black gram)	291,040	
5	*Math* (Kidney bean)	224,586	
6	*Mug* (Green gram)	174,055	
7	*Wal* (Indian bean)	112,216	
	Total ..	2,509,330	

The figures show that pulses are grown on a very large scale in Bombay Province and that it is a suitable centre for scientific research work on the improvement of this class of crops in India. Statement A attached gives the distribution of the main pulse crops in the Bombay Province.

4. NATURE OF RESEARCH WORK PROPOSED UNDER THE SCHEME.

The general purpose of the proposed research scheme is to carry out scientific botanical research work on the improvement of the economic characters, particularly yield, of the following six main pulse crops, cultivated in the Province of Bombay, *viz.*, gram (*Cicer arietinum*), kulthi (*Dolichos biflorus*), tur (*Cajanus indicus*), udid (*Phaseolus mungo Lin. var. Roxb. Prain*), math (*Phaseolus aconitifolius*) and mug (*Phaseolus radiatus Lin.*). The aim of improvement will be to isolate pure breeding types giving higher yield of grain and fodder from the highly heterozygous material cropped at present. In " tur " and gram, types will be selected which, in addition to possessing superior economic characters, will also be resistant to wilt disease.

The characters in which the pulses vary and those which require improvement by breeding are given below :—

Gram.—Varies widely in yield, time of maturity, nitrogen content, quality, size, shape and colour of seed, colour on vegetative and floral parts. Four varieties exist, *viz.*, black, red, yellow or white. The first three are grown in mixed condition. Yellow commands a higher price. Selection of high yielding, early maturing, yellow seeded types should be aimed at.

Kulthi.—It is of importance to cultivators of poor tracts. Variation in yield, time of maturity, nitrogen content, habit of growth, shape, size and colour of seed is observed in the crop grown at present. Early maturing, prolific types with high food value and hardy types suitable for low rainfall tracts are required to be selected.

Tur.—Variation in yield, size, shape and colour of pods, number, size and colour of seed occur at present. Types characterised by higher yield, earliness, higher nitrogen content, *erect habit, resistance to wilt* and " tur " pod caterpillar, desirable seed and cotyledon colour should be selected.

Udid.—Variations in habit, duration, morphological character and yielding capacity characterize the existing types. It is necessary to select higher yielding strains rich in food value.

Math.—Varies in characters such as yield, time of maturity, drought resistance, colour, shape, size and weight of seed. Early maturing, drought-resistant, high yielding types are to be selected.

Mug.—Types varying in habit of growth, seed and other botanical character exist. High yielding green coloured, large seeded types, richer in albuminoids and earlier in maturing should be selected.

A note on the pulse crops upon which scientific research work is prepared under this scheme, giving their main uses, etc., and possibilities of improvement by botanical work is attached (Statement A.).

5. POSSIBLE PERIOD REQUIRED TO OBTAIN PRACTICAL RESULTS.

The time required for purifying and fixing desirable types in the case of *tur*, which is cross-fertilized to some extent, will be at least five years,

perhaps longer. In the case of those pulses which are self-fertilized, isolation of pure, high yielding types would be practicable in five years. If breeding work is to be undertaken the period required would have to be extended by another five years.

6. GENERAL PLAN OF RESEARCH WORK PROPOSED.

Under the Scheme, it is proposed that botanical work on the improvement of the six important pulse crops, mentioned in paragraph 4 above, will be carried out at three centres in the Bombay Province, as under :—

Breeding Station or Sub-station.	Crops.
(a) Central Breeding Station at Agricultural College, Poona.	1. Gram. 2. Math.
(b) Sub-station at Jalgaon, East Khandesh District.	1. Gram. 2. Math. 3. Udid.
(c) Sub-station at Dharwar Government Farm, S. M. C.	1. Mug. 2. Kulthi. 3. Tur.

The general supervision and direction of the work at all centres will be done by the Economic Botanist to Government of Bombay who will be provided with a Graduate Assistant, with special training in botanical work, in charge of each centre. The work will be linked up with the work on wilt resistance which is being carried out by the Plant Pathologist to Government at the Agricultural College, Poona. The scheme, as submitted, is for a period of five years.

7. FINANCE.

The total expenditure involved under the Scheme over a five year period is Rs. 41,630, divided among the three centres as under :—

	Rs.
(a) Poona Station	16,960
(b) Jalgaon Sub-station	12,585
(c) Dharwar Sub-station	12,085
Total ..	41,630

This total expenditure is made up as follows :—

1. Capital, *i.e.*, non-recurring Rs. 1,000.
2. Recurring :—

	Rs.
(a) Establishment	25,740
(b) Contingencies	11,140
(c) T. A. & Honoraria	3,750

Details of the expenditure proposed at each centre—and in each year—are given in estimates A, B and C attached.

ESTIMATE A.

Budget Estimates of the Scheme for breeding pulses (Kulthi, Gram and Math) for a period of five years at the Poona Agricultural College, under the Economic Botanist to Government, Bombay Province, Poona.

No.	Item.	1st year.	2nd year.	3rd year.	4th year.	5th year.	Remarks.
		Rs.	Rs.	Rs.	Rs.	Rs.	
	Non-recurring expenses.						
1	Wire fencing for 3 acres	500	..	..	..	..	
	Total ..	500	..	..	..	..	
	Recurring expenses.						
	Establishment.						
2	One Breeder, to start on Rs. 75 (in the grade of Rs. 60—60—70—5—100).	900	960	1,020	1,080	1,140	
3	One Kamgar (Rs. 30—35—5/2—60)	360	420	420	480	480	
4	One Mali (Rs. 20—1—25)	240	252	264	276	288	
	Total ..	1,500	1,632	1,704	1,836	1,908	
	Allowances and Honoraria.						
5	Travelling allowance (*a*) Economic Botanist ..	300	300	300	300	300	For collection of district samples.
	(*b*) Establishment	250	250	250	250	250	
	Total ..	550	550	550	550	550	
	Contingencies.						
6	Rents, Rates and Taxes	125	125	125	125	125	5 acres of land.
7	Cultivation charges	500	500	500	500	500	Including summer ploughing, etc.
8	Cloth bags for selfing	150	150	150	150	150	For storage of seed, etc.
9	Stationery	30	30	30	30	30	
10	Apparatus and Chemicals	300	150	75	50	50	
11	Miscellaneous expenses such as repairs, etc.	50	50	50	50	50	
12	Dead stock, tools, furniture, etc.	150	20	20	20	20	
	Total ..	1,305	1,025	950	925	925	
	Grand Total ..	3,855	3,207	3,204	3,311	3,383	Total cost is Rs. 16,960.

ESTIMATE B.

Budget Estimates of the Scheme for breeding pulses (Math, Gram and Udid) for a period of five years at Jalgaon Sub-station in East Khandesh District under the Economic Botanist to Government, Bombay Province, Poona.

No.	Item.	1st year.	2nd year.	3rd year.	4th year.	5th year.	Remarks.
	Non-recurring expenses.						
1	Wire fencing for 3 acres	500	..	..	..	..	
	Total ..	500	..	..	..	..	
	Recurring expenses Establishment.						
2	One Breeder starting on Rs. 75 in the grade of (Rs. 60—60—70—5—100).	900	960	1,020	1,080	1,140	
3	One Kamgar (Rs. 30—35—5/2—60)	360	420	420	480	480	
4	One Mali (Rs. 20—1—25)	240	252	264	276	288	
	Total ..	1,500	1,632	1,704	1,836	1,908	
	Allowances and Honoraria.						
5	Travelling allowances	100	100	100	100	100	For collection of district samples, and arranging variety trials, etc., for 3 acres of land.
	Contingencies.						
6	Rents, Rates and Taxes	75	75	75	75	75	
7	Cultivation charges	300	300	300	300	300	Including summer ploughing, etc.
8	Cloth bags for selfing	100	100	100	100	100	For selfing and storage of seeds.
9	Stationery	30	30	30	30	30	
10	Miscellaneous	50	50	50	50	50	
11	Dead stock, plants, tools, furniture, etc.	150	20	20	20	20	
	Total ..	705	575	575	575	575	
	Grand Total ..	2,805	2,307	2,379	2,511	2,583	Total cost Rs. 12,583.

ESTIMATE C.

*Budget Estimates of the Scheme for breeding pulses (**Kulthi, Tur and Mug**) for a period of five years at the Government Research Station, Dharwar, in Dharwar District under the Economic Botanist to Government, Bombay Province, Poona.*

No.	Item.	1st year.	2nd year.	3rd year.	4th year.	5th year.	Remarks.
	Recurring charges Establishment.						
1	One Breeder starting on Rs. 75 in the grade of (Rs. 60—60—70—5—100).	900	960	1,020	1,080	1,140	
2	One Kamgar (Rs. 30—35—5/2—60)	360	420	420	480	480	
3	One Mali (Rs. 20—1—25)	240	252	264	276	288	
	Total ..	1,500	1,632	1,704	1,836	1,908	
	Allowances and Honoraria.						
4	Travelling allowances	100	100	100	100	100	For collection of district samples and arranging trials, etc.
	Contingencies.						
5	Rents, Rates and Taxes	75	75	75	75	75	For 3 acres of land.
6	Cultivation charges	300	300	300	300	300	Includes summer ploughing, etc.
7	Cloth bags for selfing	100	100	100	100	100	For selfing and storage of seed.
8	Stationery	30	30	30	30	30	
9	Miscellaneous, such as repairs, etc.	50	50	50	50	50	
10	Dead stock, plants, tools, furniture, etc.	150	20	20	20	20	
	Total ..	705	575	575	575	575	
	Grand Total ..	2,305	2,307	2,379	2,511	2,583	Total cost Rs. 12,085.

STATEMENT A.

[Note on the pulse crops upon which scientific research work is proposed under this scheme, giving their main uses, etc., and possibilities of improvement by botanical work.]

I. Gram (Cicer arietinum L).

The main pulse crop grown in the Bombay Province is gram. This crop is extensively cultivated in the Deccan districts and is also widely grown as a *rabi* crop in Gujarat and the Karnatak. The average area and outturn of gram for the past three years in this Province are 668,319 acres and 97,989 tons respectively. The total acreage of gram in India during the years 1934-35 and 1935-36 was 1,37,32,519 and 1,48,96,657 acres respectively, which indicate the importance of the crop in this country.

Export from India and Bombay.—The following figures show the quantities in tons of gram exported from India and Bombay, during the years 1936-37 and 1937-38 :—

India.		Bombay.	
1937-38.	1936-37.	1937-38.	1936-37.
Tons.	Tons.	Rons.	Tons.
21,749	23,860	3,803	2,746

The value in rupees of gram exported from India and Bombay for the following years is :—

India.		Bombay.	
1937-38.	1936-37.	1937-38.	1936-37.
Rs.	Rs.	Rs.	Rs.
22,75,471	22,18,719	6,14,521	4,28,941

The above figures show that Bombay claims a very large share (about 20 to 30 per cent.) of the total money value, realized annually by India, by way of export of gram.

Yield and uses.—Gram is grown in all kinds of soils but it yields its highest on heavy clay soils ; on light soils it is generally grown as a mixed crop. The dry crop yields about 500 lbs. per acre in Gujarat and Khandesh, while, in the other parts of the Province, the yield ranges from 350 to 450 lbs. per acre. Gram is often grown mixed with other rabi crops.

The gram plant is useful in a variety of ways ; both the leaves and grain are used as vegetables. The foliage is often sun-dried and preserved to be used as a green vegetable when required. The grain is eaten green ; when ripe it is split into *dal,* which is used in various ways in cookery. The grain is a common ration for horses and sheep. The dry fodder forms good cattle food. Gram is a very valuable rotation crop, and, as it shades the ground it suppresses weeds, and leaves the land clean and enriched for the succeeding crop.

Breeding possibilities.—The crop varies widely in yield, time of maturity, seasonal and cultural requirements, nitrogen content, quality, size, shape and colour of seed, colour on vegetative and floral parts. There are four varieties of gram which differ in the colour of the seed coat which may be black, red, yellow, or white. The first three are grown in a mixed condition ; the pure yellow gram commands a higher price than the mixture. The large white grained gram is known as " Kabli " and is used for special purposes and needs to be introduced on a larger scale. Gram is mostly a self-fertilized crop and affords good scope for improvement on account of variation in the above economic characters.

II. Kulthi (Dolichos biflorus L).

Kulthi stands second as a pulse crop in the Province of Bombay. It occupied about six lakhs of acres during 1937-38. The usefulness of *Kulthi* as cattle food of a very high nutritive value is well-known. The Deccan and Karnatak, with Ratnagiri in the Konkan, occupy over 98 per cent. of the total area under kulthi in the Bombay Province.

Yield and uses.—*Kulthi* is essentially a light soil crop and is extensively grown on the light red stony soils of the Deccan. On a light soil with moderate rainfall it grows better than any other pulse. It is mostly grown as a *kharif*, raw or mixed crop with *bajri* and it is also grown in the *rabi* season, as a second crop in rice beds. It is often grown as a sole *kharif crop.* The crop is not irrigated. If sown as a *kharif* crop in July, it matures in November. The seed is eaten in soup and porridges, it is also cooked as vegetable specially in Karnatak and Konkan. The seed is boiled whole and fed to horses. It is a very nutritive food for working cattle. The higher percentage of albuminoids and digestible carbohydrates present in the seed make it an ideal, yet cheap, food for cattle. The *bhusa* or chaff obtained from *kulthi* is a very fine fodder and green plants, in the flowering stage, form an excellent food for farm stock. *Kulthi* is exported from India on a fairly large scale for use as food for livestock. It comes under the general term " Gram " in the export statistics of pulses from India.

Breeding possibilities.—Kulthi is mostly a self-fertilized crop. It is a hardy crop growing successfully on poor lands, receiving moderate rainfall. Such a crop is undoubtedly of very great importance to the cultivators of the poorer tracts. There is great variation in the yield, time of maturity, nitrogen content, habit of growth, its ecological adaptations, and in the shape, size and colour of the seed. Selection of early maturing, prolific types, with a high food value, is needed. Hardy types suitable for low rainfall tracts could be evolved by breeding. So far no work on the improvement of this crop has been undertaken in this Province.

III. Tur (Cajanus indicus, Spreng).

Tur is a very imporatnt pulse crop on account of the extensive use of the split seed (dal) in cookery. This *dal* is used more commonly than *gram dal* in the usual diet of the public. The crop is mostly grown in the Deccan and Karnatak, and to a lesser extent in Gujarat. Satara and Dharwar are well-known for the production of a higher yield than any other district of the province. The average area and outturn in this Province for the past three years is 397,491 acres and 97,651 tons respectively which shows that *tur* stands second to gram in importance as a pulse crop. Gujarat also grows this crop to a considerable extent. A few thousand acres are also grown in the rice growing tracts of the Konkan. *Tur* is important crop from the point of view of human dietary and nutritive value.

Yield and uses.—Tur is generally grown as a subordinate or mixed crop with jowar or bajri. It prefers a medium moist soil. It has a very good root system, by virtue of which it can draw moisture from a soil apparently parched and can keep green during a rainless period of about six months from October till March. *Tur* stands in the forefront among pulses as a rotation crop. Being a deep-rooted leguminous crop, it penetrates into the deeper layers, thus aerating the soil and sub-soil which it enriches in nitrogen content on account of the bacterial nodules borne on its roots. The vegetative parts of this plant add a lot of organic matter to the soil by way of a heavy top dressing of shed leaves and flowers and thus it improves the fertility and texture of the soil very greatly. *Tur* pods and ripe seeds are eaten as vegetables. It is very extensively used as "dal", *i.e.*, split grain. This is one of the main sources of protein in the ordinary Indian vegetarian diet.

The leaves and pod-shells are used in stall feeding of cattle. It is undoubtedly a very valuable crop whose yield varies from 200 to 500 pounds per acre. As much as 1,800 pounds as a sole crop has been recorded in Upper India.

Breeding possibilities.—The crop is mostly cleistogamous and hence is naturally self-pollinated, although as much as 8 per cent of crossing due to insects has been noted in some varieties in Bihar. Early maturing, hardy types are required by cultivators. Long flowering types are not desirable as the first formed pods dehisce and shed their grain before the general harvest. Erect types are required for ease of inter-tillage. There are two types of *tur* (1) types which are early maturing and dwarf in habit which constitute the *tur* proper grown on the plateaux of Central Provinces, Central India and the Deccan Peninsula, and (2) late and tall forms known as "Arhar" grown in Bengal, United Provinces and Northern India. There is very considerable variation in the yield of the crop grown in Bombay. Apart from earliness and erect habit of growth, yield is the primary consideration and hence high yielding pure forms are required to be evolved by scientific breeding. The pods vary in size, shape and colour. Some pods are green, brown or streaked and blotched. They may have constructions in between seed or may be smooth. The number of seeds per pod varies from one to seven. The seeds may be white, red, brown or mottled in different types and also the size and weight of individual seeds vary considerably. White seeded varieties are prevalent in Gujarat; red and light brown ones are grown all over the Province.

Higher yield, earliness, higher nitrogen content, erect habit of growth, resistance to wilt and to the *tur* pod caterpillar, desirable seed and cotyledon colour are the chief characters to be aimed at in evolving superior types by modern breeding methods.

Research work already done.—Botanical work on this crop has been confined to the Karnatak and has been directed towards obtaining wilt resistant strains.

IV. Udid (Phaseolus mungo Lin. var. Roxb.; Prain).

This crop occupies an area of nearly three lakhs of acres in the Province of Bombay, of which nearly eighty per cent. is grown in the Deccan. It is well-known as a rotational crop, as well as a valuable crop for green manuring.

Yield and uses.—Udid is taken as a mixed or a rotational crop. The average outturn per acre, when grown alone, comes to about 400 to 600 lbs. of grain with about three times that weight of straw. Being a leguminous crop, it enriches the soil in nitrogen on account of the bacterial nodules borne on the roots. It acts as a cover crop in the beginning of rains as it is quick growing and smothers weed by its spread. The seed is parched and eaten. The split grain " dal " is boiled, spiced and eaten. The flour is used in various ways with spices and green seeds are used as vegetables. The grain is parched and ground to make different sorts of spiced balls and is used in preparing thin wafer biscuits called " papads ".

Breeding possibilities.—In a season of good rainfall the *udid* crop is often checked by the luxuriant growth of the principal crop, with which it is grown as a subordinate crop, but when rains are scanty and ill-timed it often contributes the greater portion of the outturn from the field. There are two types, (1) having small green seeds ripening late *i.e.*, nearly four months after sowing, and (2) having large black seeds ripening early, *i.e.*, in seven to eight weeks after sowing. There are wide variations in the habit of growth, duration, morphological characters and yielding capacity. The flowers are self-fertile. Hence pure types can easily be isolated by breeding. The shape, size, colour and number of seeds per pod vary considerably, so also the nitrogen content. High yielding strains, rich in food value are needed by the cultivators.

V. Math (Phaseolus aconitifolius, Jacq).

Math is only second to *udid* in importance as a pulse crop in the Province of Bombay. It is a very hardy crop and forms the most common mixture in millet fields. As a leguminous crop, it enriches poor lands and smothers weeds by its partial trailing and spreading habit. It is an important crop of the poor tracts. More than seventy per cent. of *math* is grown in the Deccan. Gujarat and Karnatak grow it on a smaller scale. In the Deccan, it is grown in all the districts, but Satara claims the highest acreage ; in Gujarat, Kaira and Ahmedabad, it is cultivated on a moderate scale.

Yield and uses.—*Math* is rarely sown alone and is grown as a rain fed crop. In a favourable season, the outturn of *math* is heavy, but, taking into consideration the poverty of the land in which a large proportion of the crop is grown, the highest outturn of grain is 400 to 600 pounds of grain to the acre with about a thousand pounds of fodder. *Math* is used

as a split pulse in different ways and the seed is cooked very commonly as a vegetable. It is ground to flour and used mixed with the flour of other cereals, in making cakes. It is also eaten parched or boiled with condiments. The seed is fed to horses and cattle and is a rich diet while the leaves and stalks form a palatable and nutritive fodder.

Breeding possibilities.—*Math* is a very hardy pulse crop suitable for poorer lands. The crop varies in different economic characters. The flowers are self-fertilized hence there is no difficulty in evolving and maintaining pure, economic types. There is a wide variation in the yielding capacity, time of maturity, drought resistance, habit of growth, colour, shape, size and weight of grain and also in the percentage of useful constituents in the seed. The crop affords good scope for improvement by modern breeding methods. Xerophytic wild types of *math* are commonly met with on the stony hills of the Deccan and the use of such material in breeding is likely to be very valuable. So far no breeding work on this crop has been done in this province.

VI. Mug (Phaseolus radiatus Lin).

Mug is grown to the extent of about two lakhs of acres in the Province of Bombay. *Mug* " dal " is a very common item of diet in Indian cookery, on account of its ease in cooking, fine flavour and taste, and high nutritive value. *Mug* is indigenous to India and is grown in all parts of the country. It is cultivated all over the Province, but the Deccan ranks first with about 50 per cent. of the total crop. Dharwar, East Khandesh and Ahmednagar are the most important districts for the *mug* cultivation.

Yield and uses.—This pulse commands a much higher price in comparison with cereals. It has the reputation of being able to withstand considerable drought and, in a season of scant rainfall when millets have failed, it forms the most valuable source of food, the normally subordinate crop thus becoming of greater importance. It is a cover crop which smothers the weeds by its densely spreading growth. Being a legume, it supplies nitrogen to the soil and its expansive and strong root system aerates the soil and sub-soil. When grown alone, the average outturn per acre comes to about 40 pounds of seed and about three times this weight of very food fodder. Green pods and seeds are used as vegetables and the pulse is boiled with spices and used with rice in daily diet. It is very largely used domestically in the preparation of savouries. The " dal " is a good substitute for *tur* dal for invalids and children on account of its being easily digestible and rich in vitamin B. The flour is made into sweet spiced balls and also cooked into porridge. In the seed there are about 22 per cent. albuminoids and a fairly high percentage of oil. *Mug* contains the highest percentage of phosphoric acid and lime of all the pulses of this Province.

Breeding possibilities.—*Mug* is a drought resistant crop and heavy and continuous rains in September, when the crop is in flower, ruin it. A large variation in the habit of growth, yield, seed characters, and other botanical characters, is exhibited by the crop. Flower clusters of 10 to 20 are borne in axillary or terminal recemes and are fully self-fertile when bagged. Pollen grains are shed in the bud stage, *i.e.*, previous to the opening of the flower. Self-pollination is the invariable rule. The height of the plant varies from 1 to 3 feet and branching may be sparse or profuse. Date of flowering varies from 6 to 10 weeks after sowing. The stem may

be green, purple or splashed and the number of seeds varies from 15 to 19 per pod, as well as the number of pods in a cluster. Seed may be green, yellow or brown and marbled with black patches shining or dull. Green seed is more liked by the public. No breeding work has so far been undertaken in Bombay Province in this crop. Pure types possessing useful economic characters, such as high yielding capacity, green coloured, big sized seed, richness in albuminoids and earliness in flowering and maturity, will have to be isolated. Various wild types can be utilised in breeding useful strains.

STATEMENT B.

[Abstracts of papers published on research work on pulse crops in India.]

1. *Studies in Indian Pulses.*

No. 4 Mug or green gram **(P. radiatus Linn).**

R. D. Bose.

(Ind. Jour. of Agri. Sc. II-6. 607 to 624).

Gives the general history and cultivation of *mug* and its general biology, with special reference to flowering, pollination and cross fertilization. Describes in detail the important botanical characters and variations of plants, flowers, pods and seeds of *mug*. Gives a key to the various types of *mug* and also describes them.

2. *Studies in Indian Pulses.*

No. 5 Udid or Black gram **(P. Mungo Linn. Var. Roxburghii Prain).**

R. D. Bose.

(Ind. Jour. of Agri. Sc. II-6. 625-637).

Gives the general history and cultivation of *udid*. Under the general biology, deals with the flowering, pollination and cross-fertilization of *udid*. Gives the important characters and variations of the vegetative and reproductive parts of the plant. Gives a key to the types of *udid* and describes the types botanically.

3. *Studies in the pollination of Indian crops.*

Howard and Howard and Abdur Rahman Khan.

(Mem. of the Dept. Agri. Ind. X-5).

Pigeon Pea : *Cajanus indicus*. Spreng.

Describes the method of Pollination and fertilization in *tur*. States that natural crossing is common in *tur*. " The method of pure line selection in this crop will be attended by very considerable difficulties and that continuous mass selection by the elimination of unthrifty plants will probably give the best results " is the opinion expressed.

4. ***A note on the pollination of Black and green grams in the Godaveri District.***

M. Narasinham.

(The Agri. Jour. of Ind. Vol. XXIV-6).

Gives the time of the opening of flowers, dehiscence of anthers and pollination ; also deals with the affect of selfing and behaviour of seed

obtained from selfed flowers. Notes the occurrence of cleistogamy up to 46 per cent. in both the grams. States that though the structure of the floral parts in both the grams indicates their suitability for insect pollination, self-pollination appears to be of common occurrence under Godavari conditions. and that pure line selection in these two crops may therefore be a possible line of work.

5. *Some varieties of Indian Gram (Cicer arietinum L.).*

Howard and Howard and A. R. Khan.

(Mem. of the Dept. of Agri. Ind. Vol. VII. No. 6. 1915).

Gives the area and average yield of gram in India and general information about this crop. Describes the flowering pollination and natural cross-fertilization in gram. Gives the classification and description of various types and deals with the two important economical aspects, *viz.*, yield and quality of grain in gram.

6. *The wilt Disease of Pigeon-pea and the parasitism of Neocosmospora vasinfecta smith.*

E. J. Butler.

(Mem. of the Dept. of Agri. Ind. Vol. II-9 Bot. Ser., pp. 1—64).

Gives experiments of different Fungi on pigeon pea. Describes *Neocosmospora vasinfecta* and *Fusarium udum* and suggests a line of treatment in fighting the disease.

7. *" Studies in Indian Pulses " a note on the " kabuli " and " desi " gram types.*

P. D. Dixit.

(Ind. Jour. of Agri. Sc. Vol. II-4, pp. 385—390).

The diploid number of chromosomes in " kabuli " gram is sixteen instead of fourteen, as observed in the ordinary cultivated forms of *Cicer arietinum L.* The haploid number is similarly eight in " kabuli " and seven in the ordinary gram. A mutational origin of the white, large seeded, " kabuli " gram from white small seeded varieties of gram is indicated. From cytological and genetical evidence it is stated that " kabuli " gram may be treated as a distinct species from *C. arietinum* and may be named as *C. Kabulium* in the section *Arietaria* of the genus *Cicer.*

7. *" Studies in Indian Pulses ".*

A case of Gigantism in gram (C. arietinum).

P. D. Dixit.

(Ind. Jour. of Ag. Sc. Vol. II-4, pp. 391—408).

Detailed morphological and cytological studies of this giant mutant in gram indicate that it should be placed as a separate species and may be named as " C. gigas ". New species arise in the genus *Cicer* as the result of cromosomal aberrations.

9. *Some preliminary studies on gram-blight with reference to its cause and mode of perennation.*

J. C. Luthra and K. S. Dedi.

(Ind. Jour. of Agri. Sc. II-5, pp. 499—515).

The gram-blight disease has been found to cause serious damage to the crop in the north Punjab. A fungus isolated from the diseased gram plants has been studied in regard to its morphological and cultural characters. It has also been compared with *Phyllostica rabiei* (Pass) Trotter. Symptoms of the disease as it occurs on branches, leaflets, pods and seeds are described. The local gram-blight fungus and *phyllosticta rabiei* (Pass) Trotter have been found to be identical. Germination studies show that the spores germinate after eight hours in gram seed and leaf extracts. Within 16 hours about 95 per cent. of the pycnospores complete their germination. Inoculation experiments with gram-blight and *P. rabiei* (Pass) Trotter have been made on plants grown in pots. The disease appeared in all the inoculated plants after four days. These experiments establish that *P. rabiei* is a cause of the gram disease in the N. Punjab. Spots of the disease are commonly found on the surface of the seeds. Sections of the tesea and cotyledons have shown hyphæ of the fungus in abundance. Observations and experiments have shown that the disease is seed-borne.

10. "*The Indian Types of Lathyrus sativus L.*".

(Kesari, Lakh, Lang, teora).

G. L. C. Howard and Khan.

(Mem. of the Dept. of Agri. in India, Bot. Ser., XV-2, pp. 51—77).

Gives general information about the crop and its cultivation. Describes its general biology with reference to the root-range, flowering, pollination and crossfertilization. Under classification and description of the types gives description of the types and detailed notes on the botanical characters and their variations. A key to the Indian types and detailed description of the other important types are given.

11. *Studies in Indian Pulses.*

1. Lentil (Ervum lens, Linn.)

Shaw and Bose.

(Memo. of the Dept. of Agri. in Ind., Bot. Ser., Vol. XVI-6, pp. 159—189).

Gives general information about the crops and its cultivation. Root system, flowering, pollination, cross-fertilization, and hybridization in lentil have been described. The classification and description of various types has been given. A key to the Indian types of lentil and their detailed description is given.

12. ***Influence of manures on the wilt-disease of Cajanus indicus Spreng, and the Isolation of types resistant to the Disease.***

W. McRae and F. J. F. Shaw.

(Scientific monograph No. 7, Nov. 1933. The Imp. Coun. of Agri. Research).

PART I.

Influence of superphosphate, cattle manure and green manura on the wilt of Cajanus indicus caused by Fusarium vasinfectum ATK.

The authors observe that with regard to manuring with superphosphate and cattle manure increases the wilt of *Cajanus indicus* caused by *Fusarium vasinfectum* ATK. Green manure (*Crotolaria Juncea*) shows a definite tendency to decrease the wilt. Superphosphate and green manure together increase the wilt. In newly infected land wilt spreads rapidly. Wilt on the farm on a three course rotation and outside Pusa on an irregular rotation causes an average loss of ten per cent. of the plants. Neither moisture nor the hydrogen ion concentration are controlling factors of wilt in the experiments in Pusa soil. Superphosphate increases the root development and the weight of the aerial shoot. Increasing concentration of phosphate increases the growth of the fungus up to a certain point after which further increase checks growth. The casual fungus is carried in the soil from crop to crop mostly in dead roots below the depth of cultivation, to small extent by dead roots in the ploughed soil and to a still less extent on the seed. Type 80 has high degree of resistance.

PART II.

The Isolation of Resistant types.

The method of selection of wilt-resistant type and the field trials are described. Type 80 is highly resistant to wilt disease. Types 16, 41, 50, 51 and 82 are also resistant to the disease. Resistance cannot be correlated with the morphological characters studied. A resistant *rahar* if grown in a field which has been under *rahar* for three or more seasons loses its resistance.

13. *Studies in Indian Pulses.*

(3) The Types of Cajanus indicus Spreng.

F. J. F. SHAW, A. R. KHAN AND HUKUM SINGH.

(Ind. J. Agri. Sci. III-1).

Eighty-six types of pigeon pea (*rahar*) isolated at Pusa from seed samples collected from different places in India have been classified and described. The types vary in the colour of seed, pod, flower and stem and in the habit of growth, maturity, plant height, etc. First importance in the classification of the types has been given to the characters of flowers, seeds, and pod. Variations in all the above characters are described. Origin of the types and a chemical analysis of seed of some of the types have been given.

14. *A note on the Inheritance of seed-coat colour in Phaseolus lunatus L.*

D. RHIND.

(Ind. J. Agric. Sci. 3, 358).

A gene R. for rose colour in the seed-coat is described and a complementary gene P. which alone is inactive but which with R. produces purple colour. Both these characters are effected by the factor S. for speckling which breaks up the rose and purple colours, exposing a buff ground colour,

the degree of exposure depending on whether S. is homozygous or not. The presence of these three genes leads to the unusual di-and trihybrid ratios which are recorded.

15. *The Inheritance of Petal colour in Gram (C. arietinum L.).*

A. R. Khan and A. R. Akhtar.

(Agric. and Live Stock in Ind. IV-2-1934. pp. 127—155).

The results of five crosses between Pusa types of gram are described. The flower colour of gram depends upon the interaction of several factors. Blue colour depends upon a single factor B. and ink colour is produced by a factor P. in the presence of B. In the absence of B. the flower is white whether P. is present or absent. Greenness in the standard is developed in the absence of a factor W. Greenness is therefore recessive to non-green. Singleness depends upon a factor S. and is dominant to doubleness.

16. *Studies in Indian Pulses.*

No. 6—The Root systems of Green and Black Grams.

R. D. Bose, and R. G. Joglekar.

(Ind. Jour. Agric. Sci. 3, 1045).

The root systems of forty types of *mug* or green (Phaseolus radiatus Linn) and twenty-five types of *udid* or black gram (Phaseolus Mungo L. var-Robburghii Prain) isolated at Pusa have been studied and their relationship with some other characters determined. The popular method of rootwashing with the help of a Knapsack sprayer was used. The root systems in both the crops have been classified into mesophytic and xerophytic classes and very useful observations are recorded.

17. *Inheritance of characters in Cajanus indicus.*

B. B. Dave.

(Ind. J. Agric. Sci. 4, 674).

The inheritance of flower, pod and seed-coat colour in *Cajanus indicus* has been described. The different generations of various crosses have been studied and ratios worked out for different botanical characters. Linkage between characters is also given.

18. *Studies in Cercospora indica, n. sp. parasitic on Cajanus indicus Spring.*

N. B. Singh.

(Ind. J. Agric. Sci. 4, 343).

A study of the morphology and parasitism of two strains of a species of *Cercospora*, one isolated from Allahabad (CA), and the other from Pusa (CP) was made under various conditions of artificial growth and it was observed that this fungus which causes a leaf-spot disease of *Cajanus indicus* is a new species hitherto undescribed. A full diagnosis is given and the name *Cercospora indica*, n. sp. is proposed.

19. *Studies in the Development of the Female Gametophyte in some Leguminous crop plants of India.*

B. Roy.

(Ind. J. Agric. Sci. 3, 1098).

The development of the female Gametophyte has been studied in *Pachyrhizu angulatus* Rich., *Cajanus indicus* Spring, *Dolichos Lablab* Linn., *Pisum sativum* Linn., and *Lathyrus sativas* Linn. The haploid number of chromosomes in *Pachyrhizus* and *Cajanus* is eleven, in *Pisum* and *Lathyrus* it is seven.

20. *Life-history of Gram Blight.*

Ascochyta rabiei (Pass) Lab.—*Phyllosticta rabiei* (Pass) Trot. on gram (*Cicer arietinum* L) and its control in the Punjab.

J. C. Luthra, A. Sattar and K. S. Bedi.

(Agri. and Live Stock in Ind. V-5-489—498).

The blight disease of gram is very serious in Attok and Jhelum districts of the Punjab. The symptoms of the disease and the fungus *Ascochyta rabiei* (Pass) Lab-*Phyllosticta rabiei* (Pass) Trot, have been described. Factors affecting the spread and development of the disease are described and effective measures for the control of the disease are recommended.

21. *A comparative Study of the Fungi associated with blight diseases of certain cultivated Leguminous plants.*

A. Sattar

(Trans. of British Nycol. Soc. Vol. XVIII, Part IV, April 1934).

Nine fungi causing blight or foot-rot diseases of pea, gram, lentil, and vetch (*visia sativa*) have been studied. The symptoms of the disease and the nature of injury caused, as observed on naturally or artificially infected plants have been described. A comparative study of the various fungi has been made. Inoculation experiments by three different methods under glass house and field conditions have been carried out. A discussion of the experimental results in relation to the taxonomy of the various forms is given and useful conclusions are drawn.

22. *Gram-wilts in the Central Provinces.*

J. F. Dastur.

(Agric. and Live Stock in Ind. V. 6, pp. 615—627).

States that there are two kinds of wilts, one is considered to be due to physiological soil-conditions and other is caused by *Rhizoctonia bataticola* (Tamb.) Butl. Deals with both the kinds of wilts in detail.

23. *Influence of temperature and maturity on the incidence of Sann hemp and Pigeon pea wilt at Pusa.*

B. B. Mundkur.

(Ind. J. Agric. Sci. 5, 609).

Wilt in Sann hemp and pigeon pea is caused at Pusa by *Fussarium vasinfectum* ATK. Weekly records of deaths in the two crops indicated that high soil temperatures 28-33°C, favoured the disease in Sann hemp

and low soil temperature, 17-29°C, favoured the disease in pigeon pea. It became apparent that Sann hemp plants became resistant as they matured while the pigeon pea plants became increasingly liable to attack by the fungus as they matured. There is a combined influence of soil temperature and maturity on the disease.

24. *The Inheritance of seed characters in Gram* (***Cicer arietinum L.***).

H. SINGH, AND R. S. EKBOTE.

(Ind. J. Agric. Sci. 6, 1087).

The inheritance of colour, shape, and surface of gram seeds has been studied in the cross between the Pusa gram types 11, 12, 21 and 52. Cases of perfect linkage between characters has been described. The inheritance of the seed characters has been interpreted on the assumption of factors and the factorial constitution of each of the parental types has been given.

25. *A new variety of Oidiopsis taurica.*

B. N. UPPAL, M. N. KAMAT AND M. K. PATEL.

(Ind. J. Agric. Sci. 6, 110).

The fungus causing powdery mildew on *Dolichos lablab* has been described as a new variety of *Oidiopsis taurica*, from which it differs by the large size of its conidia. The name proposed for the *Dolichos* fungus is *Oidiopsis taurica* var. *macrospora*. The fungus produces dull red spots on the upper surface of the leaves of *Dolichos lablab*, the corresponding areas on the lower surface supporting white mealy fungus growth.

APPENDIX LIII.

Note on Subject No. 21 (a) :—Mixed Farming Schemes in :—(i) The United Provinces, (ii) The North-West Frontier Province, (iii) Orissa, (iv) Sind.

In their reports on the work of the Imperial Council of Agricultural Research, both Sir John Russell and Dr. N. C. Wright have referred to the value of a system of mixed farming to the development of Indian agriculture and made the following recommendations :—

(i) *Sir John Russell (page 218, paragraph 1 of the Report)*.—" The more intimate fusion of agriculture and livestock husbandry is one of the most hopeful ways of improving Indian agriculture."

Dr. N. C. Wright (Recommendation 32, page of Report).—" The value of cattle as a means of raising the fertility of the soil cannot be readily computed. One estimate places the cash value of cattle manure at 270 crores of rupees. There is no doubt that the widespread adoption of ' Composting ' would greatly enhance the value of this manure. But the potential value of cattle as a means of introducing a ' mixed farming ' system in India, and thus of improving crop yields, is incalculable. In any such system of " mixed farming " the introduction of leguminous fodder crops would still further increase soil fertility, while the improvement in crop yields should offset any apparent increase in the cost of milk production."

The Advisory Board endorsed these recommendations in November 1937. The matter was considered further at the meeting of the Joint Committee of the Advisory Board and the Governing Body in July 1938 and the Committee recommended that small grants should be made by the Council towards the cost of trained assistants and other irrecoverable expenses. The Governing Body accepted this recommendation in July 1938.

2. The subject being primarily provincial, the recommendations were brought to the notice of the Provincial Governments and the Constituent Indian States of the Council for such action as they considered necessary, adding that the question of making small grants as recommended by the Council would be considered on receipt of concrete proposals.

3. Schemes for experiments in mixed farming have accordingly been received from the United Provinces (Annexure I), North-West Frontier Province (Annexure II), Orissa (Annexure III) and Sind (Annexure IV).

The following is a brief statement of the proposals contained in these :—

Province.	Brief outline (*Scope & staff*).	Total cost. Rs.	Share of ICAR. Rs.	Share of Govt. Rs.
United Provinces	For mixed farming only—12 plots R. (4-8 acre, 4-16 acre and 4-24 acre NR. plots) and for ordinary farming (Control) a like number of plots.	2,23,597/8 41,616	2,13,997/8 30,816	9,600 10,800
		2,65,213/8	2,44,813/8	20,400

R.—Recurring. R. N.—Non- recurring.

Province.	Brief outline (*Scope & Staff.*)	Total cost. Rs.	Share of ICAR. Rs.	Share of Govt. Rs.
	Staff—Survisory—1 Senior Inspector, 4 Inspectors and 24 Supervisors and Travelling allowance, Rent of office, cost of live-stock, deadstock and buildings and cropping expenses.	5 years	..	..
	Provincial Government's share— Only for buildings and rent of land.			
North West Frontier Province.	6 holdings of about 20 acres each—2 for milk production, 2 for sheep breeding and 2 for both sheep and milch cattle.			
	Staff.—One Agricultural Assistant, 6 Kamdars and travelling allowance.	15,546 3 years.	9,996	5,550*
	Provincial Government's share— *Rs. 5,550 in addition to clerical and laboratory help.			
Orissa ..	One farm with 1 graduate Overseer (2nd grade), one Sardar and cattle (50 : 50 contribution).	8,640 4 years.	4,320	4,320
Sind	4 Farms with no staff and provision R. only for cultivation, hay storage and miscellaneous expenses (50 : 50 contribution).	25,000 p. a.	12,500 p.a.	12,500 p. a.
		12,400	..	12,400

R.—Recurring. N R.—Non-recurring.

Full details are given in the respective schemes which are now for consideration. These will be examined first by the Central Fodder and Grazing Committee whose report will be submitted to the Advisory Board in due course.

4. Any further schemes, if received in time, will be submitted separately.

ANNEXURE I.

AN APPLICATION FROM THE UNITED PROVINCES GOVERNMENT TO THE IMPERIAL COUNCIL OF AGRICULTURAL RESEARCH, FOR A GRANT OF Rs. 2,65,213-8-0 SPREAD OVER FIVE YEARS FOR A SCHEME OF MIXED FARMING IN THE UNITED PROVINCES.

INTRODUCTORY.

In accordance with the wishes of the Imperial Council of Agricultural Research, as conveyed in their letter No. F. 18|40|38-A, dated November 17, 1938, a provincial scheme embodying research into the possibilities of mixed farming is submitted. The object of the scheme is to compare mixed farming under controlled conditions against the ordinary agricultural practice of four different tracts in the United Provinces. This object is in fact indicated in the reports of Dr. Wright and Sir John Russell. Sir John Russell's recommendation was considered by a special

sub-committee of the Imperial Council of Agricultural Research on development activities in March, 1938. The resolution of the Committee on mixed farming was as follows :—

"The Committee agreed that in the event of the Council getting a special grant from the Government of India for development work, the Council should, except in certain areas where mixed farming was already an established practice like the Punjab and Bihar, stimulate experimental work on mixed farming in order to raise the standard of soil fertility and crop production. The possibility of using fertilizers in addition to cattle manure in such experiments should also be taken into account. In some cases it may be necessary to extend the experimental work to a village or part of the village and not keep it limited to a single holding."

The Western districts have been excluded in this investigation since mixed farming is generally practised here and conditions are similar to those in the Punjab.

SCHEME.

The four tracts selected for the scheme are :—

(1) Eastern	..	.. Fyzabad.
(2) Central	..	.. Cawnpore.
(3) Bundelkhand	..	.. Jhansi.
(4) Baghelkhand	..	.. Mirzapur.

In each of these tracts, it is proposed to have replicated units of 8, 16 and 24 acres respectively. The 8-acre unit is selected as representing the most economic unit for one pair of bullocks and in the mixed farming scheme such a unit will hold three milch buffaloes. The mixed farming programme will follow a rotation of crops to include, in particular, leguminous fodders such as *gour* in the *kharif* and berseem in the *rabi*. The increased manurial supplies available as a result of maintaining three buffaloes per unit of 8 acres, 6 for 16 acres and 9 for 24 acres will permit of a higher intensity of cultivation on the mixed farming units resulting in increased potential cash returns to the cultivator. In each of these tracts, land either on a Govenrment farm or on a private holding is available for conducting the experiment. Facilities for irrigation and marketing of whole milk and milk products which are necessary for the success of mixed farming are also present.

In order to keep a detailed record of the operations and results of experiments it is necessary that adequate provision for supervising staff should be made. Thus the units will cosnist of the following :—

(1) Four 8-acre units in four tracts for mixed farming.

(2) Four 8-acre units of agriculture as ordinarily practised.

(3) Four 16-acre units in four tracts for mixed farming.

(4) Four 16-acre units of agriculture as ordinarily practised.

(5) Four 24-acre units in four tracts for mixed farming.

(6) Four 24-acre units of agriculture as ordinarily practised.

Total units 24.

It is proposed to appoint an agricultural supervisor for each unit and an agricultural inspector of Group II S. A. S. for each group of units. The work of these tracts will be co-ordinated and controlled by a Senior

Agricultural Inspector in Group I of the S. A. S. under the direct supervision of the Director of Agriculture with headquarters at Lucknow. One clerk of the grade Rs. 25—1½—34 will be required for each Inspector of a group of units and one clerk of the grade Rs. 35—1½—44 and a peon will be required for the Senior Agricultural Inspector at headquarters.

Financial requirements.

		Rs.	A.
(a) *For cropping schemes as per statement attached*—			
Non-recurring	..	40,216	0
Recurring	..	1,41,905	8
Total	..	1,82,121	8
(b) Supervising staff—			
Non-recurring	..	1,400	0
Recurring	..	81,692	0
Total	..	83,092	0
GRAND TOTAL—			
Non-recurring	..	41,616	0
Recurring	..	2,23,597	8
Total	..	2,65,213	8

Summary showing contributions of the Imperial Council of Agricultural Research and the United Provinces Government respectively.

	Non-recurring.		Recurring.		Total.	
	Rs.	A.	Rs.	A.	Rs.	A.
Provincial Government	10,800	0	9,600	0	20,400	0
Imperial Council of Agricultural Research ..	29,416	0	2,15,397	8	2,44,813	8
					2,65,213	8

Statement of expenditure on experiments of mixed farming to be met by the Provincial Government and the Imperial Council of Agricultural Research.

Name of the item.	Non-recurring.		Total.	Recurring.			Total.		Grand Total.	
	Share of the Provincial Government.	Share of the Imperial Council of Agricultural Research.		Share of the Provincial Government.	Share of the Imperial Council of Agricultural Research.					
	Rs.	Rs.	Rs.	Rs.	Rs.	A.	Rs.	A.	Rs.	A.
1. Mixed farming ..	7,200	22,216	29,416	9,600	1,00,265	8	1,09,865	8	1,39,281	8
2. Ordinary farming ..	3,600	7,200	10,800	..	32,040	0	32,040	0	42,840	0
3. Pay of the staff ..	..	..	..	..	83,092	0	83,092	0	83,092	0
GRAND TOTAL ..	10,800	29,416	40,216	9,600	2,15,397	8	2,24,997	8	2,65,213	8

N.B.—The supervision charges will be borne by the Provincial Government.

APPENDIX I.

Details of items to be met by the Provincial Government.

	Non-recurring. Rs.		Recurring. Rs.
1. Ordinary farming—			
8-acre plot buildings	200		
16 Ditto ..	300		
24 Ditto ..	400		
	900 × 4 = 3,600		
2. Mixed farming—			
8-acre plot buildings	400	Rent of the land	80
16 Ditto ..	600	Ditto ..	160
24 Ditto ..	800	Ditto ..	240
	1,800 × 4 = 7,000		480 × 4 = 1,920 × 5 = 9,600

N.B.—No land rent has been given under the ordinary farming but the expenses have been included in the expenditure as a whole.

APPENDIX II.

Statement of requirement of staff for the mixed farming experiments to be carried out in the United Provinces.

Serial No.	Name of item.	1st year.	2nd year.	3rd year.	4th year.	5th year.	Total.	Remarks.
		Rs.	Rs.	Rs.	Rs.	Rs.	Rs.	
	Non-recurring.							
1	Furniture for the supervisors, Agricultural Inspectors and Senior Agricultural Inspectors—Rs. 1,000.	1,400	..	..	..	..	1,400	
2	Typewriter for the Senior Agricultural Inspector—Rs. 400.							
	Recurring.							
1	24 Supervisors at Rs. 30 in the grade of Rs. 30—1—40.	7,920	8,928	9,216	9,604	9,792	45,360	
2	4 Inspectors at Rs. 80 in the grade of Rs. 80—5—150.	3,520	4,080	4,320	4,560	4,800	21,280	
3	1 Senior Agricultural Inspector at Rs. 150 in the grade of Rs. 150—10—220.	1,650	1,920	2,040	2,160	2,280	10,050	
4	1 Peon at Rs. 12 in the grade of Rs. 10—½/2—14 + 2 allowance.	132	144	150	150	156	732	
5	Travelling allowance ..	500	500	500	500	500	2,500	
6	Office rent at Rs. 30 per mensem for the Senior Agricultural Inspector.	330	360	360	360	360	1,770	
	Total ..	14,052	15,932	16,580	17,234	17,888	81,692	
	GRAND TOTAL—							
	Non-recurring ..	..	..	..	..	..	1,400	
	Recurring ..	..	..	..	..	..	81,692	
							83,092	

APPENDIX III.

Statement of requirement of funds for mixed farming and ordinary farming experiments to be carried out in the United Provinces for five years.

			Rs.	A.	
(a) Mixed farming ..	.. Non-recurring	..	29,416	0	*Vide* Appendix IV.
	Recurring	..	1,09,865	8	
	Total	..	1,39,281	8	
(b) Ordinary farming	.. Non-recurring	..	10,800	0	
	Recurring	..	32,040	0	*Vide* Appendix VIII.
	Total	..	42,840	0	
GRAND TOTAL	Non-recurring	..	40,216	0	
	Recurring	..	1,41,905	8	
			1,82,121	8	
Estimated *income for five years*—					
(a) Mixed farming ..	..	.. ..	30,576	4	
(b) *Ordinary farming*	..	.. ..	11,220	0	
	Total	..	41,796	4	

APPENDIX IV.

Statement of requirement of funds for mixed farming experiments in the United Provinces for five years.

			Rs.	A.	Rs.	A.	
1. Non-recurring four 8-acre plots	..	..	5,356	0			
Recurring for five years for four 8-acre plot		..	21,152	8			
	Total	..	26,508	8	26,508	8	*Vide* Appendix V.
2. Non-recurring four 16-acre plots	..	..	9,912	0			
Recurring four 16-acre plots ..	..	..	41,600	0			
	Total	..	51,512	0	51,512	0	*Vide* Appendix VI.
3. Non-recurring four 24-acre plots	...	..	14,148	0			
Recurring four 24-acre plots ..	..	..	47,113	0			
	Total	..	61,261	0	61,261	0	*Vide* Appendix VIII.
	Total	..	..		1,39,281	8	
Non-recurring	..	..	29,416	0			
Recurring	..	..	1,09,865	8			
	Total	..	1,39,281	8			

APPENDIX V.

8-acre plots mixed farming.

Serial No.	Name of item.	1st year.	2nd year.	3rd year.	4th year.	5th year.	Total.	Remarks.
		Rs.	Rs.	Rs.	Rs.	Rs.	Rs.	
	Non-recurring.							
1	Live stock	800	..	..	..	..	800	
2	Dead stock	139	..	..	..	..	139	
3	Buildings	400	..	..	..	..	400	
	Total ..	1,339	..	..	..	..	1,339	
	Recurring.							
		Rs. A.	Rs. A.	Rs. A.	Rs. A.	Rs. A.	Rs. A.	
	Expenses for cropping as per scheme (*vide* Appendix VII).	1,113 10	1,043 10	1,043 10	1,048 10	1,043 10	5,288 2	

Total:

		Rs.	A.
Non-recurring	..	1,339	0
Recurring	..	5,288	2

Non-recurring .. Rs. 1,339-0 × 4 = 5,356-0

Recurring .. Rs. 5,288-2 × 4 = 21,152-8

GRAND TOTAL .. 26,508-8

Income.

	Rs.	A.	
1. Income from crops	537	8	(*Vide* Appendix XII.)
2. Income from milk	730	0	
3. Income from young calves	50	0	
Total ..	1,317	8	
Deduct expenditure	1,113	10	
	203	14	for 1 unit × 4 = 815·8 × 5 = 4,077-8—Net profit during five years.

The income will increase by Rs. 70 yearly after the first year.

APPENDIX VI.

16-acre plots mixed farming.

Serial No.	Name of item.		1st year.	2nd year.	3rd year.	4th year.	5th year.	Total year.	Remarks.
		Rs.	Rs.	Rs.	Rs.	Rs.	Rs.	Rs.	
	Non-recurring.								
1	Live stock ..	1,600	..	..	..	..	..	..	
2	Dead Stock ..	278	..	..	..	..	..	..	
3	Buildings ..	600	2,478	..	..	..	..	2,478	
		2,478							
	Recurring.								
1	Expenses for cropping as per scheme (*vide* Appendix XII).	..	2,192	2,152	2,052	2,052	2,052	10,400	

Total :

		Rs.	Rs.
Non-recurring ..	..	2,478×4 =	9,912
Recurring ..	..	10,400×4 =	41,600
GRAND TOTAL	..		51,512

Income.

	Rs. A.	Rs.
1. Income	1,317-8-0×	2,635
Deduct expenditure ..	.. ..	2,192

443 × 4 = 1,772×5 = 8,860 Net profit during five years.

The income will increase by Rs. 140 yearly after the first year.

APPENDIX VII.

24-acre plots mixed farming.

Serial No.	Name of item.		1st year.	2nd year.	3rd year.	4th year.	5th year.	Total.	Remarks.
	Non-recurring.	Rs.	Rs.	Rs.	Rs.	Rs.	Rs.	Rs.	
1	Live stock ..	2,400	..	..	..	..	..	..	
2	Dead stock ..	373	..	..	..	..	..	..	
3	Buildings ..	800	..	..	..	..	..	..	
		3,537	3,537	..	..	..	..	3,537	
	Recurring.								
1	Expenses and cropping as per scheme (*vide* Appendix XII).		3,154 9	2,944 9	2,944 9	2,944 9	2,944 9	11,778 4	

Total :

		Rs.	Rs.
Non-recurring	..	3,537 × 4 =	14,148
Recurring	..	11,778-4 × 4 =	47,113
GRAND TOTAL ..	..		61,261

Income.

	Rs. A.	Rs. A.
1 Income	1,317-8 × 3 =	3,952-8
Deduct expenditure ..	..	3,154-9

797-15 × 4 = 3,191-12 × 5 = 15,958-12. Net profit during five years.

The income will increase by Rs. 210 yearly after the first year.

APPENDIX VIII.

Statement of requirements of funds for ordinary farming controlled plots for statistical comparison with mixed farming for five years.

				Rs.	
1. Non-recurring	..	4	8-acre plots	2,000	
Recurring ..	..	4	8-acre plots	5,340	
				7,340	7,340 (*Vide* Appendix IX.)
2. Nonrecurring	..	4	16-acre plots	3,600	
Recurring ..	..	4	16-acre plots	10,680	
				14,280	14,280 (*Vide* Appendix X.)
3. Non-recurring	..	4	24-acre plots	5,300	
Recurring ..	..	4	24-acre plots	16,020	
				21,220	21,220 (*Vide* Appendix XI).
					42,840
			(1) Non-recurring ..	10,800	
			(2) Recurring.. ..	32,040	
			Total ..	42,840	

APPENDIX IX.

8-acre plot ordinary farming.

Serial No.	Name of item.		1st year.	2nd year.	3rd year.	4th year.	5th year.	Total.
	Non-recurring.	Rs.	Rs.	Rs.	Rs.	Rs.	Rs.	Rs.
1	Live stock	200	..	..	..	..	..	..
2	Dead stock	100	..	..	..	..	..	..
3	Buildings	200	..	..	..	..	..	..
		500	500	..	..	..	..	500
	Recurring.							
1	Expenses for cropping as per scheme (*vide* Appendix XIII).	267	267	267	267	267	267	1,335

Total:

		Rs.			Rs.
Non-recurring ..	..	500	× 4	=	2,000
Recurring ..	..	1,335	× 4	=	5,340
GRAND TOTAL				..	7,340

Income.

	Rs. A.		
1 Income	360 8	} *Vide* Appendix XIII.	
Deduct expenditure ..	267 0		
Balance	93 8	× 4 = 374 × 5 = 1,870.	Net profit during five years.

APPENDIX X.

16-acre plot ordinary farming.

Serial No.	Name of item.		1st year.	2nd year.	3rd year.	4th year.	5th year.	Total.
		Rs.	Rs.	Rs.	Rs.	Rs.	Rs.	Rs.
	Non-recurring.							
1	Live stock	400	..	..	..	..	..	..
2	Dead stock	200	..	..	..	..	..	..
3	Buildings	300	..	..	..	..	..	..
	Total ..	900	900	..	..	..	..	900
	Recurring.							
1	Expenses for cropping as per scheme Rs. 257 × 2 = 534 (*vide* Appendix XIII).		534	534	534	534	534	2,670

Total:

		Rs.		Rs.
Non-recurring	..	900 × 4	=	3,600
Recurring	..	2,670 × 4	=	10,680
GRAND TOTAL	..			14,280

Income.

		Rs.		Rs.	
1	Income	360-8 × 2	=	721	*Vide* Appendix XIII.
	Deduct expenditure ..			534	
	Total ..			187 × 4 = 748 × 5 = 3,740.	Net profit during five years.

APPENDIX XI.

24-acre plot ordinary farming.

Serial No.	Name of item.		1st year.	2nd year.	3rd year.	4th year.	5th year.	Total.
		Rs.	Rs.	Rs.	Rs.	Rs.	Rs.	Rs.
	Non-recurring.							
1	Live stock	600	..	..	..	..	..	..
2	Dead stock	300	..	..	..	..	..	..
3	Buildings	500	..	..	..	..	..	..
	Total ..	1,300	1,300	..	..	..	..	1,300
	Recurring.							
1	Expenses for cropping as per scheme (*vide* Appendix XIII) 267 × 3 = 801.		801	801	801	801	801	4,005

Total:

		Rs.		Rs.
Non-recurring	..	1,300 × 4	=	5,200
Recurring	..	4,005 × 4	=	16,020
GRAND TOTAL	..			21,220

Income.

		Rs. A.		Rs. A.	
1	Income	360-8 × 3	=	1,081-8	*Vide* Appendix XIII.
	Deduct expenditure ..			801-0	
				280-8 × 4 = 1,122 × 5 = 5,610.	Net profit during five year.

APPENDIX XII.

Model mixed farming unit of 8 acres.

Strength of cattle.—One pair of bullocks and three milch buffaloes.

Cropping Scheme.

Area.	First year.		Second year.		Third year.	
	Kharif.	*Rabi.*	*Kharif.*	*Rabi.*	*Kharif.*	*Rabi.*
2 acres	Cowpeas and *moth.*	..	Sugarcane.	..	Early maize and *moth.*	Wheat.
2 „	Sugarcane.	..	Early maize and *moth.*	Wheat ..	Cowpeas and *moth.*	..
2 „	Early maize and *moth.*	Wheat ..	Cowpeas and *moth.*	..	Sugarcane.	..
½ acre	*Juar* and *gaur chari.*	Gram ..	G. manuring.	Wheat ..	Early maize and *moth.*	Berseem.
½ „	G. manuring.	Wheat ..	Early maize and *moth.*	Berseem.	*Chari* ..	Gram.
½ „	Early maize and *moth.*	Berseem.	*Chari* ..	Gram ..	G. manuring.	Wheat.
½ „	Lucerne and Napier, perennial fodder.					

Abstract of area under each crop.

Kharif.	Acres.	*Rabi.*	Acres.
(1) Sugarcane	2	(1) Wheat	2½
(2) Early maize and *moth*	2½	(2) Gram	½
(3) Cowpeas and *moth*	2	(3) Berseem	½
(4) *Juar* and *guar chari*	½		
(5) *Sanai* for green manuring ..	½		
Total ..	7½	Total ..	3½

Perennial fodder crops Lucerne and Napier ½ acres.

Supply of green and dry fodder made available by the Cropping Scheme.

Crop.	Area in acres.	Outturn expected per acre.	Total quantity available.	
			Green.	Dry.
		Mds.	Mds.	Mds.
(1) Cowpease and *moth*	2	220	400	..
(2) Maize and *moth*	2½	300	750	..
(3) *Juar* and *guar chari*	½	400	200	..
(4) Berseem	½	300	150	..
(5) Lucerne and Napier	½	600	300	..
(6) Wheat	2½	40	..	100
(7) Gram	½	10	..	5
Total ..			1,800	105

These quantities when converted in terms of dry fodder, will appear as under :

1,800 maunds of green fodder $\frac{1,800}{4}$ = 450 maunds.

Total, fodder in terms of dry quantity :

450 maunds + 105 = 550 maunds.

Actual requirements of fodder for drought cattle and milch cattle.

Five cattle at 10 seers per head 5× 10 ×365 = 456 maunds.

The total quantity of available fodder comes to 555 maunds and the requirement of cattle comes to 456 maunds. There is therefore no shortage of fodder under the above scheme.

Non-recurring expenditure.

	Rs.	A.	P.
(1) *Live stock*—			
One pair of bullocks at Rs. 200	200	0	0
Three milch buffaloes at Rs. 200	600	0	0
	800	0	0
(2) *Dead stock*—			
(*i*) Watts plough, one	18	0	0
(*ii*) *Desi* plough, one	3	0	0
(*iii*) Akola hoe, one	5	0	0
(*iv*) *Pata* hoe, one	3	0	0
(*v*) Bullock cart, one	80	0	0
(*vi*) Miscellaneous	30	0	0
	139	0	0
(3) *Buildings*—			
One *kachcha* shed for cattle	200	0	0
One *kachacha* house fot the tenant	200	0	0
* Total capital expenditure ..	1,339	0	0

Recurring expenditure.

	Rs.	A.	P.
(1) *Rent*—			
Eight acres at Rs. 10 per acre	80	0	0
(2) *Cost of seed*—			
2 acres cane 80 maunds at annas 5	225	0	0
5 acres *kharif* fodder 2½ maunds at Rs. 2-8-0	6	4	0
2½ acres wheat 3¼ maunds at Rs. 3	9	12	0
½ acre gram, 16 seers at Rs. 2-8-	1	0	0
½ acre Berseem, 5 seers at Re. 1	5	0	0
½ acre *Sanai* seed, 25 seers at Rs. 2-8-0	1	9	0
½ acre Lucerne and Napier	7	8	0
	56	0	0
(3) *Irrigation charges*—			
2 acres cane at Rs. 10	20	0	0
5 acres fodder at Rs. 3	15	0	0
2½ acres wheat at Rs. 5	12	8	0
½ acre Berseem at Rs. 5	2	8	0
½ acre Lucerne and Napier at Rs. 6	3	0	0
½ acre *Sanai* at Rs. 1-14-0	0	10	0
	53	1	0
(4) *Manure*—			
Except for two acres cane, the area will be manured from the tenants' own stock stock, 2 acres cane at 15 maunds castor cake per acre, 30 maunds at Rs. 1-4-0 per maund	37	8	0
(5) *Labour*—			
Two lanourers at Rs. 10 (2 × 10 × 12)	240	0	0
(6) *Food and Fodder*—			
Fodder will be grown on the holdings ; only concentrates will be purchased, Five cattle at 3 seers average per head 3 × 5 × 365 = 137 maunds at Rs. 2-8 per maund	342	8	0
(7) *Interest on capital investment*—			
At 7½ per cent. on Rs. 1,337	100	0	0
(8) *Depreciation on veapital stock*—			
At 10 per cent. on Rs. 1,339	134	0	0
Total, recurring expenditure ..	1,043	11	0

	Rs.	A.	P.
To this, in the first year, will be added the cost of fodder for 3 months. $5 \times 10 \times 90 = 112$ maunds of *bhoosa*	70	0	0
Cost of 112 maunds of *bhoosa* at annas 10 per maund	70	0	0

Therefore the total expenditure in the first year, will be :

Rs. 1,043-11 *plus* Rs. 7=Rs. 1,113-11-0.

Income from the 8-acre mixed farming unit—

	Rs.	A.	P.
2 acres canes at 600 maunds per acre, 1,200 maunds at annas 5 ..	375	0	0
2½ acres wheat 20 maunds per acre. 50 maunds at Rs. 3	150	0	0
½ acre gram 10 maunds per acre, 5 maunds at Rs. 2-8-0	12	0	0
Total income from crop	537	8	0

Price of milk.—Out of 3 milch buffaloes, 2 will be in milk.

	Rs.	A.	P.
2 at 8 seers average per head $2 \times 8 \times 365 = 5{,}840$ seers at 8 seers a rupee ..	730	0	0
Price of 2 young calves at Rs. 25 each	50	0	0
Total income ..	1,317	8	0

Profit—

	Rs.	A.	P.
Income	1,317	8	0
Expenditure	1,113	11	0
Profit ..	203	13	0

NOTE.—In the first year the probable profit will be Rs. 203-13, but in subsequent years it should be Rs. 273-13, as no fodder will be purchased.

Model mixed farming unit of 16-acres.

Strength of cattle—

2 pairs of bullocks.

6 milch buffaloes.

Cropping scheme.—The cropping scheme will be the same as in case of the 8-acre holding, but the area under each crop will be doubled.

Non-recurring expenditure.

Expenditure under each item will be double of the 8-acre unit, except that the expenditure under housing will be the same.

	Rs.	A.	P.
(*i*) 2 pairs of bullocks	400	0	0
(*ii*) 6 milch buffaloes	1,200	0	0
(*iii*) Dead stock	278	0	0
(*iv*) Shed for cattle	400	0	0
(*v*) House for the tenant	200	0	0
Total ..	2,478	0	0

Recurring expenditure.

	Rs.	A.	P.
(1) Rent	160	0	0
(2) Cost of seed	112	0	0
(3) Labour	480	0	0
(4) Concentrates	686	0	0
(5) Manure	75	0	0
(6) Irrigarion	107	6	0
(7) Interest on capital investment	185	0	0
(8) Depreciation on capital stock	248	0	0
Total ..	2,050	6	0
Add—Cost of fodder for 3 months in the first year	140	0	0
	2,192	6	0
Income Rs. 1,317-8×2	2,635	0	0
Expenditure	2,192	6	0
Profit ..	442	10	0
The profit in the first year	442	10	0
The profit in subsequent years	582	10	0

Model Mixed Farming Unit of 24-acres.

Strength of Cattle.

Three pairs of bullocks.

Nine milch buffaloes.

Cropping Scheme—

The Cropping Scheme will be the same but the area under each crop will be three times that under the eight-acres unit.

Non-recurring expenditure.

Expenditure under each item will be three times that of the eight-acres unit except in the case of dead stock and housing.

	Rs.
(*i*) Three pairs of bullock	600
(*ii*) Nine milch cattle	1,800
(*iii*) Dead stock	337
(*iv*) Shed for cattle	600
(*v*) House	200
Total ..	3,537

Recurring expenditure.

		Rs.	A.	P.
(1) Rent ..	..	240	0	0
(2) Cost of seed ..	..	168	3	0
(3) Labour ..	..	600	0	0
(4) Concentrate ..	..	1,027	8	0
(5) Manure ..	..	112	8	0
(6) Irrigation ..	..	160	14	0
(7) Interest on capital investment ..	..	271	8	0
(8) Depreciation on capital stock ..	..	364	0	0
Total	..	2,944	9	0
Add—Cost of fodder for three months in the first year ..	..	210	0	0
Total	..	3,154	9	0
Income Rs. 1,317	8×3	3,952	8	0
Expenditure	..	3,154	9	0
Profit in the first year	..	797	15	0
Profit in the subsequent years		1,007	15	0

APPENDIX XIII.

Ordinary farming unit of 8-acres.

Strength of cattle.—One pair of bullocks.

Cropping Scheme.

Area in acre.	First year.		Second year.		Third year.		Fourth year.	
	Kharif.	*Rabi.*	*Kharif.*	*Rabi.*	*Kharif.*	*Rabi.*	*Kharif.*	*Rabi.*
1	Cotton..	..	Sugarcane	..	Fallow	Wheat	..	..
1	Sugarcane	..	Fallow	Wheat	Cotton	..	..	..
1	..	Wheat	Cotton	..	Sugarcane	..	..	..
1	Paddy	Peas	*Jowar and Arhar.*	..	Maize	Barley	..	..
1	*Jowar and arhar.*	..	Maize	Barley	Paddy	Peas..	..	..
1	Maize ..	Barley	Paddy	Peas ..	*Jowar and Arhar.*	..	..	..
½	*Chari* ..	Gram	*Bajra-urd*	..	*Peas*	Green manuring.	Wheat	G. Nuts Fallow.
½	*Bajra* ..	Peas	Green manuring.	Wheat	Ground nuts.	Fallow	*Chair*	Gram.
½	Green manuring.	Wheat	Gorund nut.	Fallow	*Chari*	Gram	*Bajra*	Peas.
½	Ground nut.	Fallow	*Chari*	Gram	*Bajra*	Peas ..	Green manuring.	Wheat.
8 acres								

Abstract of area under each crop.

Kharif.	Area.	*Rabi.*	Area.
1. Cotton	Acre.	1. Wheat	1½ Acre.
2. Sugarcane	1 ,,	2. Peas	1½ ,,
3. Paddy	1 ,,	3. *Arhar*	1 ,,
4. *Jowar-arhar*	1 ,,	4. Sugarcane	1 ,,
5. Maize	1 ,,	5. Barley	1 ,,
6. *Chari*	½ ,,	6. Gram	½ ,,
7. *Bajra-urd*	½ ,,	7. Fallow	1½ ,,
8. *Sanai* for G. M.	½ ,,		
9. Ground-nut	½ ,,		
10. Fallow	1 ,,		
	8 Acres.		8 Acres.

Statement showing expenditure and income of 8-acres holding under ordinary farming.

Serial No.	Name of crops.	Area in Acres.	Cost of cultivation per acre.	Total cost of cultivation.	Income per acre.	Total income.	Profit or loss.	Remarks.
			Rs.	Rs. A. P.	Rs.	Rs. A. P.	Rs. A. P.	
1	Cotton	1	20	25 0 0	25	25 0 0	5 0 0	
2	Sugarcane	1	80	80 0 0	125	125 0 0	45 0 0	
3	Paddy	1	20	20 0 0	24	24 0 0	4 0 0	
4	*Jowar-Arhar* ..	1	20	20 0 0	30	30 0 0	10 0 0	
5	Maize	1	20	20 0 0	25	25 0 0	5 0 0	
6	*Chari*	½	10	5 0 0	10	5 0 0	..	
					To be	used for cat	tle feed.	
7	*Bajra-Urd*	½	12	6 0 0	15	7 8 0	1 8 0	
8	Ground nut ..	½	20	10 0 0	25	12 8 0	2 8 0	
9	Wheat	1½	30	45 0 0	36	54 0 0	9 0 0	
10	Peas	1½	10	15 0 0	12	18 0 0	3 0 0	
11	Barley	1	20	20 0 0	27	27 0 0	7 0 0	
12	Gram	½	12	6 0 0	15	7 8 0	1 8 0	
	Total ..	..	..	267 0 0	..	360 8 0	93 8 0	

The profit under ordinary farming on 8-acres would be Rs. 94 against Rs. 204 profit under mixed farming on systematic lines.

ANNEXURE II.

Scheme for experiments and demonstrations on mixed farming in North-West Frontier Province.

1. *Introductory*—

In India the holdings are invariably cultivated with grain crops which bring ready cash to the farmers. These crops have the defect of exhausting the soil of plant food material. The lands are usually continuously cropped, with such crops, with the result that their fertility decreases from year to year and the yields go down correspondingly. In order to maintain the fertility of the soil, what is being removed by the crops should be restored in the form of manures. Stock rearing is considered the cheapest means of preserving soil fertility. Sir John Russel and Dr. Wright in their reports suggest mixed farming, towards the development of the agriculture of this country. They have probably in view the part played by Leguminous fodders and root crops, in the development of British agriculture, which are utilised there for stock rearing purposes.

In view of the above remarks and the fact that our soils, under strong sun rays tend to loose organic matter very quickly, there can be no doubt that mixed farming would go a long way to help in the development of Indian agriculture by increasing the fertility of the soils of this country. Under North-West Frontier Province conditions the importance of conducting mixed farming experiments is more so, than in other provinces because of the fact that such valuable Leguminous fodders as Berseem and Shaftal are successfully grown, and a market for Beef and Mutton already exists.

2. *Details of scheme*—

The Province consists of six districts. For the purpose of Experimentation on Mixed Farming, it is proposed that a holding located in a village should be selected in each district. A matriculate and trained Kamdar should be stationed at each selected holding. He will maintain records and accounts according to the instructions of the Agricultural Assistant, who will be responsible for the conduct of the work. The Headquarters of the Agricultural Assistant will be at the Tarnab Farm and he will visit each place at least once a month. The scheme will function under the guidance and direction of the Agricultural Officer, North-West Frontier Province.

The holdings selected, for demonstration and experimentation on Mixed Farming, will each consist of at least twenty acres. One quarter area of each farm will be devoted to the production of fodder crops. The owner will agree to run the farm, on the line as approved by the Department.

Out of the six farms, two will be for milk production, two for sheep breeding and the remaining two for both sheep and milch cattle.

On a 20 acres Mixed Farm it will be possible to keep the following farm animals :—

1. Two bullocks and six milch cattle.
2. Two bullocks, four milch cattle and ten sheep.
3. Two bullocks and thirty sheep.

By the cultivation of Leguminous fodder crops, application of Farm Yard Manure obtained from the above-mentioned animals and with the addition of judicious artificial fertilizers it should be possible not only to maintain but also to improve upon the soil fertility of a holding.

3. *Finance for the scheme*—

(A) Assistance sought from the Imperial Council of Agricultural Research.

	1st year.	2nd year.	3rd year.
	Rs.	Rs.	Rs.
1. One Agricultural Assistant Rs. 100—10—300	1,200	1,320	1,440
2. Six Kamdars Rs. 20—1—30	1,440	1,512	1,584
3. Travelling allowance	500	500	500
Total ..	3,140	3,332	3,524
	Total 9,996		

The scheme will be for three years. The total assistance required from the Imperial Council of Agricultural Research for the operation of the scheme details given above is Rs. 9,996.

(B) Assistance from the Local Government towards the scheme will consist of—

(i) Clerical help from the staff of the Department of the Province.

(ii) Assistance by the Chemical Staff of the Department in any possible soil analytical work.

(iii) Contingencies to the extent of Rs. 150 a year, for stationery, etc.

(iv) Taccavi to the cultivators, for purchase of implements, seeds and farm animals.

	Rs.
For farm animals	700 per holding.
For implements, seeds and manures ..	150 per holding.
Total ..	850

For six holdings this sum will amount to Rs. 5,100. This expenditure will have to be incurred in one year, immediately on the commencement of the scheme.

Taking all the above into consideration it is clear that the Local Government will be making just as much contribution towards the running of the scheme, as the assistance sought from the Imperial Council of Agricultural Research for setting it into operation.

The Imperial Council of Agricultural Research is, now, requested to approve the above scheme and to finance it at the total cost of Rs. 9,996 spread over three years, on the average of Rs. 3,332 per year.

ANNEXURE III.

An application for a sum of Rs. 4,320 for a 'Mixed' Farming Scheme in Orissa for a period of 4 years.

Both Sir John Russell and Dr. Wright have advocated 'Mixed' farming. The problem now is to work out the economics of the smallest *unit of Mixed Farming.*

The minimum requirement of a cultivator is one pair of bullocks and two cows—one dry and one in milk with a calf. Recently such a scheme was worked out for a private cultivator and it was found that about 7 acres of land will be necessary to raise the necessary food for the cattle which, at the same time, will give sufficient food and money crops to the cultivator. Statement I gives the data of the scheme. But the subject is of so much importance that it needs investigation on scientific lines under controlled conditions. An experiments, therefore, proposed to be conducted on land to be taken on lease close to the Central Farm at Cuttack, so that the work may be under the direct supervision of the Deputy Director of Agriculture.

The scheme provides for one graduate Overseer of the second grade and one Sardar who will live on the farm with the cattle. A suitable kutcha house and a cattle-shed have been included in the estimates. Two good Hariana cows will be purchased—one dry and one in milk. The Hariana is the breed which has been accepted for Orissa under the advice of Sir Arthur Olver.

It is likely that the scheme may continue for over 4 years to get data on which averages can be based. But, for the present, a period of 4 years is being recommended. A good part of the first year will go in preparation and the result of only the last 3 years will be complete and worth consideration.

Statement II gives the recurring and non-recurring costs.

Statement I.

Annual requirement of grains and fodder for 1 milch cow, 1 dry cow and 2 bullocks.		Area required for growing the same.			Crop.	Outturn.
(The milch cow must be of improved breed giving 10 lb. of milk a day.)						
Grain and concentrates.		*Concentrates.*			*Kharif season.*	
For one milch cow—			Grain.	Bhusa.		Mds.
	Mds.		Mds.	Mds.	0·65 acre—Maize—green cobs Rs. 40 Green fodder.	65
At 2 lb. per day Biri.	9	1·50 acres—Biri ..	9	18	0·21 acre—Juar	30
At 1 lb. per day Bran Bran.	4½	1·30 acres—Kulthi	9	18	0·31 acre—Cowpea .. .. Green fodder.	46
At 1 lb. per day Oil-cake.	4½	1·53 acres—Mung	9	18	0·94 acre—Mid sarad paddy. Grain 28½ mds. straw	43
At 3½ lb. per day Kunda	15½	*Dry fodder.*			3·8 acres—Late sarad paddy. Grain 115½ mds. straw.	172
	Srs.					
At ¼ ch. per day Salt	12	4·88 acres—Paddy	144	126	6·00 acres. 144 mds.	

STATEMENT I—*contd.*

Annual requirement of grains and fodder for 1 milch cow, 1 dry cow and 2 bullocks.		Area required for growing the same.		Crop.		Outturn.	
				Rabi season.			
For one dry cow.—		*Green fodder.*		0·10 acre—Potato (followed by hot weather maize).		10 mds. to be sold at market rate.	
	Mds.		Mds.				
At 1 lb. per day Bran	4½						
At 1 lb. per day Oilcake	4½	0·65 acre—Maize ..	65	0·55 acre—Chillies.		5 mds.	ditto.
At 3 lbs. ,, Kunda	13½	0·21 acre—Juar ..	30	0·21 acre—Chillies.		2 mds.	ditto.
	srs.						
At ½ ch. ,, Salt	12	0·31 acre—Cowpea ..	46	0·31 mds. Onion		25 mds.	ditto.
		1·17	1·41				
Green fodder.	Mds.			0·94 acre—Mung		5½ mds.	ditto.
Silage for 4 months for one milch cow.	15	(60 mds. green fodder and 81 mds. for ensilage).					Mds.
				0·59 acre—Mung	Grain 5½ mds.	Bhusa	16
Green fodder for 1 cow at 10 srs. per day for 8 months.	60			1·80 acres—Kulthi	,, 9 ,,	,,	18
				1·50 ,, Biri	,, 9 ,,	,,	18
Dry fodder (straw and Bhusa).							
4 animals at 30 srs. per day 25 mds. for 1 year.							

ABSTRACT.

Grain and concentrates.

	Md.	sr.	ch.
Biri ..	9	0	0
Bran ..	9	0	0
Oilcakes ..	18	0	0
Salt ..	1	8	0
Kulthi ..	9	0	0
Kunda ..	65	10	0
Green fodder and Bhusa—			
Green fodder	100	0	0
Dry fodder ..	200	0	0

ABSTRACT.

	Grain.	Bhusa.	Straw.
	Mds.	Mds.	Mds.
Biri ..	9	18	..
Kulathi ..	9	18	..
Mung ..	9	18	..
Paddy ..	141	..	216
Dry fodder ..		..	216
Legume bhusa		..	54
			270
Green fodder ..		..	144

ABSTRACT.

For Livestock.		*For the cultivator for his use.*		Cash.
	Mds.		Mds.	Rs.
Biri ..	9	Mung	9	36
Kulthi ..	9	Paddy ..	144	216
Green fodder	141	Potato ..	10	30
Dry fodder	216	Chillies ..	7	70
Bhusa ..	54	Onion ..	25	75
Green cobs of maize		..	40	40
				467

(Tehere must be irrigation facilities for irrigating the crops.)

Statement I—*concld.*

I.—Manure requirements.

Paddy 4·83 acres at 50 mds. per acre 242 mds. To reduce the cost of manuring 2·43 acres should be green manured with *Dhanicha* and transplanted, while 2·40 acres should be *manured* with cowdung and broadcasted. This system should be followed alternately every year.

Maize—0·65 acre ..	65 mds. cowdung plus 1½ mds. of Am. Sulphate (Farm)
Juar—0·21 acre ..	21 mds. of cowdung plus 10 srs. of Sm. Sulphate (Farm).
Cowpea—0·31 acre	Ho manure.
Potato—0·10 acre ..	20 mds. cowdung puls 1 md. Oilcake (Farm).
Chillies—0·76 acre ..	76 mds. cowdung plus 2 mds. *oilcake (Farm).*
Onion—0·31 acre ..	31 mds. cowdung plus 15 srs. *Am. Sulphate (Farm).*

II.—Seed requirements.

Kharif.

		Rs.	a.	p.
Maize—Juanpur	8 srs.	1	0	0
Juar—Sabour	3½ srs.	0	8	0
Cowpea—Cuttack	10 srs.	1	0	0
Bam 1 and 1 mid sarad paddy—20 srs. transplanting. Bam 3 and 4 late sarad paddy—35 srs. transplanting. Bam 3 and 4 late sarad paddy—2½ mds. Broadcast.		6	0	0

Rabi.

		Rs.	a.	p.
Potato—Patna	30 srs.	12	0	0
Onion—Local, ½ from seed ..	½ sr.	1	0	0
Onion—Local, ½ from bulb ..	*2 mds.*	8	0	0
Chillies—Pusa	2 srs.	1	0	0
Gray mung	25 srs.	28	0	0
Kulthi—Local	35 srs.	1	8	0
Biri—Local	30 srs.	2	8	0
		62	8	0

Bulk concentrates for the livestock to be purchased.

	Md.	Sr.	Ch.	Price Rs.	a.	p.
1. Kunda	18	0	0	4	6	0
2. Bran	9	0	0	18	0	0
3. Oilcake	18	0	0	36	0	0
4. Salt	1	8	0	2	8	0

Manures and fertilisers to be pur sed.

	Md.	Sr.	Ch.	Rs.	a.	p.
1. Oilcake	3	0	0	6	0	0
2. Am. Sulphatz	2	5	0	10	0	0
				76	14	0

STATEMENT II.

Estimate of cost.

Items of expenditure.	1st year.		2nd year.		3rd year.		4th year.		Total.	
	Share of I. C. A. R.	Share of Provincial Govern-ment.	Share of I. C. A. R.	Share of Provincial Govern-ment.	Share of I. C. A. R.	Share of Provincial Govern-ment.	Share of I. C. A. R.	Share of Provincial Govern-ment.	Share of I. C. A. R.	Share of Provincial Government.
1	2	3	4	5	6	7	8	9	10	11
	Rs. a.	Rs. a.	Rs. a.	Rs. a.	Rs. a.	Rs. a.	Rs. a.	Rs. a.	Rs. a.	Rs. a.
RECURRING.										
One graduate Overseer with an initial pay of Rs. 60 in the grade of Rs. 52—5—124.	360 0	360 0	384 0	384 0	408 0	408 0	432 0	432 0	1,584 0	1,584 0
One Sardar in grade Rs. 20—1—30.	120 0	120 0	126 0	126 0	132 0	132 0	138 0	138 0	516 0	516 0
Leave salary	40 0	40 0	42 8	42 8	45 0	45 0	47 8	47 8	175 0	175 0
Labour charges	187 8	187 8	187 8	187 8	187 8	187 8	187 8	187 8	750 0	750 0
Cattle feed (fodder and grain will be raised in the farm, only oilcake and salt will have to be purchased).	37 8	37 8	37 8	37 8	37 8	37 8	37 8	37 8	150 0	150 0
Miscellaneous contingencies	50 0	50 0	50 0	50 0	50 0	50 0	50 0	50 0	200 0	200 0
Rent of 7 acres of land ..	87 8	87 8	87 8	87 8	87 8	87 8	87 8	87 8	350 0	350 0
Water rate at about Rs. 5 per acre.	17 8	17 8	17 8	17 8	17 8	17 8	17 8	17 8	70 0	70 0
NON-RECURRING.										
Fencing	200 0	200 0	..	..	..	..	..	..	200 0	200 0
Kucha house and shed for Sardar and cattle.	100 0	100 0	..	..	..	..	..	..	100 0	100 0
One pair cows	125 0	125 0	..	..	..	..	..	..	125 0	125 0
One pair bullocks ..	62 8	62 8	..	..	..	..	..	..	62 8	62 8
Implements	37 8	37 8	..	..	..	..	..	..	37 8	37 8
									4,320 0	4,320 0

ANNEXURE IV.

Scheme for conducting experiments on mixed farming in Sind.

The existing trend in crop planning under the Lloyd Barrage area of Sind is chiefly based on extensive cultivation of exhaustive money crops like cotton, wheat, oil-seeds, etc., legumes and fodders find little place in crop ratations. The result is that not only cattle feeds and fodders are not available in adequate quantities and cattle in rural areas are deteriorating but yield of money crops is found going on the decline through a gradual process of soil impoverishment. To remedy this state of affairs, a modification of the existing cropping scheme, embodying livestock keeping might be experimented upon whereby manure should be made available for cash crops to raise yields and the surplus land so relieved might be made to grow legumes and fodders for upkeep of the live-stock.

The object of the experiment should be, to combine land and live-stock not only to maintain soil fertility but also to get adequate income from both sources. The existing system of cropping both on the Government Auxiliary Farms and on private Estates is represented as under :—

Unit of holding 32 acres. To be cultivated with 2 pairs of cattle.

	Acres.		Acres.	
Kharif	9	*Cropped with cotton* ..	7	*Fodders, jowar, bajri etc., 2 acres.*
Rabi	*16*	Cropped with wheat	12	
Fallows	7	Cropped with oil-seeds ..	2	
		Cropped with Miscellaneous ..	2	
Total ..	32			
			23+2=25	

Under this Scheme fodder and legume production is almost absent and such a holding is estimated to fetch income noted below :

		Rs.
Cotton 7 acres at 6 maunds of seed cotton per acre, average Rs. 6 p. m. ..	36 × 7	250
Jawar bajri fodders 2 acres at 125 maunds green fodder per acre 125 × 2 = 250 Mds. at 0-4-0 per Md.	(rounded to)	60
Wheat grain 7 Mds. per acre for 12 acres at Rs. 2|8 per Md. = 7 × 12 × 2|8 ..		210
Wheat bhusa 80 maunds at 0-4-0 per maund		20
Oil-seeds 2 acres at Rs. 20 per acre ..		40
Miscellaneous 2 acres at Rs. 20 per acre ..		40
Total yield Rs.		620

The above figures are based on average yields obtained on average soil and on consideration that the hari or cultivator is engaged on the land throughout the year and the quality of the tillage is also usual one.

The danger in the existing scheme of crop planning is that the yields are likely to go down from year to year.

In order therefore to maintain soil efficiency, we assume that 6 cows with their young stock be maintained on the holding, 4 cows out of the 6 are expected to be in milk throughout the year and the strength of the live-stock on the holding is estimated at :

6 cows.
6 young stock of yearling age.
4 work cattle.

Taking the 6 heads of young stock equivalent to 3 adults, the total adult strength from point of feeding is estimated at 13 heads.

The fodder requirement of the stock is estimated at 1,000 maunds on basis of dry bulky stuff cured from high quality green stuff produced on the Farm.

The cropping scheme of the holding might be modified in such a way as to produce the above quantity of fodder and also to manure the cash crops grown on reduced area in such a way as to get comparatively increased yields. For this purpose the holding is squared up in 8 square blocks of 4 acres each, with well planned rotations.

A modified crop ratation on a holding of 32 acres.

Kharif.	Acres.	*Rabi.*	Acres.
1. Cotton	4	Wheat	8
2. Pulses like *guar*, etc.	4	Berseem	2
3. Jowari, bajri, with subordinate pulses like guar, moth, mung, etc.	4	Vetches	4
4. Fallow	4	Miscellaneous, peas, oats, etc. ..	2
Total ..	16		16

Cotton should be manured by tethering the stock in the fallow area and should not exceed 4 acres. By reducing cotton area there will be saving in irrigation water which can be profitably applied to grow guar, jowari, and bajri on an increased acreage due to the fact that guar requires one or two irrigations after initial soaking to come to maturity.

The increase in kharif area from 9 acres to 12 acres is therefore quite possible and practicable. Similarly vetches have to grow Bosi (dry) from October to January when it might need one or two irrigations to help the crop to mature.

By adopting clean cultivation methods, the fodder yields are estimated to produce 1,000 maunds of dry stuff as noted below :

Name of crop.		Yields in dry.
Guar	4 acres	250 maunds.
Kurbi (Jowar, bajri and guar mixed)	..	250 maunds.
Wheat bhusa (by product) ..	..	100 maunds.
Berseem	..	100 maunds.
Vetches	..	100 maunds.
Miscellaneous	..	50 maunds.
Grazing on stubble, cotton stalks, etc., throughout the year ..	..	150 maunds.
Total	..	**1,000 maunds.**

Estimates of income under the modified system.—Cotton crop on 4 acres after fallow or pulses to be thoroughly manured by tethering cattle or otherwise, is likely to yield 10 maunds of seed cotton to the acre. Similarly wheat on 8 acres rotated with pulses and tethering, is likely to produce 9 maunds per acre.

Four out of 6 cows, should be in milk throughout the year and the daily milking average estimated at minimum of 6 lbs. per head. The daily yield estimated at 24 lbs. is valued at annas 12 per day for liquid milk :

		Rs.
The annual yield on account of milk is estimated roughly to	..	275
Add to this yield of cotton 4 acres at 10 maunds per acre = 40 × Rs. 6 per maund	..	240
Wheat 8 acres at 9 maunds per acre = 72 maunds at Rs. 2-8-0	..	180
Total	..	695
or roughly	..	700

The estimates show that the mixed farmer can get value of Rs. 700 for the modified plan.

Even allowing Rs. 100 for value of milk which he may consume at home, his gross yield goes to Rs. 600 as was the case before. In addition, the yearling young stock, is appreciated in value and the farmer after reserving 2 heads annually for succession to cows and plough cattle, can still sell 4 heads every year to the value of Rs. 60 to Rs. 80.

Government Farms selected for Mixed Farming Experiments.

1. *Agricultural Research Station at Sakrand.*—Here a nucleus herd of 40 Thari cows could be maintained on 100 acres on direct cultivation by Government. The cropping scheme should be on the modified system and the local staff can carry out the scheme in close co-operation with the Live Stock Officer in Sind.

2. *Agricultural Research Station at Dokri.*—Here a nucleus herd of 30 buffaloes of Sind Murrah Breed be established on an area of 100 acres on exactly the same lines as at Sakrand.

3. *Government Auxiliary Farm, Lundo.*—On this Farm about 50 young stock of Thari breed has been recently stationed on an area of 200 acres of kalar land for reclamation purposes : the problem of kalar reclamation should be separate from the Mixed Farming Experiment.

Therefore an area of soil of average quality measuring 64 acres or 16 squares of 4 acres blocks be laid out separately on this Farm and cropped on the modified system under hari cultivation whereby produce

of all fodders be utilized for a herd of 25 to 30 cows. Watch and attendance should be provided at Government expense.

The feeding should be on ' hari ' lines on plenty of green succulents and forages (and with a small supplement of grain rations to milkers only) in order to determine how milk yields can be obtained under such a system. A portion of grain and pulse fodders can be seeded for production of necessary concentrated rations.

The ' haris ' and Government share of fodders and feeds will thus be utilized combinedly for the stock and the ' haris ' in return be given half the yield of sale proceeds of milk and milk products. Also half of the yearling young stock reared on the area be given to the ' haris ' in kind or in form of their actual cash sales. The ' haris ' plough bullocks should be fed free on the holding. To start with the expenses on attendance and watch should, as far as possible, be not recovered from the haris.

4. *Government Auxiliary Farm, Shahdadkote.*—A herd of 50 Bhagnari cows be established on this Farm and maintained on the modified cropping scheme partly under hari system in which only the Government batai share of fodders is to be utilised the balance of grasses and feeds to be produced under direct departmental cultivation.

Finance.—The expenses with regard to capital charges for providing breeding stock and for housing, equipment, etc., may be provided by Sind Government.

While expenses in connection with recurring charges like attendance, etc., be contributed in part by the Imperial Council of Agricultural Research and in part by Sind Government.

Accurate records of consumption of fodders, feeds, and contingent expenses and the corresponding receipts from sales of cash crops, milk and milk products, etc., will be carefully maintained by the Managers in charge.

The Live Stock Officer in Sind will co-operate with the local officers in charge in supervising the details of management and giving technical and general advice.

The attached statements explain Capital and Recurring charges required to carry out the experiments. It will be seen from the figures that the Sind Government has already got a good herd of Thari cows which is being located at Sakrand and Lundo Farms and there is also a breeding herd of Sindhi Murrah Buffaloes to be shifted from Sakrand to Dokri Farm.

With regard to Bhagnari breed at Shahdadkote Farm there will be Capital expenses to be incurred.

The total recurring charges in connection with the mixed farming schemes on the 4 farms are estimated at Rs. 25,000 per year, out of which half or Rs. 12,500 be provided by the Imperial Council of Agricultural Research annually for a period of 5 years.

Statement of Capital........Expenditure required in connection with Mixed Farming Experiments in Sind.

Name of Farm.	Capital Charges.				
	Area required for the experiment.	No. of cows on hand.	No. of cows to be purchased.	Equipment, etc.	Total Capital.
	Acres.				
1. Agricultural Research Station, Sakrand.	100	40	..	..	..
2. Agricultural Research Station, Dokri.	100	30 buffaloes	..	..	..
3. Government Auxiliary Farm, Lundo.	64	25—30 cows	..	..	..
4. Government Auxiliary Farm, Shahdadkote.	150 to 200 as the land is kalarish and sandy.	22 cows. 17 young stock.	28 at Rs. 150 each. Rs. 4,200.	8,200	12,400

Note.—The capital expenditure as per this statement will be borne by Sind Government.

Statement of Recurring Expenditure required in connection with Mixed Farming Experiments in Sind.

Name of Farm.	Cltivation.	Attendance.	Hay storage.	Miscellaneous.	Total.	Remarks as to the nature of experiment.
1. Agricultural Research Station, Sakrand.	3,000	2,600	1,000	400	7,000	Direct cultivation and self-sufficient in matter of food grains and fodders.
2. Agricultural Research Station, Dokri.	3,000	2,600	1,000	400	7,000	Ditto.
3. Government Auxiliary Farm, Lundo.	Hari cultivation.	2,000	500	500	3,000	Hari cultivation self-sufficiency for grain and fed production. Haris' share in milk and young stock at half to half.
4. Government Auxiliary Farm, Shahdadkote.	Direct cultivation. 1,000	3,000	3,000 (Hay storages and concentrates).	1,000	8,000	Combined system of Government share from haris' cultivation and also direct Government cultivation.
Total Recurring Expenditure.	..	..	..	..	25,000	

Note.—Out of Rs. 25,000 half, *i.e.*, Rs. 12 500 will be borne by Sind Government and the balance, *i.e.*, Rs. 12,500 by the Imperial Council of Agricultural Research.

APPENDIX LIV.

Note on Subject No. 21 (e) :—(i) Question of the plantation of fodder trees.—(ii) Application from the Government of Sind for a grant of Rs. 86,400 spread over a period of ten years for a scheme to establish tree plantations for fodder purposes in Sind.

At its meeting held in February 1939, the Animal Husbandry Wing of the Board of Agriculture and Animal Husbandry in India considered the question of fodder trees with special reference to flooded areas. The Board did not make any specific recommendation but considered that as very little information was available, attempts should be made to compile and publish the information that was already available. Relevant extracts from the proceedings are enclosed (Annexure I).

2. In view of the importance of the subject, the Council took the initiative in collecting available information from the Provinces and States and also invited schemes, if any, with a view to have the matter thoroughly examined by the Fodder and Grazing Committee. A statement containing the information so far received is enclosed (Annexure II).

3. A scheme to establish tree plantations for fodder purposes has also been submitted by the Government of Sind (Annexure III). This scheme is estimated to cost Rs. 96,000 over a period of ten years. The Sind Government's contribution will be limited to the cost of land, *viz.*, Rs. 9,600 or one-tenth of the total cost of the scheme. The subject, including the scheme will, in the first instance, be examined by the Central Fodder and Grazing Committee and its report will be submitted to the Board in due course.

ANNEXURE I.

EXTRACTS FROM THE PROCEEDINGS OF THE MEETING OF THE ANIMAL HUSBANDRY WING OF THE BOARD OF AGRICULTURE AND ANIMAL HUSBANDRY HELD ON THE 21ST FEBRUARY 1939.

* * * * * * *

Tree fodder with special reference to flooded areas. [*Subject No. 14 (b) of the agenda.*]

The Assistant Director of Veterinary Services, Orissa, said that the note on the above subject was prepared by the Deputy Director of Agriculture. The position in Orissa was that during the monsoon there was scarcity of fodder and therefore they had to study whether fodder trees could be cultivated profitably.

Dr. Burns said that his note on the subject was largely a list. He referred to the Bombay Department of Agriculture, Bulletin No. 130 of 1926, by Mr. M. S. Tuggerse which contained very useful information on the planting of fodder trees. The planting of trees brought the question of the use of land either for fuel or fodder. He advocated that fodder tree planting should be undertaken on every holding. It would be difficult to protect fodder trees in their young stages, but to protect them a hedge of spineless cactus which was immune from the attack of the insect Cochineal should be erected.

Dr. Gorrie said that the main point in the note submitted by the Government of Orissa was to find out what trees could be grown in flooded land. This constituted a peculiar and rather difficult problem from tree growers' point of view, because there were but few species of trees which were fundamentally suited to growing in flooded lands. The amount of flooding and the seasonal periodicity of flooding was extraordinarily important, *e.g.*, the trees that were able to grow on flooded lands were mostly leguminous ones—*Lelbergia sissoo* and two or three of the Acacias. Practically none of them would survive if they were flooded in the seedling stage for any long period of time so that if it was intended to grow them on a large scale and if the flooding was seasonal and the water was appreciably deep, it would be necessary to build some sort of bunds on which young trees could survive the flooding stage. There were good many species which could stand almost any amount of flooding but none of them were exempt from this difficulty in the seedling stage. It was a very technical problem and rather a very difficult thing to generalise. He advised those interested in the development of tree fodders to get in touch with the local forest officer to see what experience he could provide. It was a most dangerous thing to generalise about this. One species would change its life and respond in entirely different fashion to a given amount of flooding in different areas. For instance, in the irrigated plantations in certain arid zones in the Punjab, a certain amount of irrigation was essential for the plantation to thrive but irrigation water was less than half its worth in terms of depth of inches of rainfall than rainfall itself. In Multan district, rainfall varies from 3 inches to 12 inches. If that 12 inches of rain came in fairly good showers, it was worth at least about 3 feet delta of water given in terms of irrigation. There was, therefore, a very big difference between the value of water given as irrigation and received as rainfall. This point must be kept in mind when discussing the growing of fodder trees in arid zones. Referring to the observation in the note submitted by the Sylviculturist, Forest Research Institute, Dehra Dun, that " a large percentage of fodder lopped is invariably left untouched by the animals which, while still hungry, will turn from a good fodder species and eat leaves of other species not generally considered good fodder. The reason for this is not fully understood unless it be that leaves must be absolutely fresh when fed to the animals ", Dr. Gorrie said that again was a dangerous generalisation to make. In many districts of the Punjab, they continued to feed leaves to cattle unless they were very dry. The dry leaves are fed mixed up with Bhoosa for a number of months and when the next ploughing season comes, the remaining dry leaves are put in the fields as manure so that there was no waste. The whole subject bristled with difficulties and he, therefore, advised those who were interested in this vital subject from the point of supplementing the supply of fodder to get in touch with people who really knew the district, and the technical difficulties of growing local species.

Mr. Richards said that although a great deal had been heard about the management of grassland for the production of maximum amount of fodder from an area, nothing had been heard about the management of trees grown for fodder in order to produce the maximum amount of nourishment from that source. Unless work is done in this direction to serve as a guide all the work in progress in various areas including the United Provinces might be wasted. It was essential that they should know how to treat their trees of different varieties in order to get the maximum amount

of loppings from them for fodder purposes. He complained that if they asked for such information from a forest officer, he said that this was related to gardening and when they asked a gardener, he said that this pertained to forestry.

Mr. Kerr said that in Bengal, several areas remained under water about 3 to 4 feet deep and they wanted some plantations which would remain above flood level for feeding the animals during three to four months of heavy rainfall. They had the same complaint as Mr. Richards had about getting the necessary information about suitable fodder trees. In Bengal, they found that banana trees could stand floods. When no other green fodder was available, the elephants could live upon leaves of banana trees. He desired to know whether it was worth while spending on wild banana plantations for obtaining a supply of green fodder in the rainy season. Mr. Kerr also desired to know the type of water plants, roughage, etc., which buffaloes would readily eat and thrive on. During flood times, animals who did not get anything else to eat could exist on water hyacinth. He wished to have some guidance from the officers present in the Board as to how they might proceed to get the necessary information sought in paper No. 14 (*b*). Certain trees could, no doubt, grow in marshy areas, which though not first class fodders were at least better than starvation.

Mr. Read said that at the Hissar farm they were doing silaging of tree leaves. The leaves of *sheesham* (Dilbergia sissoo) were readily eaten by cattle. He, however, pointed out that the cost of removing leaves from twigs was considerable. This was a matter for the agricultural engineers.

Mr. Ulvi said that in Sind, they grew *Babool* (Acacia sp.) plantation in the fields. They would irrigate land, and drill in *juar* or *bajri* and Babool trees, the latter 30 or 40 feet apart. The *babool* trees were cut in winter, the leaves were dried and mixed with rice, bran and given to milch cattle or dry cows as concentrated food along with rice straw as roughage. Babool tree was, therefore, most important in Sind.

Dr. Burns said that very little information was available on the subject. It was, therefore, most important that any information which was already available should be compiled and sent up for publication in the Council's journal "Agriculture and Livestock in India".

ANNEXURE II.

STATEMENT SHOWING THE PRESENT POSITION WITH REGARD TO THE PLANTATION OF FODDER TREES IN CERTAIN PROVINCES AND STATES.

Bengal.—The plantation of fodder trees is not a practical proposition in this province for the following reasons :—

(1) No seedlings will stand water-logging for a period of two or three years and as such there will be great difficulties in starting nurseries for growing fodder trees in Eastern Bengal.

(2) Generally there is no such great scarcity of fodder in this province as to induce cultivators to give up land for tree planting.

(3) The leaves of some varieties of trees which grow in flooded areas, are not eaten by cattle and the leaves of such trees as the

Ficus species, etc., which are eaten, are usually grown on raised lands near the homestead.

(4) The practice of topping trees for the purpose of fodder in flooded areas is not common in this province.

United Provinces.—As regards the question of tree fodder plantations in waterlogged or flooded areas, no work has been done in this province. The Provincial Government are for the present concentrating attention on getting on with large scale creation of plantation in areas not liable to waterlogging or flood in the light of available knowledge. There is considerable scope for research and experiment on problems connected with fodder plantations, *e.g.*, the best silvicultural mixtures in the plantations, the best fodder species to grow, etc., but further experience will be gained *pari passu* with the creation of the plantations in connexion with the village plantation plan on which this Government have already embarked. The Provincial Forest Department have considerable experience of this work and it is considered that the work of development should not be postponed for years and decades till scientific answers have been obtained from new experiments. What is, however, necessary is the early determination of the comparative value of green leaf fodders at different seasons of the year from the principal tree fodder species of this province for which the Chairman of the Provincial Fodder and Grazing Committee has already written to the Director, Imperial Veterinary Research Institute, Muktesar. This Government will be grateful if the Indian Council of Agricultural Research could get this research accelerated at the Central Animal Nutrition Institute, Izatnagar, as proposed.

Bihar.—In Bihar there are no arid zones and the areas in which the cultivation of fodder trees would appear to be desirable are the flooded tracts of Bihar and those areas of Chota Nagpur which are being eroded at a dangerously rapid pace.

2. As far as the flooded areas are concerned scarcely a tree is to be seen in those areas like the Mokameh Tal that are liable to inundation year after year. There are several such tracts on the banks of the Ganges and in the valley of the Kosi and if any flood resisting fodder trees are known the dpartment would be most agreeable to try them in collaboration with some of the Zemindars in those tracts. As regards Chota Nagpur, there are large tracts which at the present time provide no grazing even in the monsoon as the result of gulley and sheet erosion and if fodder trees could be planted in such places they should prove a great boon. Recently I obtained seed of Australian mesquite from the Chief Conservator of Forests, Punjab and the cultivation is being tried on parts of Kanke Farm that have been badly eroded. The ripe pods are appreciated by cattle.

3. No scheme can be submitted as no information on the use of fodder trees is available.

N.-W. F. P.—The present situation of fodder problem in N.-W. F. Province is revealed by the following lines :—

N.-W. F. Province is a small Province with its very limited number of pastures and grazing grounds which are quite insufficient to accommodate a large number of cattle as existing aat present. The cattle are mostly non-descript and not properly nourished. Therefore fodder problem which is confronting our Province at present is acute one. Civil Veterinary Department has, however, taken up a step for the improvement of cattle

in our province by means of distributing breeding bulls of pure Awankari breed in various central villages of the Province. But this is only one sided work and unless and until the real problem of fodder supply is solved, nothing substantial can be achieved in the way of cattle improvement.

Since long, the Department of Agriculture has been concentrating its attention on this problem, which is being tackled by the following means. It will be observed that the efforts of the Department are successful to an extent :—

1. Improvement of indigenous fodders.
2. Introduction of new fodders.
3. Improvement in the method of storage of different fodders.

1. A great improvement has been effected in indigenous fodders, *e.g.*, introduction of berseem, which has replaced local shaftal in most places. Berseem is one of the best leguminous fodder crops. It is exceptionally good and valuable for cattle being comparatively richer in digestible crude protein and mineral matter. It also leaves the land much richer than when it was sown. It can be used green, made into hay, or turned into silage. It is very palatable and cattle relish it. The plants are most nutritious at the beginning of the flowering time when they should be cut to obtain the maximum nutriment. It provides fodder for about seven months of the year, *i.e.*, from mid November to end of June.

Berseem at present covers an area of 1,32,300 acres. But due to very remote advent of the crop it has undergone a considerable deterioration. There is a general complaint from zamindars that its seed is much contaminated with chickory and other weed seeds. Therefore very recently we have taken up the following two methods to affect improvement :—

(*a*) *Mass Selection* :—Fully developed flowers are selected from which seed is separately extracted. This seed is sown for next year's multiplication in a plot quite free of weeds, etc. The practice is to be followed till we get pure seed of a distinctly better type.

(*b*) *Weed control by means of rouging* :—In this case chickory and other obnoxious weeds are eradicated from Berseem fields before its final cutting for seed. The practice is to be continued for a number of years till we have plots quite free from weeds, etc., to obtain berseem seed in its pure form.

Considering the whole fodder supply of the Province it is observed that fodder becomes easily available for about seven months of the year. But we are faced with the problem of fodder supply from July to November. However, cowpeas can supplement the fodder supply for about 2 to 2½ months, *i.e.*, from mid July to end of September, if the zamindars would grow it for fodder in the month of March.

Other local fodders that can be grown during this period of scarcity are maize, small Jowar, and guara, etc. An experiment was conducted at Tarnab to find out a most suitable fodder for this period :—

Following were the treatments under trial :—

(a) Maize alone.

(b) Maize and cowpeas mixture.

(c) Small Jowar alone.

(d) Small Jowar and cowpeas mixture.

(e) Cowpeas alone.

The results show that highest yield of 59,850 lbs. of green fodder was given by small jowar. But it may be pointed out that yield is not the only criteria for judging the value of a fodder. Its nutritive value and palatability also count much. Therefore it seems that maize and cowpeas mixture is a most suitable Kharif fodder in all respects. It has given a yield of 56,550 lbs. green fodder to an acre. The experiment however is to be repeated for sometime to get conclusive results.

Introduction of new fodders :—The object is to see whether selected fodders would be able to replace the local ones grown during that period. A number of grasses were under trial at Tarnab and Naurang Farms since last so many years, but nothing substantial has been achieved in this direction so far. At present the following grasses are under trial :—

1. Napier or Elephant grass.
2. K. Ragi.
3. Sudan grass.

But we intend to include the following in very near future :—

1. Rawan-Mewara variety.
2. Reana grass.
3. Sudan grass and Rawan mixture.

These experiments for the introduction of new fodders will take time before we would be able to say something definite about their usefulness.

III.—*Storage of fodders and grasses* :—

It has been found at Tarnab that certain grasses and berseem can be most economically utilized and fed in time of scarcity if their proper storage is undertaken.

In our province we are seeing a gradual increase of area under orchards. During fruit season when it is not advisable to sow any fodder or other crop in the matured orchards, naturally green grass grows in abundance. If it is not stored carefully for use in scarcity most of it goes to waste. Experiments with fodder storage have been conducted at Tarnab since years and are still in hand. It has been found that cost of storing a maund of green grass in a silo pit comes to 0|1|10. Grass is always to be stored in semi-arid condition. The method is being recommended to zamindars by means of propaganda and actual demonstration in villages.

Analytical work, *e.g.*, fodder analysis or other nutritional experiments could not be undertaken so far due to lack of equipment. Neither there seems any scope of their being undertaken in the near future.

But it is hoped that improvement in indigenous fodders, introduction of new fodders, improvements in the methods of storage, improvement and increase of grazing grounds and pastures, etc., etc., are the steps, in some of which the Department has already gone a long way, which aim at ameliorating the lot of our poor cattle and the poor peasant.

Mysore.—The problem of growing fodder trees for the supply of fodder in flooded areas which is the subject matter of the communication

from the Imperial Council of Agricultural Research does not arise in Mysore. The problem in the State is, on the other hand, just the reverse, namely, how to provide for fodder against conditions of drought. No satisfactory fodder tree is available here to suit the conditions in the dry areas. In the case of some of the trees which could be thought of and the pods of which are eaten by cattle, the result of raising the plantation will be far out of proportion to the actual yield that could be expected, nor would it be possible to raise any such plantation in unenclosed ground. So long as the ground is arranged to be enclosed, the Hebbal dry Napier grass which grows to a height of 6 (six) feet even on poor soil under rainfed conditions and remains fairly green throughout the year would be an easily practicable remedy instead of raising a plantation of fodder trees whose scope for extension is considerably limited in view of time, trouble and expenses involved. The Estate Agricultural Department has, therefore, proposed to concentrate its attention and efforts in the extension of Hebbal dry Napier grass which is an easily practicable solution of difficulties in the State. If, however, trial plantations may be started, varieties of ficus trees which easily grow in Mysore even from stamps in the rainy season, would seem to be a practical step to take.

In the above circumstances, there is not much use in raising plantations of fodder trees in the State whose leaves are either difficult to pick or whose pods alone are serviceable.

Bhopal.—List of fodder plants in Baroda State.

Acacia Arabica, Willd. Vern. Babul or Kikar. The tender shoots, leaves and green pods are much liked by cattle and the tree is greatly valued in regions affected by drought.

Acacia ferruginea, De. Cattle eat the lower and small branches.

Acacia Catechu, Willd. Cattle eat the flower and small brahches.

Acacia leucophloea. Willd. Leaves and Pods. The latter however are considered by some to be poisonous and should be used with caution.

Acacia Suma, Kurz, Wern. Safed Khair. Leaves and young branches.

Adina Cordifolia, Hook, f. Leaves.

Aegle Marmelos, Correa. Bael tree. Brandis mentions that the twigs and leaves are lopped for cattle fodder.

Ailanthus excelsa, Roxb. Leaves.

Albizzia Lebbeck. Benth. Vern. Siris. The leaves of this tree are considered to be good fodder for cattle.

Albizzia odoratissima, Benth. The branches are lopped for cattle.

Anogeissus latifolia, Wall. Leaves.

Balanites Roxburghii, Planch. The young twigs and leaves are said to be browsed by cattle.

Bassia latifolia, Roxb. The leaves, flowers and fruits of the mahua tree are eaten by cattle. The flowers are said to be very fattening.

Bauhinia Purpurea, Linn. The leaves are lopped for cattle fodder.

Bauhinia recemosa, Lamk. The leaves of this tree are eaten by buffaloes.

Bombax Malabaricum, DC. (Semal or cotton tree). The twigs and leaves are lopped for fodder in the Hoshiarpur district and elsewhere.

Boswellia serrata, Roxb. Buffaloes eat the leaves.

Briedelia retusa, spreng. The leaves are valued as fodder and the tree is frequently lopped. Cattle fed on these leaves are said to be cured of worms.

Buea Frondosa, Roxb. The dhak tree. Buffaloes are very fond of the leaves and their milk is said to be improved thereby. They are said to be more wholesome if given when not quite fresh. Camels and goats will not touch this tree.

Calotropis Gigantea, R. Br. In Chutia Nagpur, cattle eat the leaves.

Calotropis procera, R. Br. Cattle will eat the dried leaves.

Calottropis Gigantea, R. Br. In Chutia Nagpur, cattle eat the Canara district of Bombay.

Cassia *Fistula, Linn.* Vern. Amaltas. The twigs and leaves are lopped for cattle fodder in Oudh and Kumaon.

Cordia Myxa, Linn. The leaves are given to cattle.

Dalbergia latifolia, Roxb. In Oudh, according to Brandis the tree is pollarded for cattle fodder. In the Bombay Presidency also it is said to be used for fodder.

Eugenia Jambolana. Leaves and also fruits.

Erythrina suberosa, Roxb. Buffaloes eat the leaves.

Ficus glomerata, Rox. Leaves and fruit.

Flacourtia Ramontchi, L' H'erit. Leaves.

Garguga Pinnata, Roxb. Leaves.

Gmelina arborea, Roxb. Cattle are fond of the fruit.

Grewia tiliaefolia, Vahl. Leaves.

Helicteres Isora, Linn. Buffaloes eat the leaves.

Holarrhena Antidysenterica, Wall. Leaves.

Holoptelea, integrifolia Planch. (=Ulmus integrifolia Roxb). "The leaves are lopped for cattle fodder and the tree is often used to stock fodder for supply" (Brandis).

Hymenodictyon excelsum, Wall. Leaves.

Kydia calycina, Roxb. Buffaloes eat the leaves in the Central Provinces.

Lagerstroemia parviflora, Roxb. Buffaloes eat the leaves.

Mallotus philippinensis, Mull. Vern. Kamela, Buffaloes eat the leaves.

Millettia auriculata, Baker. This climber is extensively lopped to afford fodder to buffaloes.

Melia azedarach. Leaves.

Morinda Tinetoria, Roxb. Vern. A'I. In the Rewa Kantha District of Bombay, the leaves are given to the cattle when grass and forage are scarce.

Odina Wodier, Roxb. This tree is often lopped and pollarded the leaves and branches being a favourite fodder of cattle.

Ougeinia dalbergioides, Benth. The branches are often lopped for cattle fodder.

Phyllanthus **Emblica, Linn.** Vern. A'mel. Buffaloes eat the leaves and fruits.

Pongamia glabra. Vent. (Indian Beech) Cattle are said to be fond of the leaves of this tree. It is almost evergreen and is much used for planting along roadsides. Grass grows well under its shade.

Prosopis spicigera, Linn. Vern. Fand. The pods are eaten by cattle. Though not so nutritious as the fresh pods of the babul, they can be kept good longer.

Randia dumesorum, Lamk. The leaves are lopped and used as cattle fodder.

Randia Uliginosa, DC. The leaves are browsed by cattle.

Saccopetalum tomentosum. Hk. F. & T. The leaves are used as cattle fodder.

Schileichera trijuga, Willd. In Oudh this tree is lopped and the twigs and leaves are used as cattle feeder. Mr. Smythies says that the fruit also is eaten by cattle

Soymida febrifuga, A. Fuss. Buffaloes eat the young leaves in the Central Provinces.

Spondias mangifera, pers. (Hog Plum.). Cattle eat the leaves and according to Mr. Smythies, the fruit.

Strobilanthes callosus, Nees Vern. Karvi (Bombay). This shrub flowers profusely every eight or nine years, and then becomes covered with a stickly exudation (Mel.) Herds of cattle gather from all sides to feed on it.

Terminolia Arjuna, Bedd. Cattle eat the leaves in Chutia Nagpur (Rev. A. Campbell), and the young leaves are eaten by buffaloes. (R. Thompson).

Terminalia belerica, Roxb. Vern. Bahera. In the Kangra district the leaves are considered to be the best fodder for milch cows.

Terminalia Chebula, Retz. Vern. Harar. Cattle are said to eat the leaves of this tree.

Tinospora Cordifolia, Miers. Vern. Golancha. This twining plant which is common on trees in Bengal villages, is generally eaten by cattle. People gather it occasionally, and give it to their animals cut into small pieces. It is said to increase the fow of milk in milch cows, but it gives a smell to the milk (T. N. Mukherji).

Vantilago Calyculata, Tulasne. Buffaloes eat the leaves in the Central Provinces.

Woodfordia **floribunda, Salisb.** Cattle eat the leaves.

Wrightia tinctoria, R. M. Leaves are eaten by buffaloes in the Jaypore State (Bhai Sadhu Singh) and by buffaloes in the Central Provinces (R. Thompson).

Zizyphus Jujuba, Lamk. Vern. Ber. The leaves are much valued as cattle fodder.

Zizyphus rugosa, Lamk. Cattle eat the leaves in Chutia Nagpur.

Zizyphus Xylopyra. Willd. Vern. Kather. The young shoots, leaves and fruit serve as fodder for cattle.

NOTE I.—Several species as mentioned in the note are found in the forest tracts and the people in the forest tracts find no difficulty in getting fodder for cattle of any kind. Forestry demands that only valuables should be grown and encouraged. As some of the fodder plants are of no value from the sylvicultural point of view people are allowed to lop such trees.

NOTE. II.—Besides the above, leaves and young shoots of bamboo in general are lopped for fodder for cattle and elephants.

Bhopal.—After a careful consideration of the problem, it has been found that the prevailing conditions in this State are such that there is absolutely no necessity of planting fodder trees in Bhopal as :—

(1) the local supply of fodder is quite enough to supply all our fodder requirements ; and

(2) according to the local practice, *Pipal, Khagur* and *Khankar* leaves are sometimes given to cattle, as a change, and these are present in large numbers all over the State territories.

Cochin.—There are no long standing or continuous floods in the State as occur in Orissa or in parts of Upper Burma. Fodder trees as such are not grown in the State, but the leaves of the following trees are fed to cattle

Pithecolobium Saman (Rain tree).

Pterocarpus marsupium (Venga).

Xylia dolabriformis (Irul tree).

Luciana Gloacca.

No experiments had been made in the matter.

ANNEXURE III.

A SCHEME TO ESTABLISH TREE PLANTATIONS FOR FODDER PURPOSES IN SIND.

Introduction.—Notes on fodder trees grown in Sind and Babul "huri" plantation in Sind, are herewith attached. It is proposed to establish a series of tree plantations in Sind to serve as a source of fodder and at the same time afford good pasture for cattle. A unit of 10 acres should be sufficient. About one dozen plantations may be commenced and started in different parts of the Province. The Scheme should be sanctioned for 10 years in the first instance.

Programme of Work.

(1) What types of trees are most suitable.

(2) The best methods of planting.

(3) The quantity of fodder produced from the leaves.

(4) Sowing of natural grass within the plantation and testing of different types.

(5) The number of cattle that can be maintained.

(6) Ultimate effect on the improvement of land after the tree plantation is cut down.

(7) Water requirements.

(8) Economics of tree plantations.

The District Agricultural Overseer of the Agricultural Department will be in charge of the plantation under the control of the Deputy Director of Agriculture.

Financial Aspect.—This will be seen from the statement enclosed. Each centre will cost Rs. 2,000 and the total cost of the Scheme will be Rs. 96,000 (ninety-six thousand).

Capital Expenditure.

	Rs.
12 centres at Rs. 2,000	24,000
Recurring Expenditure (ten years' Scheme).	
12 centres at Rs. 600 per centre = Rs. 7,200.	
10 years Scheme = 10 × 7,200	72,000
	96,000

As this is an entirely new scheme, the Imperial Council of Agricultural Research is requested to finance the Scheme with the exception of cost of land which will amount to Rs. 9,600 to be borne by Sind Government.

K. I. THADANI,
Director of Agriculture, Sind.

ESTIMATED COST OF ESTABLISHING TEN ACRE HURIES OR FODDER TREES PLANTATIONS, NATURAL GRASSES, ETC., IN SIND.

A. *Capital.*

	Rs.
(1) Cost of land at Rs. 80 per acre	800
(2) Layout, etc., at Rs. 10 per acre	100
(3) Removing root stalks, levelling, tractor ploughing etc., at Rs. 15 per acre	150
(4) Fencing	700
(5) One pair of bullocks	200
	1,950
Rounded to ..	2,000

B. *Recurring Expenditure.*

1. Cost of seeds of fodder trees and natural grasses ..	50
2. Cultivation charges including maintenance of nursery—one man and pair of bullocks ..	500
3. Water cess and other charges	50
	600

FODDER TREES GROWING IN SIND.

1. *The Babul* (Accasia Arabica).—It is the most important fodder tree, useful throughout the year, to the cultivator in Sind. This tree provides roughage of all kinds for live stock in the shape of :

(*a*) *Leaves*.—These are eaten mostly in winter season. The tree is thorny and therefore is eaten by goats and camels in green condition, but buffaloes and other cattle feel difficulty in eating the green leaves, which exist along with thorns. Therefore the procedure is to lop thin branches from the tree and keep them exposed for three or four days, whereby the leaves lose some moisture and still remain green. The branches are then beaten against some hard ground, etc., which permits shedding of the leaves ; which are collected and stored. The leaves in this condition make a nutritious stuff, which is added as a supplement to rice straw or wheat chaff for a balanced ration. For concentrates a small quantity of jambho cake or rice bran is also fed. This sort of ration is usually given to work cattle, milch cows, young growing stock, etc. The season for Babul loppings extends from November to February. From February onwards spring season begins, and new growth takes place, therefore lopping in hot weather or summer season is prohibited.

(*b*) *Babul pods*.—The Babul trees are lopped every alternate year, so that growth takes place oin one year and pods are yielded in the following year. Some trees are partially lopped with some discretion, so that growth is not interfered with and the crop of pods as well as leaves is taken in the same year. The commonest practice with small holders is partial lopping. On big holdings, where Babul tree abounds in convenient places in field, some trees are left unlopped and reserved for babul pods alone, while other trees are entirely lopped. Babul pods begin with the advent of hot weather, *i.e.*, middle of April onwards and are fed to stock when the pods are filled with thick milky juice. At this stage, the pods are said to be very nutritious, and can be substituted for concentrated ration. A ration of about 20 lbs. of pods in milky stage will be enough for a buffalo yielding 20 lbs. of milk per day, with addition of ordinary roughage like rice straw or wheat busa. For a milch cow giving 10 lbs. of milk a 10 lbs. ration of the pods will be the limit. The cattle eat the pods with relish and growing young stock make rapid growth on this sort of ration. The season for milky pods is however very short ; about six weeks, after which the pods dry on the trees and fall down in the month of June The cattle owners are usually busy in hot weather, in collecting Babul pods by means of sharp hooks adjusted to long bamboo sticks, which are used against tall trees. The milky pods are also dried and stored for future use. The pods that are allowed to stand on the trees are too high for picking, get ripened and dried up, whereby the seed is matured. The dry pods, which shed in the month of June are collected and also make a good ration. As a rule cattle are left under the trees, to pick up such pods, for which they are very greedy.

From the above description it will be seen that the Babul tree provides food to cattle from November to February in the shape of green twigs and leaves and from March to April in the shape of flowers which are borne profusely and which on falling are gathered or picked by cattle ; from April to June-July a crop in the shape of nutritious pods. This tree therefore stands foremost under arid or semi-arid of partially flooded areas.

Every cultivator or zamindar allows self-sown babul shrubs at intervals in the field. In many places the margins of fields are confined to babul trees. This case is applicable to small growers and to cultivators, who as a rule will not destroy the trees which afford them fuel, fodder, forage and shade to livestock against hot summer sun. The babul also is noticed ot tolerate growth of ordinary crop under it. The grain crops like wheat, sorghum, paddy and pulses like mung, monhin, guar, and legumes like Berseem, Shaftal and fodders like oats, barley, saon (panicum crusgalli), etc., grow fairly well in association with this tree. However landlords and village sites, usually lay out separate areas under what is called "babul Hurries" of measurements over 5 to 10 acres or so for the "Gao Aram" or grazing and resting site of village cattle.

Babul Hurries.—Babul hurries or babul plantations are more or less a common feature under conditions of Sind. No doubt such "Hurries" are now declining specially under post-Barrage conditions yet they exist in good numbers specially in lower Sind in non-barrage areas. A babul "Hurrie" is as a rule self sown. Goats eating dried pods, drop the entire seed in the act of rumination and thereby the seed mixes with goat droppings. Hence goat and sheep foldings in fields as a rule give rise to self-sown babul trees ; which may be protected for "Hurrie" growth.

In order to lay out a babul "Hurrie", babul seed is sown, broad cast, with jowari or bajri crop or in lines about 30 feet apart, as a subsidiary crop to jowar and bajri. The seedlings sown under such conditions and protected against camel and goats, after the grain crop is harvested, make rapid growth and do not require irrigation till the next kharif season. If irrigation is supplied to the plantation in the following kharif season by means of flooding upto 6 inches or 8 inches, two or three times in the whole plantation is to be fenced properly. The young trees regrowth of various nutritional grasses under and in between the trees ; the whole plantation is to be fenced properly. The young trees require pruning from below in order to develop shape for spreading. The cattle can be left in the plantation for natural grasses and also prunings of the small trees. Within three years the plantations become mature for seed bearing and loppings may be obtained from lower part till the age of five years. From five years onwards the trees yield full crops of leaf and pod and can continue indefinitely. It is a custom among growers to cut off the plantation after 10 years, whereby the land is utilized for ordinary farming and the "Hurrie" is established elsewhere. A babul "Hurrie" at the age of 10 years gives good returns from sale of wood and charcoal prepared *in situ* from the matured wood. The land becomes fertile to give continuous cropping for next three years without manuring.

Suitable soils and Resistance to water logging, etc.

The soil for babul tree is not a great consideration. Ordinary Kalar soils or sweet soils of all descriptions, with the exception of pure drift sands will suit this tree remarkably well. The tree at the age of 2 years. is noticed to stand water logging during inundation period. Forests along river banks, receive inundation water, two to four feet deep for two or three months continuously and yet the trees show least signs of lack of vitality or growth. Young trees of about 10 feet height which is attained in about two years, behave similarly.

In regions where rainfall is heavy and the land is submerged for three or four months, I would suggest that the tree may be propagated by seeds deposited on high embankments of rice fields during monsoon season. The seedlings can withstand draught in the dry weather if they are given a little hoeing after the monsoon rains are over. It is very likely that the tree will make rapid growth and will be useful as a fodder tree in the flooded area of Bengal.

Varieties.

There are several varieties of accasia arabica growing under conditions of :

(*a*) Inundated Sind.

(*b*) Kohistan or hilly tract of Sind, where the tree grows in depressions and other favourable situations under rainfall conditions.

(*c*) In the sand dunes of the desert area, where the tree grows on ridges of compact sand-dunes and slopes.

Of all these, the variety which grows under the conditions of inundated Sind is the best for quick growth and high yields.

Yield.

The yield of leaves per adult tree is not actually weighed but can be estimated at 40 lbs. of semi-dry stuff.

Yield of "Pods" in green condition is estimated at 500 lbs. per adult tree of 10 years of age.

II. *Kandi* (Prosopis spicigera).

This is a bush, spreading in habit, but if pruned properly, tends to grow into a tree like babul. It grows under arid conditions and very scanty rainfall and yields :—

(*a*) A crop of leaves in winter season.

(*b*) A crop of green pods or dry sweet pods from April to May.

The leaves are relished by sheep, goat and camel ; cattle eat leaves of superior quality trees in winter season.

III. *Albizzia Lebbek*—"Sirinh".

This tree is commonly grown along road-sides, village sites, etc., and is utilized for its crop of leaves for all kinds of livestock in cold weather.

The tree grows to a big size and is useful from point of feeding cattle about twice in the year if partially pruned each time.

IV. *Shivri or Manjandri.* (Sesbania Aegyptiaca).

Shivri or Manjandri is a quick growing small tree which is used for hedges and for cattle food. Its life is about 4 years after which it requires replacing. In six months' time from the time of sowing it makes rapid growth and yields top prunings for fodder. Then the trees develop bushy growth which is cut periodically and regularly. In cold weather it produces pods which are also fed to cattle. The Shivri plant grows under irrigation during the rains and can live with minimum amount of moisture till rains come back. It can withstand flooding for some time and hence it will be useful to plant along raised embankments of rice fields. It is worth trying under conditions of Bengal.

Cattle do not relish it at first but get accustomed to it in due course.

V. *Pangara Erythrina Indica.*

This tree grows under moist conditions and heavy rainfall. It is propagated by cuttings as well as by seeds. The cuttings planted in monsoon season make rapid growth. During hot weather and monsoon the leaves are used for cattle feeding. In Bengal it might be planted along raised embankments.

VI. *Kachnal* (Bauhinnia racemosa).

This is a small sized tree which is grown along road side and on raised banks. The leaves as well as flower buds are utilised for cattle food. It is ever green.

VII. *The Plantain* (Musa sapientum).

There is a large number of varieties of country plantains which grow in thickets along rice embankments and which can stand some degree of flooding. The leaves and top portion of stocks are relished by cattle. They may be given chopped with other bulky feeds.

VIII. *Pepal* Tree (Ficus Religiosia).

These are large trees without aerial roots. The leaves and twigs are utilised for cattle fodder. It is perennial tree and once established will grow persistently.

IX. There are large number of trees and bushes which grow under desert conditions in Sind. These are described below :—

1. Jungli Neel (Wild Indigo).
   (Indigofera), eaten by goats, camel, etc.
2. Jar or Khubar (Salvadora Persica) eaten by camels.
3. Kirar (Capparis Aplylla) browsed by goats.
4. Wild Ber (Zirziphis Jugulu). Eaten by goats and camels.

NOTES ON " BABUL HURRI " PLANTATIONS IN SIND.

Under Sind conditions the most useful fodder trees relished by all kinds of stock is the babul.

Babul Hurries require to be developed in every village under conditions of Barrage and non-Barrage areas. Waste lands which are fairly level and which may be impregnated with a little " kalar " should be embanked and flooded and sown with jowari and bajri and green crop mixed with babul seeds in Kharif season. The green crop requires watering 3 or 4 times and will be ready for harvest by October. Care to be taken at the time of harvesting the green crop to preserve the young babul trees which may be about 1 to 1½ feet high at that time. The area should be enclosed with thorny fence and should be occasionally flooded with spill water or regularly irrigated at intervals of 2 months every year to a depth of 6 inches to 8 inches.

On good lands the babul should be planted in rows 30 feet apart along with jowar or bajri crop.

The trees if well protected and occasionally irrigated will grow sufficiently high in 3 years. Natural grasses will grow between and under the trees and will be a source of nutritious food to cattle which may be

allowed to graze in rotations by making one acre compartments. A babul hurri will continue yielding twigs and pods for two decades and over under the system.

The size of hurri should be between 5 to 10 acres and the carrying capacity per acre for grazing purposes should be about 20 adult cows. The hurrie grazing should be considered as supplement to bulky roughage like wheat, busa, rice straw, etc.

Construction for planting of hurries should be made popular throughout the province in order to raise quality cattle which is essentially necessary for upkeep of cultivation in the province of Sind.

If necessary Government may charge a small water rate of Re. 1 per acre per year. In my opinion 5 per cent area of each 'Deh' should be converted into hurries.

APPENDIX LV.

Supplementary Note on Subject No. 21 (e) :—(i) Question of the Plantation of Fodder Trees. (ii) Application from the Government of Sind for a grant of Rs. 86,400 spread over a period of 10 years for a scheme to establish Tree Plantations for fodder purposes in Sind.

In continuation of the note, dated the 31st October 1939, the following papers are circulated for the information of the Board (*vide* Annexure II of the note) :—

1. Short note by Mr. J. A. Wilson, together with a copy of the report thereon by the Chief Conservator of Forests, Madras.
2. Note by the Director, Anti-Erosion Circle, Punjab.
3. Note by the Director of Agriculture, Punjab.

2. No experiments on the cultivation of fodder trees have been undertaken by the Government of Travancore, nor is the system of plantation for fodder trees adopted by the ryots in any part of the State.

FODDER TREES—PLANTATION OF—SHORT NOTE.

I.—*Note by the Chief Conservator of Forests, Madras.*

I enclose a copy of a note on the question of Fodder Trees by Mr. J. A. Wilson who was, till recently, Special Grazing Officer in this province.

2. I agree with what he says, and I would further point out that in Madras the question of growing fodder trees is not so urgent as that of improving the grazing.

3. Where agri-forestry can be practised on the lines suggested by Mr. Wilson trees the leaves of which are readily eaten by cattle can be included amongst those planted where it is considered that the cultivation of grasses between the lines of trees is likely to provide insufficient fodder. This must not, however, be allowed to such an extent as to interfere with the introduction of species suitable for small timber, fuel, minor forest produce, manure leaf and so on, according to whatever may be the more immediate "objects of management" in the forest.

4. The question arose originally, I gather, in connection with the forests in Orissa where scarcity of grazing is acute, apparently, during the monsoon, owing to flooding of the forest floor ; this problem is not a serious one in Madras.

5. In the arid tracts found in Guntur the lopping of Hardwickia binata, acha (Tamil) or Yepi (Telugu), for fodder, is common in the hot weather when all the grass has dried up, and the species referred to is, on the other hand, putting out a flush of green leaves. Arrangements are made in the working plan for these forests by which such lopping is controlled so that the harm done to the tree growth is minimised.

6. Outside the Reserved Forests along certain canal banks and other irrigation sources the Public Works Department could with advantage plant fodder trees as this would serve to consolidate banks of streams and prevent erosion where it is dangerous, and would also provide food for local cattle.

7. Among forest trees of which the leaves are acceptable to cattle and which grow in the Madras Presidency the following are common :—

Hardwickia binata (acha or Yepi).
Dalbergia latifolia (Rosewood or Itti).
Albizzia amara.
Albizzia Lebbek.
Santalum album (Sandal).
Azadirachta indica.
Bambusa arundinacea (bamboo).
Pterocarpus marsupium (vengai).
Pterocarpus santalinus (red sanders).
Tamarindus indica (tamarind).

This is by no means an exhaustive list, and there must be many more trees of which cattle will eat the leaves. They rarely, however, will feed on such fodder if grazing is available.

NOTE ON FODDER TREES BY MR. J. A. WILSON.

It is only recently that the possibility of utilizing trees as producers of 'fodder' has been emphasized in Madras as a matter of general importance in the dry districts, and the knowledge of Forest Officers on the general question is decidedly meagre.

In one or two districts we have hitherto recognised a problem of local importance only and have dealt with it on that basis, *e.g.*, in Guntur we have catered for removal of leaves of *Hardwickia binata* [yepi (Tel.) Acha (Tam.)] in times of fodder scarcity and years of exceptional drought on a permit system for a considerable time.

We have now to meet a new presentation of the subject with changing times and ideas.

The period of fodder shortage in the dry districts runs usually from April to July. by which time the position begins to ease as the new crops develop with the rains of the S. W. Monsoon. The cattle feed largely on roughages with little nourishment in them from February onwards. As the roughages gradually decrease the position becomes increasingly difficult. Tree crops however develop a new flush of leaves usually during the hot weather from March onwards and it is a common sight to see them being lopped to feed herds of semi-starved cattle until the thunder showers that herald the approach of the S. W. monsoon break and produce a flush of early grass.

Forest Officers have always deplored this lopping inside reserved forests, and in fact where lopping is done indiscriminately and repeatedly it can have no other result than the ultimate ruin of the trees affected. Hence our unaminous condemnation of it. Unrestricted lopping has ruined thousands of acres of unreserves set apart for the exercise of communal privileges and has resulted in many areas in the virtual extinction of such privileges. This has in its turn created an outcry for disreservation in order to create new unreserves and during the past 20 years large areas have been disreserved to satisfy this outcry, always with the same result as devastation followed by a further outcry.

This obviously cannot go on. Madras has already called a halt. This is all very well, but there is a problem—a serious problem—to be faced.. The utilization of tree fodder—sometimes leaves, at other times fruits—is not new. In North India the leaves of shishan (Dalbergia sissoo) have been preserved successfully in silos on the Hissar Farm. We recently tried something similar with the leaves of lantana in North Salem, but this was a failure. Over a large part of India the pods of Babul (Acacia arabica) are cut and fed to herds of goats as they ripen, in Sind especially. In Madras we find the goat herd lopping margosa (Azadirachta indica), Tamarind (Tamarindus indica), Naga or Jaman (Eugenia Jambolana), Chigara or Unjal (Albizzia amara), Karuvelan (Albizzia lebbek), Veluvelan (Acacia leucophloea) and the like along road margins. They show a certain amount of preference for these species based on generations of experience.

Forest Officers also have further experiences of tree species specially susceptible to browsing by cattle and deer. To mention a few cases I quote Rosewood (Dalbergia latifolia). Albizzia amara and lebberk, Bamboos in youth, Hardwickia binata, the two Pterocarpus santalinus and marsupium, Sandalwood (Santalum album), Bombax malabaricum, Eriodendron glaucum, Azadirachta indica. Poinciana elata.

In fact when we come to think of it there are quite a number of tree species that produce edible foliage. Of the feeding value of tree fodder I think I am correct in saying that we know nothing, and the same applies to methods of treatment calculated to produce the maximum of leaf from a given species. What many of us must have noticed however is that in the dry districts controlled lopping of some species is practised, *e.g.*, pongamia glabra, Cassia siamea, several species of Ficus, Eugenia jambolana, Azadirachta indica, the idea being the production of leaf manure for wet lands. And I would remark that these trees seem to retain their health and vitality. I have also seen sandal lopped systematically with beneficial results in areas where if allowed to grow without lopping it becomes stag-headed.

We are not therefore absolutely ignorant. During the past quinquennium the Kumri system has developed strongly in several districts in marginal forests for the production of fuel, small timber, manure leaf species, etc. I consider that this system—I prefer to call it agriforesty has a tremendous future before it, and that it is the obvious method for the systematic production of Fodder Trees.

It meets many demands in a land where pure agriculture has developed on lines which operate to the general disadvantage of the cattle population and more and more towards the production of cash crops such as Tobacco, Groundnut, and cotton.

Agri-Forestal operations are I feel the only real reply to the incessant demand for disreservation. Where these operations can be conducted with co-operation of the poorer ryots, progress can be fast.

Elsewhere where ryots refuse co-operation because they have not properly understood the system I am confident that departmental operations to demonstrate it will in most cases overcome opposition. I have already indicated the species which may be tried, namely those which we know to produce a palatable leaf or fruit given earlier in this note. I admit

that my list is not exhaustive but it gives an adequate number to select from as a beginning and we have considerable experience of how to deal with these species under dry district conditions and therefore know a good deal about their silviculture.

Having raised successful plantations by this method as a first step, the next step will be the development of the exploitation technique. This cannot be for some ten years at least. Whether we shall find it best to lop systematically for fodder to be fed green, or to develop silage cannot be dealt with now. They are problems of the future.

On a question of the immediate work to be done, I do not consider here is good scope for an original scheme of research to go to the I. C. A. R. It is my opinion that we already know the general methods of conduct of agri-forestal operations and can proceed straightway to the business in hand on a limited scale. It is merely a matter of getting funds for the work in areas where it has to be done departmentally. Properly done, expenditure is recouped rapidly on the agricultural crops of the first two years. Should a third year of cropping be possible the system becomes a most lucrative one.

The general outline of the type of operation proposed is to clear areas of scrub jungle on reasonably good soil and raise field crops on them, introducing tree species in lines 20-30′ apart in the first year. Cultivate field crops until either the tree crop has progressed to such a stage that it unduly restricts the area available for cultivation or the field crop no longer pays due to exhaustation of the soil, for we cannot manure. Then put the area down to grass sown in mixture with the last field crop, and work the area as a true pasture for a period of years. The grass will build up the soil again and if tree species are chosen judicially will thrive under their cover.

Once the scheme is working properly areas put down to grass will be gradually formed into special rotational grazing blocks and equivalent new areas will be taken for conversion into orderly plantations.

It therefore suggest that if Government want this question proceeded with it can be easily correlated with our Kumri work in dry districts without the delay that would undoubtedly arise from sending up a scheme to the I. C. A. R. and awaiting sanction and allotment of funds.

The Provincial Silviculturist has this year started kumri experiments at Emmanur and the results of this investigation will be awaited by many interested in agri-forestry. When we have fodder trees old enough for treatment also he will be the obvious man to investigate in detail the most suitable methods of exploitation.

II.—Lopping in the Punjab by the Director, Anti-Erosion Circle, Punjab.

In the Punjab lopping trees and bushes for fodder is mainly confined to hill and *barani* tracts.

In both tracts the number of cattle kept by the villagers is excessive; cultivation is poor or insufficient for the people to live on, hence they keep cattle to supplement their means of living. The cultivation is insufficient to supply fodder requirements and shamilat or forest grazing has deteriorated to such an extent, as a result of over utilisation, that it provides

little sustenance. Both grass and straw fodder is improved by the addition of loppings from numerous species of trees and bushes and no doubt the practice of lopping trees is of old origin. But the increasing pressure on the land, both agricultural and pastoral, has more and more focussed the attention of the zamindar on to tree fodder. This, combined with wasteful methods of feeding and the retention of large numbers of unthrifty animals, particularly where the population is mainly Hindu, has resulted in a rapid destruction of valuable fodder-producing tree growth throughout the hill and *barani* tracts of the Punjab. Shamilat lands have suffered worst, but even in Government forest, where lopping is supposed to be regulated by settlement rules, it has been found impossible to enforce the rules in the face of the determination of the villager to get what he can out of the forest while there is still something left.

Many zamindars, both in the hills and the plains, cultivate fodder trees round the *abadi*, but to a very inadequate degree. So insistent is the insane desire to cultivate land no matter how poor it may be that huge areas of margin lands which could produce useful tree growth are put under field crops which are too often valueless. The ubiquitous goat is another reason for the scarcity of fodder trees in the plains, as well as in the hills.

The chief causes, then, of the disappearance or absence of fodder trees in the Punjab are :—

(i) Excessive numbers of cattle, which directly reduce the grazing potentiality of grazing lands and increase the demand for lopping.

(ii) The presence of large numbers of buffaloes in the hills.

(iii) The almost universal absence of pasture management, which is a corollary of (i).

(iv) The absence of system of rotational lopping, also a corollary of (i).

(v) Faulty methods of feeding cattle, including insufficient stall-feeding.

(vi) Misuse of land.

As regards remedies, in the hills it is unlikely that very much can be done as long as the existing heavy incidence of cattle on the land prevails. It is questionable whether the stock remedies suggested, *i.e.*, education of the villager and grading up cattle, will have taken effect before the destruction of tree fodder supplies is complete. The remedies are obvious, enforced rotational closure to grazing and lopping and the elimination of the buffalo from the hills.

In the hills settlement rights preclude the possibility of carrying out these measures.

Rotational lopping closures on a voluntary basis have been suggested and tried, but have always been violently opposed by the villagers, usually on the grounds that fractional closures reduce supplies below requirements.

The Punjab Government have agreed in principle to the formation of village forests in Kangra district, where the lopping situation is acute, partly in the hope that the villagers will, when they control the forests themselves, be imbued with a sense of responsibility for the protection of

their own forests. Whatever the result may be, the fact must be faced that there seems little hope of any substantial improvement in the hills as long as the cattle incidence is so heavy. It may be possible to persuade individual landlords to plant more fodder trees round their *abadis* (Government nurseries will be formed for the purpose of supplying trees free), but little else seems possible until something like a mental revolution is brought about in the hill population.

In the plains, where shamilat is small or non-existent, the problem can be tackled in two ways ; first by persuading villagers to plant fodder trees on the borders of their fields and round the *abadis* ; second, by getting them to give up cultivating land unfit for field crops and to grow trees on it.

Both these courses are being followed by Anti-Erosion Circle Officers in conjunction with the Co-operative Department ; nurseries are being laid out and schemes prepared while propaganda is being carried on from village to village.

III.—*A short note on the problem of fodder trees as it exists in this province, by the Director of Agriculture, Punjab.*

The question of planting trees for fuel and fodder has been engaging the attention of the Standing Provincial Fodder and Grazing Committee for some time now. The matter was discussed in its various Sub-Committees and the advice of the Forest Department obtained on the matter. In the canal irrigated areas of the Punjab there is usually no shortage of fodder at any time of the year ; hence the importance of fodder trees is negligible. Whatever trees are planted are mainly used for timber, shade and fuel. A discussion on this matter revealed that the zamindars could not be induced to plant more trees in their holdings on account of the damage by tree roots to the crops.

In the barani areas, however, fodder shortage is of very frequent occurrence. In years when rains fail very severe, famines set in. Fodder trees can be very useful in these areas, but their planting and growth is limited by the availability of water. In years of good rainfall, trees can be planted, but as they require watering at least for the first few years of their life their success is doubtful if rainfall is too scanty. The only trees that can succeed in such tracts are *Kikar, Jand, Ber* or *Mesquite*. The wild *Jhar beri* or *Mallah* is found in these arid regions and is used by the cultivators as a source of fodder. The branches of the bush are lopped off and stacked on the ground to dry. Later the heap is beaten with sticks when the dry leaves drop off and are fed to cattle. Mesquite can also succeed in these tracts.

In the hilly tracts there is very little cultivation of fodder crops and the zamindars depend for their supply of fodder from the forest areas. The cattle are let out to graze during summer and grass is cut and dried for use in winter. In addition, tree loppings also play an important role in the fodder supply.

The attached statement gives the names of the various trees which provide good fodder and are relished by cattle. With effort almost all the trees mentioned under A and C can be grown in barani areas. During the present fodder famine in the south-east of the province all sorts of trees have been used as cattle feed.

Good Fodder Trees.

	Local name.	Scientific name.	Remarks.
	Barani area trees.		
	Kikar	Acacia arabica.	
	Phulai	Acacia modesta.	
A.	Jand	Prosopis spicigera.	
	Nimbar	Not known.	
	Ber	Zizyphus Jujuba.	
	Ber wild bush	Zizyphus Jujuba.	.. Provide good feed for both milch and draught animals.
	Phog	Not known.	
	Pipal	Fisus religeosa.	
	Desert area trees.		
	Kangra	Not known ..	
	Salar	Not known ..	
B.	Hongon	Not known ..	.. Good fodder trees of Bagar area, grow well on sand dunes.
	Hindok	Not known ..	
	Pelwani	Not known ..	
	Irrigated area.		
	Kikar	Acacia arabica ..	.. Provide excellent fodder for draught and milch animals.
	Phulai	Acacia modesta.	
	Pipal	Ficus religeosa.	
	Ber	Zizyphus Jujuba.	
C.	Ber (Wild bush)	Do.	
	Jand	Prosopis spicigera.	
	Nimber	Not known.	
	Sirsa	Do.	
	Imli	Taramirindus Indica.	

Inferior fodder trees fed during years of scarcity only.

	Local name.	Scientific name.	Remarks.
	Shisham	Dalbergia Sino.	
	Jaman	Engenia Jambolena.	
D.	Jamua	Do. ..	.. Goats and camel relish most of these.
	Mango	Mangeberus Indica.	
	Nim	Melia sp.	
	Dharak	Melia azadrakhta.	
	Kaidau	Not known.	
	Mulberry	Do.	
	Khirni	Averhoa bilimbi.	
	Lasura	Cordia Myxa.	
	Baran	Cortavia religiosa.	
	Gular	Ficus species.	
	Jal	Salvadora clecides.	
	Karil	Caparis sp.	

APPENDIX LVI.

Note on Subject No. 30 (b) :—Note by the Agricultural Commissioner with the Government of India on the present position and future requirements of Anti-Erosion Work in India.

The attached note by the Agricultural Commissioner with the Government of India on the present position and future requirements of soil conservation work in India is for the consideration of the Board. The note will first be considered by the Central Fodder and Grazing and the Soil Science Committees whose reports will be circulated to the Board in due course.

NOTE BY THE AGRICULTURAL COMMISSIONER WITH THE GOVERNMENT OF INDIA ON THE PRESENT POSITION AND FUTURE REQUIREMENTS OF ANTI-EROSION WORK IN INDIA.

[This note is to go to the

(1) Central Fodder and Grazing Committee,

(2) Soil Science Committee.

(3) Crops and Soils Wing of the Board of Agriculture.]

The subject of this note has already been thoroughly dealt with by Dr. Maclagan Gorrie in his lecture on the " Problem of soil erosion in the British Empire with special reference to India " delivered before the Royal Society of Arts on May 3rd, 1938, and published in the Journal of that Society, July 29th, 1938, p. 902. A summary of this article appears in ' Nature ', September 24th, 1938, p. 560-561 entitled " Soil Erosion in India ". Why then trouble with still another note ? The idea is briefly—

(1) to re-state what our own problems are.

(2) to indicate how far we are on the way to solve them, and

(3) to consider what further action is required.

This note is deliberately made brief as the subject will be taken up in no less than three consultative bodies, meeting about the same time, *i.e.*, the Central Fodder and Grazing Committee, the Soil Science Committee of the Advisory Board, Imperial Council of Agricultural Research and the Crops and Soils Wing of the Board of Agriculture.

First, what are our own problems ? There are several ways of classifying these one being to divide them into

(1) problems of cultivated land,

(2) problems of grassland, and

(3) problems of forest.

They are all inter-connected and have also got a bearing on other problems such as silting up of rivers, canals and tanks, and flooding.

The problems might equally well be divided according to the different types of erosion, *e.g.*, sheet, gully, etc., or according to slope, altitude and rainfall, or according to geographical and political boundaries. Let us for the present stick to the first mentioned classification, *i.e.*, erosion problems of cultivated land, grassland and forest of these, the last named have received by far the greatest amount of attention and particularly in

the foot hills of the Himalayas where erosion has been rapid, widespread and disastrous. The application of successful anti-erosion measures has been done on a more or less experimental scale, and particularly at Hoshiarpur and what seems to be required is the extension of such measures over a very big area. Grassland erosion has received attention again particularly by the Forest Department and particularly in the Punjab, Central Provinces and Bombay. Anti-erosion measures for cultivated land have for a long time been the particular work of the so-called Bunding Officers belonging to the Agricultural Department in the Centre and South of the Bombay Province. In that Province there has been considerable experimentation with different types of bunds and waste weirs for different slopes, different types of cultivation and different purposes. A fair amount of data on cost and designs of bunds and waste weirs are available. In the Nasik district of the same Province a certain amount of work has been done in making contour bunds by means of a tractor on long gentle slopes. Recent indications are that Bombay is definitely becoming anti-erosion minded and that such measures will bulk largely in all rural development schemes.

Some of the more recent developments of soil conservation devised in America such as strip cropping have not yet been tried out in this country. There is no doubt that India has much to learn from soil conservation work in America both as regards technique and organisation. The legislation, particularly the Soil Conservation Act and the recent Standard Act for the creation of soil conservation districts deserve particular study. The working of the Civilian Conservation Camps is a striking example of how to use spare manpower. The collaboration of the Federal Government, the State Governments and private landowners in the United States of America has a definite lesson for a large country like India also composed of several Provinces and States with a Central Government.

While information on all these points can be obtained by reading, there is no doubt that by far the greatest good to India would result from the deputation to America of someone who could see on the spot the working of the soil conservation measures and bring back to India the information and the inspiration required. There has been no such visitor since Dr. Maclagan Gorrie went to America and Canada on a short tour which resulted in his book. "The Use and Misuse of Land" published by the Oxford University Press............ At that time the Soil Conservation Service, as it now is, did not exist. Its embryonic form, the Soil Erosion Board, was then functioning. A study of the whole of the development since that time is well worth while, and I am sure that plans, estimates, photographs and personal experience would all be available for any properly recommended officer sent on special duty for this purpose.

In the midst of war it may be impossible to attempt such a deputation but it is a proposal regarding which we can express an opinion and register a decision for future action.

APPENDIX LVII.

Note on Subject No. 23 :—Technical Programme for the extension period of the Scheme for Research on insect pests of sugarcane at the Imperial Agricultural Research Institute, New Delhi.

The attached technical programme is for consideration by the Advisory Board. The programme will first be considered by the Entomological and Pathological Committee and the report of the Committee will be placed before the Board thereafter.

IMPERIAL AGRICULTURAL RESEARCH INSTITUTE, NEW DELHI.

Scheme for Research of Insect Pests of Sugarcane. Technical Programme for the extension period from December 1939 to November 1942.

The programme guiding the work of the scheme since December 1936 has been the one laid down by the Entomologists' Committee of 15th February 1936 and detailed below—

(a) Observations by Field Entomologists on the major pests in the areas in which they are working. These areas will be
  (i) Delhi-Karnal,
  (ii) Pusa, and
  (iii) Coimbatore.

  One Assistant and one Fieldman will be required for this work in each of these areas.

(b) The collection of parasites and of information regarding local parasites and the forwarding of specimens to the central station will also be carried out at the sub-stations enumerated above. For this purpose the Committee defined major pests as all borers, Pyrilla and White Fly.

(c) The duties of the Parasitologist will be mainly the investigation of indigenous parasites of the major pests and the importation of promising exotic parasites and their trial. For this work the parasitologist will require one Assistant and two Fieldmen to assist him.

(d) The class II officer who is to be appointed at the Centre for systematic work should be sent for training in the systematics of parasitic Hymenoptera to Europe for two years.

(e) The Second Imperial Entomologist should collate all informations from out-stations and from the Provinces. The Second Imperial Entomologist would also carry out studies on the bionomics of pests and arrange for such work to be carried out at sub-stations, if necessary.

2. It was agreed that all Provincial and State Entomologists would supply to the Second Entomologist

(a) a complete set of published papers on sugarcane pests.

(b) a complete technical statement of work in progress and of important unpublished results. This statement is supplied for the purpose of enabling the Second Imperial Entomologist to prepare his programme, and for the information of all co-operating Entomologists but not for publication.

3. The scheme has now received sanction for extension for three years from December 1939 and in drawing up a programme, the following points have to be considered :—

(a) As a result of work done in the central sugarcane pests research scheme it is now known that the main pests of sugarcane are the Top-borer, *Scirpophaga nivella* F., the three stem borers, *Argyria sticticraspis* Hmpsn., *Diatraea auricilia* Dudgn., and *Diatraea venosata* Wlk., the root borer, *Ammalocera depressella* Swinh., and the sugarcane leaf hopper, *Pyrilla* spp., and the white fly *Aleurolobus barodensis Mask.*

(b) Recent observations by me have shown that the two pink stem borers, *Sesamia uniformis* Dudgn., and *Sesamia inferens* Wlk., and the new Pyralid, *Chilo trypetis* Bisset, are rather serious pests too. *Chilo trypetis* Bisset, the stem breaker borer, also known as the new Pyralid borer, first studied in Gurdaspur, is, I have found, extending itself over a wide area comprising Jammu State, Sialkot, Gurdaspur and Amritsar districts in the Punjab and the Dehra Dun region in United Provinces. This caterpillar rings the stem in which it bores and causes it to break. It seems to migrate from one stem to another ringing and killing each stem it attacks.

(c) Work done so far by me in the Central Sugarcane Pests Research Scheme of the Imperial Council of Agricultural Research has given results to indicate that sugarcane varieties with very hard midribs will resist the top-borer pest. It is now for sugarcane breeders to evolve new varieties with this characteristic as a definite factor.

(d) The field distribution of large numbers of the *Trichogramma* parasite in Orissa and North Bihar has resulted in considerable lessening of attack by the chief stem borers and by the root-borer in the experimental plots.

(e) About Pyrilla, experiments and study have shown that the pest is very serious about once in three or four years and it could be controlled by early vigilant efforts at bagging, destruction of egg-masses, spraying the young affected crop with a mixture of one ounce kerosine oil and one ounce soap in one gallon of water and later in the season, if necessary, by the stripping of the lower leaves in maturing canes. Parasite and predator introductions also give good results.

4. Regarding the future Technical programme the following is suggested—

(a) Observations on the major pests at

(i) Delhi-Karnal.

(ii) Pusa, and

(iii) Coimbatore.

(b) The collection of natural enemies of sugarcane pests and all information about them at the central station and sub-stations.

(c) The Biological Control Research Officer will study the natural enemies of the major pests and will experiment with indigenous and exotic parasites and predators.

(d) The Second Entomologist (Dipterist) will study the bionomics of pests.

(e) The Second Entomologist (Dipterist) will, with the co-operation of all Entomologists working on sugarcane in India, prepare an annual summary of the work done in India on sugarcane pests.

APPENDIX LVIII.

Note on Subject No. 83-A. :—Technical Programme of Pyrilla work under the United Provinces insects pests of Sugar-cane Scheme.

The attached technical programme is for consideration by the Advisory Board. The programme will first be placed before the Entomological and Pathological Committee and the remarks thereof submitted to the Advisory Board.

TECHNICAL PROGRAMME OF WORK.

1. To enquire into the causes underlying pyrilla outbreaks.

2. Co-relation of pyrilla incidence with climate and cultural practices.

3. Causes underlying differences in the phases of pests at short distances.

4. To study the bionomics of the natural enemies of pyrilla and try out the possibilities of biological control.

5. Study of the varietal susceptibilities and their underlined causes.

6. What part chemical and physical properties of the soil play in increasing or decreasing the damage.

7. Due to a very limited sum at our disposal, the information on Pyrilla incidence will be regularly collected from the following places in the Meerut and Muzaffarnagar districts :—

(i) Meerut.
(ii) Daurala.
(iii) Mansurpur.
(iv) Muzaffarnagar.
(v) Shamli.

APPENDIX LIX.

Note on Subject No. 23-B :—Technical Programme of Pyrilla work under the Punjab insects pests of Sugarcane Scheme.

The attached technical programme is for consideration by the Advisory Board. The programme will first be placed before the Entomological and Pathological Committee and the remarks thereof submitted to the Advisory Board.

TECHNICAL PROGRAMME FOR PYRILLA WORK.

1. Survey of *Pyrilla* in the important sugarcane growing tracts of the Punjab.

2. Ecological studies on the life-history of *Pyrilla* with a view to find out factors which cause fluctuations in its population.

3. Varietal susceptibility of (newly evolved) different varieties of sugarcane to *Pyrilla* attack with a view to find out characters which enable the plant to resist the attack.

4. Effect on the multiplication of the pest, of the time of sowing and spacing of the crop, and the number of waterings given to it.

5. Chemical, mechanical and cultural control operations against the pest with a view to evolve new methods.

6. Observations on the distribution, bionomics, seasonal fluctuations and alternative hosts of the most important parasites. An attempt will also be made to evolve a technique for the mass breeding of the parasites.

APPENDIX LX.

Note on Subject No. 24 (a) : Application from the Government of Madras for a grant of Rs. 54,104 spread over five years for a Scheme of Research on Phytophthora diseases.

An application from the Government of Madras for research on Phytophthora sp. is appended (Annexure). The diseases are said to cause heavy loss as some of the hosts form the major money crops of South India. The proposal involves so far as the Council is concerned a grant of Rs. 54,104 spread over five years. The Provincial Government will give facilities in the form of lands, equipments, etc.

2. The scheme will first be considered by the Entomological and Pathological Sub-Committee whose report will be submitted in due course.

ANNEXURE.

COPY OF LETTER NO. 6021-III|39-3, DATED THE 28TH APRIL 1939, FROM THE SECRETARY TO THE GOVERNMENT OF MADRAS, DEVELOPMENT DEPARTMENT, TO THE SECRETARY, IMPERIAL COUNCIL OF AGRICULTURAL RESEARCH, NEW DELHI.

SUBJECT :—*Scheme of research on Phytophthora diseases.*

I am directed to forward for the consideration of the Imperial Council of Agricultural Research a scheme prepared by the Director of Agriculture, Madras, for research on Phytophthora diseases of the major economic crops of South India. The scheme is of all-India importance involving more than one Province besides the States of Mysore, Travancore and Cochin and is to be worked for a period of five years without any commitment to the Council by way of pension or any other permanent liability. All avenues of co-operation will be explored in carrying out the scheme of research and in fact the Government Mycologist is already in touch with the Mycologists of Bombay, Mysore and Travancore. The total estimated cost of the scheme is Rs. 54,104 and is intended for equipment and staff only, but not for any land or buildings. As the research work is proposed to be conducted in Coimbatore, the laboratory, the potculture house in the Research Institute and a few plots of land in the Central Farm for such of those field trials as can be conducted locally will be utilised for the scheme. The grant is not asked in relief of normal provincial expenditure. His Excellency the Governor hopes that the Council will give a full grant as it is not possible to tackle, with the available staff and resources, these researches involving a number of species of a genus occurring on diverse hosts.

The nature of the research work proposed requires an experienced and capable officer who possesses the ability to initiate, organise and execute the scheme to a successful conclusion and he should be able to give proper guidance to the staff and clerically analyse the data obtained. The post of a Gazetted Assistant has therefore been provided for in the scheme. As field experiments have to be carried out at least in four different places in the province, it is necessary to post a fieldman to each place to keep record of the routine observations. Two Assistants are required, one to attend to field experiments and the other to help in the laboratory. Four fieldmen and two Assistants have accordingly been included in the estimate of

cost for the scheme. The Provincial Research Council has not been consulted.

150 copies of the scheme will be forwarded to the Council in due course.

SCHEME OF RESEARCH ON THE IMPORTANT PHYTOPHTHORA DISEASES OF THE MAJOR ECONOMIC CROPS OF SOUTH INDIA.

The importance of the Phytophthora diseases of crops in South India.

The genus Phytophthora has a wide geographic distribution and attacks families widely different from each other. Some species like *P. parasitica* are omnivorous invading representatives of several families. The following list gives the more important Phytophthora diseases of crops in India :—

Species of Phytophthora.	*Host.*	*Nature of injury.*	*Distribution.*
Phytophthora Meadii ..	Hevea rubber ..	Abnormal leaf fall, bark canker and fruit-rot.	Madras, Travancore, Cochin and Coorg.
Phytophthora arecae ..	Betelnut palm and coconut palm.	Fruit-rot and bud-rot of areca, fruit-fall of coconut.	Madras, Mysore, Cochin, Travancore and Bombay.
Phytophthora palmivore ..	Coconut and palmyra palms.	Bud-rot ..	Madras, Cochin and Travancore.
Phytophthora sp. ..	Betel vine ..	Wilt and collar-rot	Madras, Central Provinces and Bengal.
Phytophthora sp. ..	Oranges	Leaf fall, fruit-rot and stem canker.	Madras, Mysore and Coorg.
Phytophthora parasitica var. nicotianæ.	Tobacco ..	Collar-rot and wilt	Madras.

Every one of the diseases above causes considerable loss as these form some of the major money crops of South India.

The importance of the research to India.

Phytophthora disease of Hevea rubber.—All the Hevea rubber plantations in India lie in South India. Madras, Coorg and the States of Mysore, Travancore and Cochin have a total area of 120,000 acres. Hevea rubber plantations along with those of tea and coffee constitute the chief sources of revenue of the European and Indian planters of South India. McRae* has recorded 30 to 40 lb. as the average loss per acre, which works out at Rs. 15 to Rs. 20 per acre. Thus the loss to the industry is very considerable.

Fruit-rot of betelnut palm.—There are about one lakh and fifty thousand acres in Madras, Malabar and South Kanara alone contributing about 100,000 acres and Mysore about 40,000 acres. The loss on account of the Phytophthora disease has varied from 5 to 100 per cent. The disease also causes serious loss in the North Kanara district of the Bombay Presidency. The Mysore Department have also recorded that the areca Phytophthora is found on a number of wild plants.

---

* MacRae, W. *Phytophthora Meadii* n. sp. on Hevea Brasiliensis Memoirs of the Department of Agriculture in India, Bot. Series IX, 1917-18.

Bud-rot of palmyra and coconut palms.—A large number of palmyra palms are lost every year on account of the Phytophthora bud-rot about 100,000 being diseased in 1908 in Godavari. The same fungus attacks coconut and causes bud-rot. The gain on account of treatment of partially affected trees alone has been estimated to be over 4 lakhs of rupees.*

Phytophthora disease of oranges.—The disease has just been recorded in Wynaad, an important orange centre of Malabar district and has caused considerable loss. The trees are defoliated. the fruits are shed and the trunk get gaping cankerous wounds. It is reported that the disease is prevalent in the orange areas of Coorg and Mysore as conditions favourable for the organisms are found in these places also. *Phytophthora palmivora* causes damage to citrus in Bombay Presidency also. *Phytophthora citrophthora* was investigated and found to be a serious disease of oranges causing gummosis and collar-rot in Florida and California.

Betel vine wilt.—This disease has been found to cause considerable damage in Madras as well as in the Central Provinces and Bengal. There are over 31,000 acres under betel vine in this Presidency.

Tobacco wilt.—Phytophthora wilt of tobacco has been found to occur in a serious form in the Vizagapatam and Salem districts of this Presidency. Vizagapatam has 52,000 acres and Salem about 5,000. In some gardens the disease has been found to be as high as 45 per cent. The area under tobacco in Madras Presidency alone is over 253,000 acres.

The above facts show the important nature of the crops and the severity of the Phytophthora diseases of these crops.

The following detailed programme of research is proposed to be carried out within a period of five years.

Comparative investigation on P. arecae, P. Meadii and P. palmivora.—As mentioned above the Phytophthora causing hevea disease was described by McRae as *P. Meadii* (McRae, w. *Phytophthora Meadii* n.sp. on Hevea Brasiliensis : Memoirs of the Department of Agriculture in India, Bot. Ser. IX, 1917-18). The disease on palmyra and coconut palms is attributed to *P. palmivora* and that of areca palm ascribed to *P. arecae*.†

Tucker‡ says that morphologically these species are indistinguishable from one another and should be included under *Phytophthora palmivora*. Under actual field conditions, however, it is found, in areas having virulent attacks of areca palm disease, the bud-rot disease of coconuts or palmyras has not been found. The bud-rot of these palms are also not evident in areas where hevea is virulently attacked. If as is contended that all these should be classed as a single species, knowledge as to the specialization of these strains is lacking. To elucidate all these points, comparative studies will be carried out.

---

*MacRae, W.: The operations against bud-rot of palms in South India. Memoirs of the Department of Agriculture in India, Bot. Series XII, 1922.

†1. Butler, E. J., Mem. Dep. Agr. India Bot. Ser. I, 1907.

2. Coleman, L. C., Dep. Agr. Mysore, Myc. Ser. Bull. 2, 1910.

3. Pethybridge, G. H., Sci. Proc. Roy. Dublin Soc. U. S. 13, 1913.

‡4. Tucker, C. M. Taxonomy of the genus Phytophthora—Missouri Agr. Expt. Stn. Res. Bull. 153, 1931.

Field experiments for the control will be carried on the following lines :—

(1) *Areca.*—Trial of different fungicides for the control of Areca Phytophthora. Recent trials in Coimbatore and Mysore have shown that there is considerable room for the reduction of the cost in adhesives and in labour.

(2) Determination of the efficiency of various types of sprayers suitable for areca spraying.

Hevea.—Abnormal leaf fall is now controlled by Bordeaux spray. It is necessary to try dusting as this will solve the problem of water scarcity during the hot weather months preceding the monsoon when the protective application of fungicide is necessary. The successful use of sulphur dusts for the control of *Oidium heveae* in Malaya and other countries show that dusting rubber trees is within practical politics.

Investigation of the Phytophthora sp. on oranges.—As this is the first record of a Phytophthora doing considerable damage to loose jacket oranges in South India and as the organism has just been isolated, complete life history of the fungus will be studied and its systematic position determined. Preliminary inoculations have shown that the tight jacket oranges such as the Washington Naval are also susceptible.

Field experiments.—Spraying with Bordeaux mixture is reported to have controlled the disease. Experimental data however are lacking as no spraying was ever conducted on an experimental scale. Experiments will therefore be laid out as to how far spraying is successful in the control of the disease and also as to the relative merits of the various fungicide and adhesives. Dusting also will be compared with spraying.

Investigation of the Phytophthora wilt of betel vine.—The organism causing this disease is said to be a strain of *Phytophthora parasitica* though a similar organism in Malay States was determined as *Phytophthora colocasioe* (*Thompson* : Malayan Agr. Jour. XVII, 1929). A detailed comparative study of this organism is necessary. As this organism causes wilt, a special study as to the prevalence of any toxin production by the fungus will also be studied.

Field experiments will also be laid out for the control of the disease. The disease is reported to have been checked by application of Bordeaux mixture in Central Provinces and Burma.

Phytophthora wilt of tobacco.—Tucker has classified this organism as a variety of *Phytophthora parasitica.*

Laboratory studies.—

(1) Toxin production in cultures.

(2) Varietal susceptibility. This study is very essential as there is no knowledge of the resistance of Indian varieties to this fungus.

Field experiments for the control of the disease is also necessary. Preliminary trials have shown that the incidence of the disease can be considerably reduced by soil treatment with Bordeaux mixture. Raciborski's soil treatment and Bouisol are also recommended. Experimental details are however lacking.

Facilities in Madras for research work on the important Phytophthora disease.—Coimbatore is ideally situated for the study of these diseases as the place is within easy reach of rubber plantations, areca, coconut, orange, betel vine and tobacco areas where these diseases are prevalent.

A well-equipped mycological laboratory of 28 years standing with water, gas and electric equipment exists at the Agricultural Research Institute, Coimbatore. A differential temperature cabinet is also available for temperature studies. Research officers in other branches of agricultural sciences like entomology, bio-chemistry, bacteriology are also available for consultation.

A well-equipped pot culture house and a green house are also attached to the mycological laboratory. A stock of cultures including the several Phytophthoras isolated from the respective hosts is maintained.

Library facilities.—The library at the Coimbatore Agricultural Research Institute is well-stocked with old and new literatures on all agricultural subjects.

Financial aspect.—Though the scheme of research outlined above appears very elaborate, it is proposed to carry it out within a grant of about Rs. 10,000 per year for five years. This is possible because Coimbatore is very centrally situated for tackling these diseases and because of the availability of the facilities and equipments outlined above. The saving on account of equipments already available may amount to about Rs. 5,000 a year besides a non-recurring expenditure of about Rs. 10,000 during the first year for lease of land, petty construction, etc., which would otherwise have to be incurred if the experiment is to be conducted any where else than in Coimbatore. The following tabular statement gives the staff and expenditure necessary for carrying out the work as outlined :—

Post and scale.	First year.	Second year.	Third year.	Fourth year.	Fifth year.
	Rs.	Rs.	Rs.	Rs.	Rs.
1 Assistant Mycologist on Rs. 270 in the scale of (Rs. 190—25/2—240—30/2—480—40/2—560).	3,240	3,240	3,600	3,600	3,960
2 Assistants, Rs. 75—7½/2—105	1,800	1,800	1,980	1,980	2,160
4 Fieldmen, Rs. 30—3/2—48 ..	1,440	1,440	1,584	1,584	1,728
1 Laboratory attendant, Rs. 19——2/2—33.	228	228	252	252	276
1 Peon, Rs. 12—17	144	144	144	144	156
Travelling allowance	1,000	1,000	1,000	1,000	1,000
Apparatus, materials and contingencies.	1,000	1,000	1,000	1,000	1,000
Cultivation, manures, chemicals, implements, etc.	1,400	1,400	1,400	1,400	1,400
Total ..	10,252	10,252	10,960	10,960	11,680

	Rs.
Total for five years	54,104

APPENDIX LXI.

Supplementary Note on Subject No. 24 (a) :—Application from the Government of Madras for a grant of Rs. 54,104 spread over five years for a scheme of research on the important Phytophthora Diseases of the Major Economic Crops of South India.

In continuation of the note dated the 28th July 1939, the following papers are circulated :—

(i) a summary of the observations on the scheme made by the mycologists in Bombay, Mysore, Central Provinces and Berar, Travancore and Cochin. (Annexure I.)

(ii) Extracts from a letter from the Economic Botanist to the Government of Bengal. (Annexure II.)

ANNEXURE I.

SUMMARY (PREPARED BY THE ASSISTANT AGRICULTURAL EXPERT) OF THE OBSERVATIONS MADE BY OTHER MYCOLOGISTS ON THE SCHEME OF RESEARCH ON PHYTOPHTHORA DISEASES IN MADRAS.

Bombay.

The Plant Pathologist to the Government of Bombay has stated that in Bombay they are chiefly concerned with *Phytophthora* on arecanut, betal vine and oranges. The Government of Bombay have sanctioned special staff for the investigation of the Koleroga of betel nut and interesting results have already been achieved. The study of *Phytophthora* arecae in relation to *P. palmivora* and *P. meadii* is also being made. Regarding Phytophthora on oranges it is either *P. palmivora* as is found in Bombay and recorded in Indian Journal of Agricultural Science, 6, 1936, pages 803—822 or *P. Parasitica* but not *P. citrophthora* which is not known in tropical countries. A complete study of the disease and the fungus has already been made and there is really no other point on which further information is required. *Phytophthora* on betel vines has been found to cause a virulent wilt disease in Bassein near Bombay. In 1938 the Government of Bombay had appointed special staff for devising effective methods of control and a Bordeaux Mixture treatment was worked out as a remedy. The other two diseases, *i.e.*, Phytophthora on coconut palm and rubber are not found in Bombay and hence the Government are not interested in them.

Mysore State.

The disease on oranges is very severe and the one on betel vine is sporadic. Attention is being mainly concentrated on the study of spray mixtures. Recently trouble has been experienced with Phytophthora on pine apples, the cultivation of which is being extended in Mysore. The main problem is the control of the diseases on arecanut and orange and trials are being conducted with different types of machinery for spraying.

Central Provinces.

According to the opinion of the Mycologist to the Government of the Central Provinces, Nagpur, enough work has already been done on

Phytophthora disease of Havea rubber in Madras and on the fruit rot of areca palm in Mysore and Bombay. Phytophthora disease of orange and tobacco phytophthora disease are also not new problems and sufficient work has already been done on these diseases. The problem should be solved by the provincial department in the course of its normal functions and there is no case for support from the Imperial Council of Agricultural Research.

Travancore.

The Mycologist of Travancore states that species of Phytophthora do considerable damage to crops in Travancore.

The area under Havea rubber in Travancore is estimated to be one lakh of acres. Almost all these plantations suffer from secondary leaf-fall. The larger planters anticipate the attack and resort to protective Bordeaux sprays. The smaller holders do little to control this disease but suffer meekly the annual losses. Spraying to control this disease has been carried out during the hot weather before the monsoon breaks out. There is certain amount of water scarcity in the plantations in the hot months when spraying is given but dusting too has its own limitations. There is very little dew deposited on the plants during hot weather so as to enable the dust to stick to the surface. Secondly dusting has necessarily to to be limited to the early hours of the day to take advantage of whatever moisture there is on the plants whereas spraying can be done throughout the day. The application of any fungicide in the form of dust would no doubt be far more convenient and if effective would help very considerably to reduce the cost of production of rubber. The experience however with sulphur dusts even against Oidium has not been very encouraging and liquid sprays have been found to spread more evenly than the dusts. The problem of relative merits of liquid sprays and dusts is worth investigation.

Rubber bark canker has not been found to be serious in Travancore. Fruit-rot may be ignored but for the fact that infections on fallen fruits and leaves help the fungus to tide over adverse seasons. Spraying against leaf-fall is carried on just when the fruits set and sprayed plants produce fewer fruits than unsprayed trees. The liquid sprays may be instrumental in causing the prevention of setting of fruits.

There is no extensive plantation of Areca nuts alone in Travancore, although areca nut trees figure prominently along the banks of all the principal rivers in the State. The nut is important for local consumption and for export. Arecanut palms are known to suffer annually in some taluks from the attack of *Mahali-Phytophthora* fruit-rot. The loss of crop from this attack varies very considerably. Bordeaux spraying to control this disease has yet to become a regular practice with ryots. It is proposed to carry on the spraying campaigns more vigorously than hitherto-fore.

The proposed investigation on sprayers and different materials which may be used as adhesives, will be of very great value. The small 1½ gallon holder sprayers has been found to be the most convenient for work in Travancore. The scattered holdings provide little scope for power sprayers. Even the heavier hand sprayers do not find favour with the labourers who find it hard to carry up the trees the end of even a 50 feet

hose. The cheapest holder sprayer now in the market costs Rs. 25 to 30. The small holders find it too much to invest so much on a spraying machine. The problem is to evolve a cheaper machine for the ordinary cultivator.

Recent work on the use of coconut and other vegetable oils as adhesives also opens a vast field for careful investigation. Travancore produces and exports large quantities of these oils and oilseeds and they now sell very cheap. If they can be used successfully to replace resin soda and other adhesives the raw materials for which are imported at a very considerable cost that would help very much to reduce the cost of spraying. The proportion of oil to be added to the mixture and the right methods of adding the oil to secure maximum efficiency also deserves to be more thoroughly investigated.

Bud-rot of palmyra and coconut palms occurs in Travancore only sporadically. Palmyra palms are not very important here except in South Travancore and with coconut palms it is not practicable to carry on this type of investigation and treatment which is adopted against palmyra bud-rot in the east.

Oranges and tobacco are not important crops in Travancore. Betel vine is cultivated more extensively and the plants suffer from several diseases including wilts. No investigation has yet been carried on these wilts and it is therefore not possible to say whether any Phytophthora is involved. Information on this subject would be welcome.

Cochin State.

The Economic Botanist states that of the several plant diseases attacking crops in the State those caused by the Phytophthora species are doing the greatest damage. Crops like Hevea rubber, the palmyra and the areca and to a limited extent the coconut are paying a heavy toll year after year on account of Phytophthora diseases and hence any research work done on these diseases would be of value to the State. The betel vines are, however, free from disease and the oranges form an insignificant crop. Tobacco has not so far been a cultivated crop in the State. In one place, *i.e.*, the Nemmara firka, the three crops, *i.e.*, rubber, palmyra and areca are grown side by side and all the three are subject to Phytophthora disease. This observation is made as it goes against the statement made on page 3 of the scheme put up by the Madras Government. Work on different fungicides and sprayers leading to a reduction in the cost of spraying would be a welcome boon to the ryots especially on account of the abnormal fall in prices of arecanuts.

Coimbatore with its well equipped laboratory, its technical staff and proximity to the several crops to be dealt with is considered to be the most suitable centre in South India for investigating problems on Phytophthera.

ANNEXURE II.

EXTRACTS FROM LETTER D. No. 1582, DATED 31ST OCTOBER 1939, FROM THE ECONOMIC BOTANIST TO THE GOVERNMENT OF BENGAL, DACCA FARM.

* * * * * * *

Bengal.

The scheme is quite in order and the lines of investigation chalked out by you are quite to the point.

Below, I am embodying a short note on the Phytophthora diseases as to have hitherto been observed on various crops in Bengal.

Although Bengal conditions are in most part different from Madras yet I shall be glad to test the efficacy of the results of your investigations, under the conditions of this province on various crops which are attacked with Phytophthora.

Betelvine.—It is a very paying crop of Bengal and is seriously attacked with Phytophthora especially during the rains. The condition under which the crop is grown is ideal for the growth of the fungus. From the experiment which had been carried out in Bengal it is proved that the disease can be successfully checked in a pan-garden by systematic spraying with Bordeaux mixture.

Apart from control measures selection of resistant varieties are also under trial.

Palmyra palm.—Some years ago a survey was made and it was observed that the "Bud-rot" disease of palmyra palm exists in some of the districts of Bengal. Though at the present time this crop is not considered of importance, there is every chance for the cocoanut palm taking the infection which is a very important crop and is grown extensively in certain districts.

Betelnut palm.—There is an extensive cultivation of this crop also in certain districts but so far the attack of Phytophthora has not been reported, though in certain places bare stumps of this tree have been noticed.

A species of Thielaviopsis was isolated from diseased materials but so far the fungus has failed to take infection. It appears that the fungus was saprophytic.

Citrus.—The basal trunk of citrus trees has often been observed attacked with brown-rot gummosis.

The fruit-rot is also common during the rains and a species of Phytophthora has been isolated.

APPENDIX LXII.

Note on Subject No. 24 (b) :—Application from the Aligarh Muslim University for a grant of Rs. 5,108 spread over two years for conducting research on the Fundamentals of Biology of insect pests of important local crops together with the study of their parasites with bearing on their Biological control and for training post-Graduate Students.

The attached scheme (Annexure) from the Aligarh Muslim University for conducting research on the biology of insect pests of important local crops together with the study of their parasites with bearing on their biological control and for the training of post graduate students, which has been received through the Government of United Provinces, is for the consideration of the Board. The scheme involves an expenditure of Rs. 5,108 spread over two years (Recurring Rs. 3,408 and Non-recurring Rs. 1,700).

2. The scheme will first be examined by an *ad hoc* committee whose report will be circulated to the Board in due course.

ANNEXURE.

COPY OF LETTER NO. 3327-A/XIIA-690, DATED THE 1ST SEPTEMBER 1939, FROM THE DEPUTY SECRETARY TO GOVERNMENT, UNITED PROVINCES, LUCKNOW, TO THE SECRETARY, IMPERIAL COUNCIL OF AGRICULTURAL RESEARCH, NEW DELHI.

I am directed to forward for the consideration of the Imperial Council of Agricultural Research, a copy of an application for a total grant of Rs. 5,108 (Rs. 1,700 non-recurring, and Rs. 3,408 recurring spread over two years) for training post-graduates and for carrying on further research in Agricultural Entomology at the Muslim University, Aligarh (Enclosure). The Scheme has been revised in accordance with the resolution passed on the subject at the last meeting of the United Provinces Agricultural Research Committee, a copy of which is enclosed for your information. I am to request that the Scheme may now be placed before the Advisory Board for consideration at its next meeting.

COPY OF RESOLUTION NO. 8 PASSED IN THE 16TH MEETING OF THE U. P. AGRICULTURAL RESEARCH COMMITTEE, HELD AT THE COUNCIL HOUSE, LUCKNOW ON AUGUST 10, 1939.

Agenda.	Resolution.
8. Consideration of an application from Dr. M. B. Mirza, B.Sc., F.R.M.S., F.A.Sc., Chairman, Department of Zoology, Aligarh Muslim University, Aligarh, to the Imperial Council of Agricultural Research for a grant of Rs. 5,108 spread over 2 years for training post-graduate students and doing further research in Agricultural Entomology at the Muslim University, Aligarh.	8. Resolved that the scheme be recommended to the Imperial Council of Agricultural Research, after its revision in consultation with the Director of Agriculture.

ENCLOSURE.

An application from the Aligarh Muslim University, to the Imperial Council of Agricultural Research, for a total grant of Rs. 5,108 (Rs. 1,700 non-recurring and Rs. 3,408 recurring spread over two years) for conducting research on the fundamentals of biology of insect pests of important local crops together with the study of their parasites and the essential features of their parasitism with bearing on the biological control; coupled with the training of post-graduate students in Agricultural Entomology.

Introduction.—The important crops grown at Aligarh are mainly those of cotton, sugarcane and cereals, etc. Besides these vegetables and waternuts (*singhara*) are also important agricultural products. The chief pest on cotton are the Pink Boll worm (*Platydra gossypiella*), and spotted boll worm (*Earis faba and E. insulana*). The sugarcane crops are infested by the shoot, stem and root borers, with Pyrilla and with white fly (*Aleusodes barodensis*). Of the cereal pests aphids are the most important ones. The pests on vegetable are mainly Dipterous flies of which (*Atherigona excisa*) is very destructive to cucurbitaceae. The *singhara* (waternut) crops are infested by two beetles (*Glarucella birmanica*) and (*Haltica cyanea*) and the damage caused by them is very extensive.

Work done.—A general study of the life history and seasonal prevalence of these pests have been done. A biological study of *Glarucella birmanica* has been published in the *Journal of* Agricultural Research indigenous parasites and predators are being collected chief among those already collected are :

(1) *Rhogas aligarhensi Qadri* (a new parasite on pink boll worm).

(2) *Microbracon lefroyi* (parasite on pink boll worm).

(3) *Apanteles sp.* (on spotted boll worm).

(4) A new Ichneumon (parasite on boll worm under identification).

(5) *Jauravia sp.* (A predatory beetle on white fly).

Lines of further research.—The work to be done on insect pests will be to complete the detailed biology, life history, ecology and seasonal cycles of :

(1) White fly (*Aleuordes barodensis*) and Pyrilla sp. pest of sugarcane.

(2) *Atherigona excisa*—pest on cucurbitacae.

(3) *Haltica cyanea*—pest on *singhara*.

(4) *Aphidophagous Syrphidae.*

The above work will be chiefly concerned with fundamental problems of biology especially those of the selection of host plant, behaviour of the pests and critical analysis of the environmental complex including different biotic and physical factors.

The work in connexion with the parasite will include the study of the life history and biology of *Jauravia sp.* predator on the white fly. Attempts will be made to evolve a method of mass breeding of this beetle so as to make it an efficient factor for the control of white fly.

Apart from the above *Rhogas aligarhensi, Apanteles* and other indigenous parasites will also be studied firstly with a view to explore the fundamental problems of parasitism especially host selection and host parasite relationship and secondly to discover and improve their potentialities for the control of harmful insects.

The above scheme is also meant to provide a useful medium for the training of post-graduate students in Agricultural Entomology. The University has been training students in Entomology for M. Sc. and Ph. D. degree since 1931. There are at present seven students going up for M. Sc. and three working for the Ph. D. degree in Entomology. Besides them several members of the staff are interested in the problem of Entomology and have been doing creditable research work.

COST OF THE SCHEME.

A.—Non-recurring.

		Rs.
(1)	A glass house with a cover of wooden walls for rearing insects pests and parasites 10′ × 12′ × 14′ ..	1,000
(2)	Cost of cages, collection boxes and other implements ..	200
(3)	Laying out of experimental farm	500
	Total, for non-recurring expenditure ..	1,700

B.—Recurring.

No.	Items.	1st year. Rs.	2nd year. Rs.	Total for two years. Rs.
(1)	One part-time Research Assistant @ Rs. 50 per mensem.	600	600	1,200
(2)	Two field men (whole-time) @ Rs. 40 each per mensem.	960	960	1,920
(3)	One whole-time peon @ Rs. 12 per mensem ..	144	144	288
	Total, recurring expenditure for two years			3,408
	Grand Total, of recurring and non-recurring			5,108

Entomological publications of the Zoology Department, Muslim University, Aligarh.

1. Shari, M. 1934 : Historical Review and Relationship of the Genera of the family Ixodidae Parasitology, Volume 26, No. 1. Qadri M. A. H.

2. 1933 : Rhogas Aligarhensi N. sp. (pink boll worm parasite) Curr. sci. Volume II, No. 6.

3. 1934 : Studies on the Mallophaga of N. Indian Birds Zeitschr. Parasite. *8, (2).* Berlin.

4. *1936* : Some New Mallophaga from N. Indian Birds, *ibid, 8.* (2).

5. 1936 : Studies on the Mouth Parts of Mallophaga Proc. Ind. Acad. Sc. Volume III, No. 5.

6. 1936 : Male Genita lia of Mallophaga, *ibid*, Volume IV, No. 6.

7. Mahmud Hasan Khatib.

The Life History and Biology of Galerueela Birmanica, Part I.

APPENDIX LXIII.

Note on Subject No. 24 (e) :—Scheme for the survey of sugarcane borers —proposals to test the new sampling technique in a few elected areas.

At its meeting held in May 1939, the Advisory Board approved the programme of work for the sampling technique for the sugarcane borer survey, suggested by the Special Sub-Committee appointed by the Sugar Committee but did not accept the additional expenditure involved. It was considered that the actual amount of data to be collected by the scheme in that form was so great that it would be advisable to reduce the amount of work intended to be done until the suitability of methods which should be finally adopted was fully ascertained. The Second Imperial Entomologist was apprised of the position and he has submitted the attached proposals which are for consideration hy the Entomological Committee and the Advisory Board.

SCHEME FOR THE SURVEY OF SUGARCANE BORERS. PROPOSAL TO TEST THE NEW SAMPLING TECHNIQUE IN A FEW SELECTED AREAS. LETTER No. F. 19-(13)|39-S., DATED THE 23RD JUNE 1939, FROM THE IMPERIAL COUNCIL OF AGRICULTURAL RESEARCH, TO THE DIRECTOR, IMPERIAL AGRICULTURAL RESEARCH INSTITUTE, NEW DELHI.

Seventeen Regions as shown below have been sanctioned for carrying out the survey of sugarcane borers :—

1. Lyallpur.
2. Gurdaspur.
3. Muzaffarnagar.
4. Shahjahanpur.
5. Gorakhpur.
6. Partabgarh.
7. Siwan.
8. Pusa.
9. Gaya.
10. Dacca.
11. Berhampore.
12. Banki.
13. Anakapalle.
14. Gudiyattam.
15. Mandya.
16. Nizamabad.
17. Padegaon.

The authorities concerned have been written to by the Imperial Council of Agricultural Research but regular periodical reports are being received by me only from seven Regions which are :—

1. Muzaffarnagar, 2. Shahjahanpur, 3. Gorakhpur, 4. Partabgarh.	in United Provinces.
5. Dacca, 6. Berhampore.	in Bengal.
7. Mandya	in Mysore.

There are three difficulties at present for working the new sampling technique :—

1. Ten Regions have not started sending reports. (I have been in correspondence with them before sending the present proposal.)
2. No money is available in each Region under the Imperial Council of Agricultural Research grant to buy sugarcanes for examination. In each Region according to Imperial Council of Agricultural Research letter mentioned above Rs. 900 at least will be required for this purpose.
3. The travelling allowance grant from Imperial Council of Agricultural Research of Rs. 500 for each region is inadequate as according to the revised programme of work given in the same Imperial Council of Agricultural Research letter the round tours will require Rs. 1,500 or an additional grant of Rs. 1,000.

Now Imperial Council of Agricultural Research recommends in paragraph 2 of their letter under reply that " the technique recommended by the sub-committee may be tested out in a few areas first ".

I propose therefore that the new technique should be started from January 1940. Till then the Regions that have started work and the remaining Regions, which should be instructed to start work at once, will confine their tours to villages within five miles of the centre so that no travelling allowance becomes payable, and buy canes as far as the present grants under contingencies allow. This work will give training to the new staff and useful information. The savings under Travelling Allowance could be utilized for later travelling according to the new technique.

From January 1940 the following four Regions will be selected for the testing of the new technique. The remaining thirteen Regions will still confine their touring work to villages within five miles :—

1. Muzaffarnagar.
2. Siwan.
3. Dacca.
4. Gudiyattam.

In the thirteen remaining Regions as touring will be limited to the five mile limit there will be no spending of Travelling Allowance. This would mean a saving of 13 × Rs. 500 = Rs. 6,500 which could be utilized

for the four full scheme Regions at Rs. 1,000 per year the amount coming to Rs. 4,000 leaving a balance of Rs. 2,500.

This amount of Rs. 2,500 could be distributed to the four full scheme Regions at the rate of Rs. 625 per Region for the cost of buying canes. This cost has been estimated above at Rs. 900 in each Region. As each Region has already a contingency grant of Rs. 500 per year and as canes will not have to be bought during all the twelve months of the year this extra Rs. 625 should be enough for the cost of buying canes.

If this proposal is accepted I would request that the re-allotment of the grants be made by the Imperial Council of Agricultural Research if possible with effect from January 1940, or from the beginning of the next financial year that is March 1940 and that all concerned may be informed of this new plan for the Regional Survey scheme.

P. V. ISSAC,
Second Entomologist (Dipterist),
I/c Sugarcane Pests Scheme.

APPENDIX LXIV.

Note for the Entomological Committee on Subject No. 24 (f) :—Application from the United Provinces Government for a grant of Rs. 70,500 spread over three years for a scheme of further research on Pyrilla.

The attached scheme (Annexure) is circulated for consideration.

2. It is desirable that the Committee should clearly define the relationship of this scheme to the existing system (Central and Provincial) of sugarcane pest research and also suggest whether this scheme should be financed by the Imperial Council of Agricultural Research or whether this is not a case for financing from the provincial share of the sugar excise fund.

3. One Assistant for *Pyrilla* work on an average pay of Rs. 160 per mensem for a period of 2¼ years has already been sanctioned by the Imperial Council of Agricultural Research.

ANNEXURE.

Copy of letter No. 3545A/XII, dated the 8th September 1939, from the Government of the United Provinces.

I am directed to forward herewith, for the consideration of the Imperial Council, the noted below applications, from the Provincial Government. The required number of printed copies of the applications will be sent direct by the Provincial Director of Agriculture.

2. An application from the United Provinces Government to the Imperial Council of Agricultural Research for a grant of Rs. 70,500 spread over three years for a scheme of futher research on *Pyrilla*. (Enclosure I).

2. The schemes were considered by the Provincial Agricultural Research Committee and the resolutions passed by it are enclosed. (Enclosure II).

3. I am to request that the applications may be placed before the Advisory Board, at its next meeting.

ENCLOSURE I.

An application from the United Provinces Government to the Imperial Council of Agricultural Research for a grant of Rs. 70,500 spread over three years for a scheme of further Research on Pyrilla (the sugarcane leaf hopper).

Sugarcane leaf hopper in recent years has come to be recognized as one of the most severe pest of sugarcane in different cane growing tracts of Northern India. This insect when it occurs in large numbers sucks away the sugar contents from the leave and spoils the cane for making *gur* or factory crushing. A very severe and widespread attack occurred in the season of 1937-38. At places where the attack was as its worst the recovery of sugar by factories was reduced by 50 per cent. or more and *gur* boilers were unable to produce *gur* at all.

A systematic study of this pest commenced with the inauguration of Sugarcane Research Station at Muzaffarnagar in 1934 for the financing of which thanks are due to Imperial Council of Agricultural Research. During this period that the Scheme has been in progress a good deal of information has been collected on pyrilla. The results of the investigations have been embodied in the form of a Bulletin shortly to be presented to Imperial Council of Agricultural Research for publication. A brief outline of work is given in the following :

Scientific work done on Pyrilla.

(i) *Bionomics and life history.*—The adults of sugarcane leaf hopper are short brown insects, with two pairs of wings folded over the body. It lays its eggs on the under surface of the leaf till June and July. Later on the eggs are generally deposited on the sheathing part of the leaf between the cane stalk. The eggs are covered over with a white-flocculent material which makes the eggs very conspicuous objects against the greenish background of the leaf. Young hoppers are agile and begin the work of sucking immediately after hatching. Nymph take about 50 to 60 days in reaching the adult stage but during the cold weather the nymphal stage is prolonged from 100 to 125 days. These are the nymph and adults, which by draining away the sap that would have gone to the strengthening of the plants weakens them at a critical stage of their growth.

(ii) *Seasonal incidence.*—Over wintering nymphs become adult after the middle of March. The egg laying of the first brood of pyrilla begins by the middle of April and continues upto the middle of May. The eggs are deposited on the ratoon and September sown crops. The eggs of second brood are laid on plant crop from late June to the middle of July. The third brood deposits its eggs from the middle of August to the middle of September while those of the fourth brood are laid during November and December. The cycle during the cold weather is continued through the nymphs which develop into adults in the following March, thereby by completing four generations during the year.

(iii) *The nature of injury.*—Nymphs start feeding a few hours after hatching and never cease to do so throughout their life. They make minute punctures with their piercing mouthparts through which they suck away the sap from leaf tissues. Due to the continued feeding of the innumerable nymphs that the leaf gradually dries up. Adults are more drastic in the nature of attack. They deposit a honeylike excreta on the upper surface of the leaf, which becomes, black in due course and on which often a black mould grows. This black deposit badly interferes with the photosynthetic activity with the result that healthy leaves are rendered useless and hang down from the sheath.

(iv) *Distribution of pyrilla attack.*—Pyrilla is always present in the cane crop in this tract. But it is in certain years that it takes epidemic form and in certain localities that it does the

greatest amount of damage. It did considerable amount of damage to sugarcane in western districts in 1934-35. It was severe only at Daurala and Meerut in 1936-37 when other places were free from its attack. In 1937-38 it broke out in a most virulent form. Extensive damage to crop was done both in central and western United Provinces. In the years when western districts were free, it was reported to be severe in the eastern tract.

(v) *Causes of pyrilla outbreaks.*—Pyrilla may be expected to assume the shape of a severe pest if—

(1) During summer months of May and June easterly winds predominate and the mean atmospheric humidity is high.

(2) During monsoon months of July, August and September intermittent periods of draughts with easterly winds provide very favourable conditions for breeding.

(3) Sudden changes in humidity give an impetus to pyrilla to greater egg laying.

(4) Deficiency of rainfall in June and August.

(5) Presence and absence of parasites.

(vi) *Factors governing the intensity of pyrilla attack.*

(1) Varietal susceptibilities. Egg laying is much greater in broad leaved varieties in comparison to narrow leaved ones. Greater infestation has been observed in fields where large number of varieties are grown together.

(2) Heavy manuring and large number of irrigations. These factors promote a sappy and luxurious growth which attracts more of pyrilla in comparison to poor or unmanured crops.

(3) Ratooning. Continuity of pyrilla from year to year is maintained through the system of ratooning. Pyrilla being a shade loving insect prefers ratoons in hot weather when plant crop is not sufficiently foliaged. In its second and subsequent broods, the ratoon crop on account of stunted growth and non-succulent nature of leaves gets less attacked than the plant crop.

(4) Lodging of the crop. Lodging of cane crop further intensifies the damage. In 1937 heavy rainfall occurred by the middle of September. It was followed by a terrific wind. Most of the cane lodged and afforded greater shelters to leaf hoppers. The increased infestations in the lodged field rendered the crop worthless. Often canes became so soft that juice could be extracted by hand pressure alone.

(5) Frost. From the experience of 1935 and 1937 it appears that the effect of frost is more severely felt by the crop if it had been impoverished and weakened by pyrilla. The top leaves which were keeping up the plants got dried up on account of the frost. Thus dried appearance of the crop was a special feature in worst pyrilla affected areas.

(vii) *Effect of pyrilla attack on the crop.*

(1) Loss in growth and yield.

(2) Loss in sucrose and sugar recovery. A reduction by 4 to 5 per cent. in sucrose and 12 to 14 per cent. of purity in juice has been obserbed under severe pyrilla attack. These losses are fully borne out by the sugar recoveries in the factories.

(3) Loss in *gur*. Normally 11 per cent. is generally the production of *gur* in cane. In 1937-38 this production was reduced by half and the quality of *gur* made was inferior. At places it became difficult to make well set *gur*. What the cultivators made was " Rala " a semi-solid substance of bad colour and taste.

(4) Losses in *rab* and *khandsari* sugar. This community of indigenous sugar producers suffered very badly as they purchased juice from the cultivator. Under heavy pyrilla attack there is no appreciable reduction in juice expression. The juice had higher percentage of glucose and was poor in sucrose. Consequently the recovery of sugar was about one and half per cent. less than the normal. *Khandsaries* generally get 5 to 6 per cent. recovery of sugar through the indigenous system. A loss of 1½ per cent. is decidedly a very severe loss.

(5) Effect of pyrilla attack on seed cane. Pyrilla attack decreases the germinating capacity of eye buds. It was found to be less by about 10 per cent. when mildly pyrilla attacked and heavy pyrilla attacked samples were compared.

(viii) *Control measures.*

The following remedial measures were found useful to check the pyrilla menace :

(1) Harvesting should be finished by the end of April.

(2) Cane trash should be burnt or utilised for making compost manure in early harvested fields.

(3) Voluntary sprouts from the stubble and the late standing crop should be removed and fed to cattle.

(4) Bagging of adults and nymphs should be undertaken in infested ratoons, plant cane and fodder crops during May and June.

(5) Egg masses should be destroyed by crushing.

(6) Stripping of dry leaves should be resorted to from August onward and continued at fortnightly intervals till the pyrilla menace disappears.

The method of stripping improves the quality of the infested crop by an appreciable increase in sucrose and purity and most of the losses caused by pyrilla are made up.

How far our knowledge goes and where it is lacking.—The information summarized above clearly indicate that climate is the chief cause of severe pyrilla epidemics. Under non-favourable weather conditions, pyrilla does not occur in the form of a pest all over the tract, but localized outbreak and

damage to cane crop occurs every year. Besides pyrilla has been observed to occur in adult form at one place while at a few miles distance it is found only in nymphal stage though the climatic and other cultural conditions remain more or less the same. The causes underlined these variations are not known. Even during severe pyrilla outbreaks one region gets badly attacked while areas adjacent to it escape from the damage. Why grown up and healthy crops are more attacked than the poor ones is not known exactly. What part, if any, the chemical and physical properties of the soil play in increasing or suppressing leaf hopper menace need be found out. All this requires intensive investigation before a final answer can be given. It is, therefore, desirable to carry on a detailed study which has not been possible due to limited funds and resources. The following scheme is suggested so as to enable us to go into the intricacies of the problem more intensively and understand them properly so that evolution of practical, easy and effective control measures may be hastened.

The Problem.

(1) To enquire into the causes underlying pyrilla outbreaks.

(2) Correlation of pyrilla incidence with climate and cultural practices.

(3) Causes underlying differences in the phases of the pest at short distances.

(4) To test the efficiency of known control measures and to evolve cheap and effective ones.

(5) To study the bionomics of the natural enemies of pyrilla and try out the possibilities of biological control by the help of indigenous parasites.

(6) What part chemical and physical properties of the soil play in increasing or decreasing the damage.

(7) Study the varietal susceptibilities and their underlying causes, etc.

Methods to acquire the required information.—To carry on the intensive work on the various aspects of pyrilla problem, the following nine centres are proposed scattered over the western districts :

(1) Muzaffarnagar (main centre).

(2) Roorkee or Poorkazi.

(3) Bhopa (Muzaffarnagar East).

(4) Shamli.

(5) Daurala.

(6) Meerut.

(7) Bulandshahr.

(8) Mowana side.

(9) Baraut.

These centres are quite representative of the variations met within the tract not only in the incidence of pyrilla but there are variations in climatic conditions as well as in agricultural practices. Each centre will be provided with a set of meteorological apparatus to cor-relate pyrilla incidence with weather and other connected problems. The workers deputed to these centres will try the control measures in cultivators field. The study on the bionomics of pyrilla and its parasites and other allied problems will

be carried out at the main station (Muzaffarnagar). Co-operation of Economic Botanist to Government, United Provinces is sought for the analysis of soil samples at Shahjahanpur. The study of varietal susceptibilities will be centred at Meerut, Muzaffarnagar and Daurala where a large number of varieties are available.

Organization of work.—The investigations will be carried out under the direct supervision of the Cane Entomologist, stationed at Muzaffarnagar. He will be helped by a Senior Assistant. Two Junior Assistants will be required to supervise the work at the centres. One of them will be a Botanist to collect information on varietal characters. Every centre shall be having one Fieldman and 2 Kamdars to collect the necessary information.

Staff and other requirements.

Staff.	Average rate of pay.	Class of service.	Annual cost.	Qualifications and other particulars.
	Rs.		Rs.	
RECURRING.				
One Cane Entomologist ..	..	United Provinces class II.	..	Provided under the United Provinces Sugarcane Research Scheme.
One Assistant Cane Entomologist.	160 ..	Group I	..	Provision of Rs. 4,320 available for 2¼ years *vide* G. O. No. 7412-A. of December, 1, 1938. The Assistant should have post-graduate experience in Entomology.
Two Junior Assistants ..	90 each	Group II	1,080	One M. Sc. in Botany with experience of sugarcane work.
			1,080	One B.Sc. (Ag.) with Entomology as special subject.
Nine Fieldmen ..	45 each	Group III	4,860	B. Sc. or Intermediate in Agriclture or graduate with Zoology.
Eighteen Kamdars ..	16 each	..	3,456	Matriculation or Vernacular Final with aptitude for agricultural work.
One Laboratory Assistant	30	..	360	Matriculation with Science or drawing with experience of laboratory keeping.
One Laboratory Attendant	12	..	144	
One clerk ..	60	..	720	Typist with office experience.
Total annual salary of staff			11,700	
		Rs.		
Travelling allowance for 9 centres at Rs. 200 ..		1,800	..	(For Fieldmen and Kamdars).
Travelling allowance for Assistants ..		750	..	
Travelling allownce for Cane Entomologist		450	..	(For supervision work).
Total travelling allowance yearly ..		..	3,000	
Contingencies for 8 centres at Rs. 200 each		1,600	..	
Contingencies for central station ..		1,000		
			2,600	
Rent for Laboratory accommodation at Rs. 10 per month per centre for 8 centres ..		1,000	1,000	Yearly (recurring).
Grand total ..		..	18,300	
Or			18,500	

Staff.	Average rate of pay.	Class of service.	Annual cost.	Qualifications and other particulars.
Non-recurring.				
(1) Air conditioned glass house			Approx. 5,000	It is badly needed to study pyrilla and its parasites under controlled conditions and to verify the effects of climatic conditions observed in the field.
(2) A set of meteorological apparatus at Rs. 500 per centre (for 8 centres)			4,000	Muzaffarnagar has a complete set of meteorological apparatus. The set will include Raingauge, Stevens screen, thermometers, wind direction and velocity indicator, etc.
(3) Laboratory fittings and equipment. Miscellaneous apparatus for all the centres.			2,000	
(4) Furniture for 8 centres at Rs. 125 per centre			1,000	
Furniture for the main centre			500	
(5) Cost of control operation for 50 acres per centre at Rs. 5 per acre.			2,250	
Grand total for non-recurring .. .. Or			14,750 15,000	
Total recurring for three years			55,500	
Total non-recurring for three years ..			15,000	
GRAND TOTAL ..			70,500	

ENCLOSURE II.

COPY OF RESOLUTION NO. 16, PASSED IN THE 16TH MEETING OF THE U. P. AGRICULTURAL RESEARCH COMMITTEE, HELD AT THE COUNCIL HOUSE, LUCKNOW, ON AUGUST 10, 1939.

Agenda :	Resolution :
16. Consideration of an application from the U. P. Government to the Imperial Council of Agricultural Research for a grant of Rs. 70,500 spread over 3 years for a scheme of further research on Pyrilla (the sugarcane leaf hopper).	16. Resolved that the scheme be recommended to the Imperial Council of Agricultural Research.

APPENDIX LXV.

Note on Subject No. 26 (a) : Application from the Government of Sind for the grant of Rs. 1,34,460 spread over five years for a scheme of dry farming research on Sind.

A copy of a scheme on dry farming research, received from the Government of Sind, is appended (Annexure I). It involves an expenditure of Rs. 1,34,460 (Rs. 7,000 non-recurring and Rs. 1,27,460 recurring) spread over five years. The main heads under which the recurring expenditure is allocated and the provision under each head are given below :—

	Rs.
Pay of Officers	16,800
Pay of Staff	62,160
Contingencies	46,000
Travelling allowance	2,500
Total ..	1,27,460

2. The Provincial Government do not propose to contribute anything directly towards the scheme. As their contribution, they propose to establish an Agricultural Station in Lower Sind at a capital cost of Rs. 60,000 and recurring cost of Rs. 20,000 *per annum*. It will, however, be seen that the proposed station will be an experimental, seed and demonstration and cattle farm. The work on dry farming will be only one of the many items of investigation undertaken in that station. In this connection it may be mentioned that in May 1939, the Advisory Board while considering the extension of the existing dry farming schemes in Madras, Bombay, the Punjab and Hyderabad, recommended that the Provincial Government's contribution in the case of extensions should be at least one-third of the total cost. The Board also approved a common programme of work for the dry farming schemes at Hagari, Sholapur, Bijapur and Raichur, a copy of which is attached (Annexure II).

3. A copy of a note by the Agricultural Commissioner with the Government of India on this proposal is also attached (Annexure III).

4. The Scheme is for the consideration of the Board. As usual, it will first be considered by an *ad hoc* committee whose report will be circulated to the Board in due course.

ANNEXURE I.

A Scheme for Dry Farming Research in Sind.

Introduction.—It is a well-known fact that Sind is a rainless country, the annual rainfall being 5-6 inches. Agriculture in Sind depends solely upon the River Indus. A large portion of this Province has been commanded by the Lloyd Barrage Canals which give a perennial supply of water. There is, however, still a good portion of the country not commanded by the Lloyd Barrage Canals System and which depends on

inundation canals taking off from the river and consequently the water-supply is very precarious, depending on the vagaries of the river. Such tracts, of late, have suffered considerably. The cultivators are migrating to those parts where there is more assured supply of water. Very large areas of land which at one time were fertile have gone out of cultivation. The non-Barrage areas are situated both in the northern and southern extremities of the Province in the Dadu district and along river banks forming the *kacha* land (river alluviums).

In the non-Barrage areas, therefore, the introduction of dry farming methods has assumed great importance due to the special conditions prevailing in these tracts. These could be broadly divided into three categories : (*a*) areas which are subject to heavy flooding in the months of August and September when the river rises and where rabi bosi (unirrigated) crops can be grown on the the moisture retained in the soil, (*b*) areas where irrigation water is available only for a very short period where the full supply level in the canals in the kharif season is about 25—40 days as compared to 120 days in the Barrage Zone and the problem there is to grow crops successfully under these conditions, (*c*) *Barani* areas which depend upon rainfall only and the amount of rainfall varies from 4 to 6 inches per year.

The Government of Sind have already established two big research stations at Sakrand and Dokri where problems relating to agriculture under conditions of perennial irrigation are being fully studied. There is, however, very great demand for experimental work to be conducted in the non-Barrage areas to help the cultivator to adopt dry farming methods. Government of Sind have under consideration a scheme to establish an agricultural station to solve the problems peculiar to such tracts (copy attached for ready reference). It will be seen that the area of the Farm will be about 1,000 acres and the total capital expenditure on buildings, equipment, etc., is expected to be about Rs. 60,000 and the annual recurring expenditure about Rs. 20,000.

Present position.—The work of the Department of Agriculture in Sind has been so far confined to introducing improved methods of *bosi* (unirrigated) cultivation in the areas not commanded by the Lloyd Barrage Canals System. Results with wheat and oilseeds have been encouraging. A. T. 38 and H. S. W. 3 wheats have done particularly well under these conditions.

For kharif kangni 27, a variety of rice has been found to do well in areas with limited water-supply ; early maturing varieties of jowar, bajri and some pulses have also been introduced with success.

A good deal of work on dry farming is now being done in India, especially under the schemes financed by the Imperial Council of Agricultural Research. The soil, climatic and irrigational conditions in Sind are entirely different and the application of the results obtained elsewhere and the evolution of new methods are therefore urgently required for this Province.

While the general agricultural work as envisaged in the scheme will be done at the expense of Sind Government, the Imperial Council of Agricultural Research is being approached to finance research on the special prob-

lem of dry farming under different set of condition from those prevailing in other Provinces. The programme of work can be divided into—

(*a*) Physico-chemical.

(*b*) Agronomical.

(*c*) Botanical and Physiological.

Most of the proposed research work shall be co-ordinated with the other dry farming research schemes which are functioning in other Provinces and the result of Sind research will be available to other scientific workers in India. The results so far obtained in other research schemes will be considered and utilised while laying down the detailed technical programme. It is therefore requested that the Imperial Council of Agricultural Research may kindly finance the Scheme of Dry Farming for Sind as detailed below for five years in the first instance.

OUTLINES OF THE PROPOSED PROGRAMME.

A.—Physico-Chemical.—

(1) Investigations into the problems of conservation of moisture with reference to plant growth by cultural and other methods.

(2) Investigation into the nitrogen changes and movement of soluble available and reserve plant food in soil with reference to moisture concentrations.

(3) Agricultural survey of the *barani* area soil.

(4) To study the effect of green, organic and inorganic fertilisers on the physical condition of soil.

B.—Agricultural.—

(1) To investigate into the optimum dose of water to be given to land in inundation season, just enough to raise a successful crop of wheat, oil-seeds and pulses, after adoption of moisture conserving methods.

(2) To study effect of preparatory tillage on raising of *bosi* crops.

(3) To study seed rate, depth of drilling, spacing of wheat, oil-seeds and pulse crops under such conditions.

(4) To study the effect of inter-cultivation and mulching on the standing crop.

(5) To study the effect of farm yard manure and compost on different crops and their effect on the conservation of soil moisture and in ultimate economy of first flood dose of water.

(6) Contour levels with a view to design suitable bunding system.

(7) To study different varieties of wheat, oil-seeds and pulses, and their suitability for dry farming under Sind conditions.

(8) To study mixed farming economics under dry farming and to increase intensity of cropping.

C.—Botanical and Physiological.—

(1) Germination tests of the different varieties of crops sown with different preparatory tillage and at different depths, etc.

(2) Developmental studies of some of the important suitable selections from germination to maturity under different conditions of growth.

(3) Detailed study of the root system of the important varieties of wheat and other cereals, oil-seeds and pulses under different conditions of growth, as detailed belows :—

(*a*) Varietal differences, if any, and their suitability under dry farming conditions.

(*b*) Study of the root and shoot system at different stages of growth and finding of the relationship which exists between the two.

(*c*) Response of the roots to the different cultural operations, such as improved dry farming methods, in different spacings with interculturing, different depths of drillings and moisture content of the soils.

(*d*) Study of the root development in the mixed cropping with a view to evolve the best mixture, comprising of crops with roots occupying different layers of the system, etc.

Financial aspect of the scheme.—The scheme is estimated to cost a capital expenditure of Rs. 7,000 for equipment including meteorological instrument and annual recurring expenditure of about Rs. 25,492. The total cost will come to Rs. 1,34,460. A detailed statement is attached herewith.

The Government of Sind are providing a sum of Rs. 60,000 for capital expenditure in establishing the Research Station and would be spending a sum of Rs. 20.000 for recurring expenditure per annum.

It will be seen from above that the contribution of the Local Government will be quite substantial and hence the Imperial Council of Agricultural Research is requested to consider favourably the proposed scheme and finance it as early as possible. Thus successful results of this scheme will benefit an area of about a million acres.

Location of the scheme.—The main station will be located at Tatta (Karachi district) at the new Agricultural Station proposed to be established there. There will be two sub-stations, one in Upper Sind District and the other in the Dadu District.

A Meteorological Observatory shall also be set up at the main station and observations both inside and outside the cropped area shall be taken.

Control of the scheme.—The scheme will be in charge of the Soil Physicist under the control of the Director of Agriculture, Sind.

Dry Farming Scheme.

Statement of Proposed Expenditure.

No. of posts required.	Particulars.	Grade.	Amount required. First Year.	Second Year.	Third Year.	Fourth Year.	Fifth Year.	Total of column No. 4.	Remarks.
1	2	3	4					5	6
		Rs.	Rs.	Rs.	Rs.	Rs.	Rs.	Rs.	
	Meteorological Observatory	..	..	..	..	..	..	2,000	
	Laboratory Equipment and furniture ..	..	..	..	..	..	..	5,000	
	Recurring Expenditure.								
One ..	Soil Physicist	170—10—250—E. B.—15—400—E. B.—20—500.	3,000	3,180	3,360	3,540	3,720	16,800	Starting pay Rs. 250.
Two ..	Assistants—Botanical Agricultural	160—10—260 } 160—10—260 }	3,840	4,080	4,320	4,560	4,800	21,600	
Three ..	Non-graduate Assistants (one for each Section)	30—5/2—60—E. B.—4—100.	1,080	1,080	1,260	1,260	1,440	6,120	
Three ..	Jamadars Do.	25—1—35.	900	936	972	1,008	1,044	4,860	
Two ..	Laboratory Boys for Soil Physicist and Botanist	15 fixed	360	360	360	360	360	1,800	
One ..	Clerk	25—5/2—55	300	300	360	360	420	1,740	
Two ..	Peons	15 fixed ..	360	360	360	360	360	1,800	
	Contingencies	..	6,000	6,000	6,000	6,000	6,000	30,000	
	Travelling Allowance	..	500	500	500	500	500	2,500	
								87,220	

DRY FARMING SCHEME—*contd.*

No. of posts required.	Particulars	Grade.	Amount required, First Year.	Second Year.	Third Year.	Fourth Year.	Fifth Year.	Total of column No. 4.	Remarks.
1	2	3						5	6
	Two—Sub-Stations. (100 acres).	Rs.	Rs.	Rs.	Rs.	Rs.	Rs.	Rs.	
One ..	For each—Two Assistants	110—8—150	2,640	2,832	3,024	3,216	3,408	15,120	
One ..	For each Station—								
Two ..	Non-Graduate Assistants	30—5/2—60—4—100	720	720	840	840	960	4,080	
Two ..	Jamadars	25—1—35	600	624	648	672	696	3,240	
Two ..	Office boys	15 fixed	360	360	360	360	360	1,800	
	Contingencies	(Rs. 2,000 each Sub-Station).	4,000	3,000	3,000	3,000	3,000	16,000	
								40,240	
	Recurring Expenditure	Rs. 87,220							
	Two Sub-Stations	Rs. 40,240							
	Total for Five Years	Rs. 1,27,460	*i.e.* averrage. ecurring expenditure per year Rs. 25,492.						
	Non-recurring	Rs. 7,000							
		Rs. 1,34,460							

SCHEME AND ESTIMATES FOR THE ESTABLISHMENT OF A COMBINED EXPERIMENTAL SEED AND CATTLE FARM FOR LOWER SIND.

Introduction.—Attention is invited to letter No. 359-I-D., dated 18th April 1933, from the Chief Agricultural Officer in Sind (Mr. Jenkins), to the Collector of Karachi (Mr. Collins) and a copy forwarded to the Commissioner in Sind (copy attached), forwarding a copy of a report entitled "*Review of Agricultural Conditions in the Karachi District*" by Mr. K. I. Thadani, Botanist in Sind, who was deputed at the instance of Mr. Collins, to make a tour of Karachi district in order to study the existing conditions of agriculture and to submit a report indicating what action should be taken by Agricultural Department in Sind towards solving the agricultural problems of the zamindars and improving their agricultural practice. The letter under reference contains Mr. Jenkins' own remarks on the report of the Investigating Officer.

It has not so far been possible to start a Government Agricultural Farm in Lower Sind. The problems of this tract are different from those tracts where other Government Farms are located. This area is served by inundation canals and during the last few years for several years the river has not been attaining the usual flood level which was reached in the past and consequently the duration of the water supply has been somewhat decreased and the farmers of this area have begun to migrate to the more fertile lands in the Barrage Zone. The condition of the farmers is really not good and it is now high time that we should devote more attention to this tract. The chief problems in this tract are how to raise a successful crop of white rice with short duration of water supply, and to find out what are the other suitable crops that can be grown and at the same time to find out ways and means of utilising surplus water during the months of August and September for raising bosi-rabi crops. The chief crop of this tract is rice. This crop is transplanted. It takes about 3 weeks to raise seedlings before transplantation can begin. The full supply level of these canals is said to be about 40 days. Hence it is essential to find out ways and means whereby it would be possible to grow rice seedlings before inundation water is available for transplanting and at the same time to find out early maturing rice varieties.

Having found out suitable varieties of early maturing rice, it would be necessary to multiply their seed for distribution among the zamindars for which a Seed Farm would be absolutely essential. There are other problems also. This tract, specially the Karachi district, is the home of an important Sindhi Breed of cattle known as Red Sindhi and cattle is another side-line of agriculturist in this country. It is necessary to find out the most suitable methods whereby the farmer can get more profit from milk and also sale of animals outside Karachi district. For this purpose, grazing problems would have also to be studied. None of these problems can be studied at any of the existing Agricultural Research Stations. The climatic and soil conditions as also irrigation system are entirely different in Lower Sind. It is therefore necessary to have an agricultural station in Lower Sind.

Main objects of the Agricultural Stations.—The functions which the proposed agricultural station will perform and the problems it will deal

with, are shown hereunder :—

I. *Experimental Farm.*—This will consist of about 100 acres only to be cultivated departmentally and the following experiments and investigations will be carried out—

(*a*) *Rice.*—

(*i*) raising of early seedlings, and

(*ii*) evolving early maturing varieties, particularly of white rice.

(*b*) *Dry crops.*—

(*i*) study of methods to conserve moisture in the soil or what is known as dry farming ; special study will be made of the most suitable method of bosi cultivation,

(*ii*) finding out suitable kharif crops other than rice,

(*iii*) finding out suitable bosi crops for rabi season.

(*c*) Study of natural grasses and development of grazing areas.

(*d*) Sources of improvement of fodder supply namely fodder crops and huri plantations.

(*e*) Fruit plantations.

II. *Seed and Demonstration Farm.*—This will consist of 500 acres to be cultivated with hairs. It has been proved that white rice can be grown in Lower Sind. So far seed has been obtained from Upper Sind and hence it becomes very costly and zamindars cannot afford to purchase costly seed. It is therefore necessary to have a portion of the area for seed multiplication work. Similarly seed of other crops such as wheat, barley, and oilseeds, etc., would have also to be multiplied.

III. *Grazing areas, and Paddocks for cattle industry.*—It is proposed to apportion an area of 400 acres to be worked departmentally which will be called the grazing area wherein the natural grasses will be allowed to grow. Economics of cattle raising side by side with agriculture would have to be studied to prove that agriculture in Lower Sind can be made a profitable concern.

Vast areas are lying uncultivated in the Karachi district. If they can be properly developed in grazing areas for raising cattle, it would serve as a most profitable source of revenue to the Province specially in view of the fact that all the lands in the Barrage Zone are now occupied under field crops and it is not possible to raise cattle in the Barrage area. Therefore, it is essential to develop this side of the work in Lower Sind.

Site of the proposed Research Station.—It is proposed to open this Farm at Tatta in Deh Mir Khan on the Narichach branch of the Kalri Canal. About 1,000 acres of Government waste lands are available. Details of about 602 acres which are readily available are attached herewith (enclosure No. II). Details of remaining 400 acres are being collected. This block of land is at the foot of Makli hill on the east and is bounded by

Tatta-Jungshahi road on the north and Tatta-Karachi road on the south. It is intersected into two parts (East and West) by Narichach canal. From the preliminary examination of the soil, it has been found that it would be suitable both for dry crops as well as for rice cultivation and also for grazing area. Samples of the soil have now been taken and are being sent for analysis at Sakrand. The sub-soil water has been found at a depth of 12 *to 15 feet. At the same time there is a katcha well dug in the vicinity which* has yielded sweet water. The character of the soil is mostly sandy loam. The surface appears kalarish but the kalar could be washed down by heavy doses of water. The neighbouring fields show that the land is good.

Estimates of expenditure.—The following estimates will show the expenditure required for starting the farm :—

I.—Land Development— .. .. Rs.		31,300
(a) Jungle clearance, laying out canalisation, and plotting—	Rs.	Rs.
(i) at Rs. 25 per acre for 600 acres	15,000	
(ii) 400 acres (pasture area) at Rs. 10 per acre ..	4,000	
	19,000	
(b) Field constructions :—		
(i) culverts	1,500	
(ii) modules	750	
and (iii) pucca well or tube well including pump and engine	2,250	
		4,500
(c) Wire fencing along main raods and gates of the farm and wire fencing for paddocks	7,800	
II.—Buildings—		
(a) Farm buildings—		23,000
(i) Implement, bullock dutch barn shed ..	3,500	
(ii) Store for seed and produce, etc.	3,000	
(iii) Office building	3,000	
		9,500
(b) *Residential quarters—*		
(i) Farm Manager's quarters	3,000	
(ii) 2 Garduate Assistants quarters at Rs. 2,500 each	5,000	
(iii) One clerk and store keeper's quarters ..	2,000	
(iv) 6 Quarters for coolies	3,000	
		13,500
III.—Equipment—		
(a) Office furniture	1,000	
(b) Implements	2,000	
(c) Other Dead-stock	1,000	
		4,000
IV.—5 pairs of bullocks at Rs. 200 per pair ..		1,000
		59,300

It will be noted that the entire area of 900 acres is Government waste land for which no money has to be paid. Hence no provision has been made in the estimates. But in order to make a compact block, it would be necessary to acquire about 100 acres of kabuli area which would cost about Rs. 3,500 at the rate of Rs. 35 per acre bringing the total non-recurrent expenditure to Rs. 62,800.

Estimates for the Annual Recurrent Expenditure.

				Rs.
(*a*) Pay and Allowances				6,092
		Rs.	Rs.	
(*i*) Pay of Farm Manager in the scale of Rs. 160—10—260, average cost (Rs. 217 per mensem)		2,604		
(*ii*) Pay of two Graduate Assistants in the scale of Rs. 60—60—70—5—100. (Average cost Rs. 94 per mensem)		2,256		
(*ii*) Pay of one Clerk and Store-keeper combined in the scale of Rs. 25—5/2—55 (Average cost Rs. 46 per mensem)		552		
(*iv*) Pay of one peon at Rs. 15 per mensem ..		180		
			5,592	
(*b*) Travelling allowance			500	
Contingencies :—				
(1) Upkeep of Live Stock		1,200		
(2) Cultivation charges including pay of 2 Jamadars, one Engine Driver and one ploughman, etc. ..		5,500		
(3) Upkeep of Dead stock and machinery including engine		1,200		
(4) Agricultural Experiments		3,500		
(5) *Miscellaneous*—				
	Rs.			
(*a*) Office expenses	250			
(*b*) Petty construction and repairs ..	250			
(*c*) Service stamps	150			
(*d*) Rents, rates and taxes ..	1,200			
(*e*) Purchase of manure and seeds, etc.	500			
(*f*) Upkeeps of roads and channels .	500			
		2,850		
				14,250
			Total	20,342
			Rounded to	20,400

Receipts.—During the first year, there will be no receipts but in subsequent years, it is anticipated that the receipts will amount to Rs. 7,000 per annum.

Summary.—The Farm will consist of about 900 acres of land. The object of the Farm is threefold, namely, (1) to provide an experimental area covering about 100 acres where experiments and investigations on rice, dry crops, natural grasses, fodders and fruit plantations would be

carried out, (2) to provide a seed and demonstration farm covering an area of about 500 acres where improved seeds would be multiplied and made available for distribution among the zamindars. At the same time, it would be possible to show improved methods of cultivation to the zamindars of Lower Sind, and (3) to solve the grazing problems and thus make better use of the uncultivated waste lands in the Karachi district and at the same time to promote cattle industry of the Province specially the Red Karachi Breed. The proposed combined experimental seed and cattle farm will be situated in an ideal locality just below the foot of the Makli hills surrounded by two main roads namely the Karachi-Hyderabad Road and the Jungshahi-Tatta Road and intersected by Narichach canal. The soil is suited both for rice and dry crops investigations and also for grazing areas. The capital expenditure is estimated at Rs. 62,800 as shown hereunder :—

	Rs.
Land Development	31,300
Buildings	23,000
Equipment	4,000
Bullocks	1,000
Acquisition of kabuli area	3,500
Total ..	68,800

The recurrent expenditure is estimated at Rs. 20,400 per annum.

K. I. THADANI,

Director of Agriculture, Sind.

ENCLOSURE No. I.

No. 359-I-D. of 1939.

Office of the Chief Agricultural Officer, Sind,

Karachi, dated 18th April 1933.

SUBJECT :—*Agricultural conditions in Karachi District—Review of—*

MEMORANDUM.

The Chief Agricultural Officer in Sind presents compliments to the Collector, Karachi district, and has the honour to forward herewith a copy of the " Review of Agricultural conditions in Karachi district " submitted by Mr. K. I. Thadani, Botanist in Sind. Mr. Thadani was deputed to make a tour of Karachi district in order to study the existing conditions of agriculture and to submit a report to the undersigned indicating what action could be taken by the Agricultural Department in Sind towards solving the agricultural problems of the zamindars and improving their agricultural practice.

Section VI of the " Review " contains suggestions and recommendations made by the Investigating Officer, concerning which the Chief Agricultural Officer in Sind has the undernoted remarks to offer :—

(1) *Substitution of the present rice varieties.*—Mr. Thadani recommends the substitution of the common " Ganja " variety of

rice which ripens in 90 days and requires 55 days water-supply after transplanting by the "Kangni" variety of Upper Sind which ripens much earlier. In addition Kangni is a better quality rice and should fetch a higher price in the market than Ganja.

Steps have been taken this season to supply a quantity of Kangni seed to suitable zamindars in the areas visited but some organisation will be necessary to ensure the multiplication of the seed and its further extension in the tract. The Agricultural Department is not able to supply more than a nucleus of pure Kangni seed each year and it is suggested that a co-operative seed society working in conjunction with registered seed growers would accelerate the introduction of this superior variety throughout the rice-growing areas of the district. The Deputy Registrar, Co-operative Societies, Sind, might be asked to undertake the organisation of a suitable society in consultation with the Mukhtiarkars concerned and the officials of the local zamindari associations. The Agricultural Department will intensify its propaganda and demonstration work in the direction of the introduction of Kangni rice and a leaflet in the vernacular will be prepared and distributed in the tract, pointing out the advantages to be gained by the cultivation of this variety in preference to the local Ganja.

(2) *Water-saving devices.*—In order to take full advantage of the restricted period during which irrigation water is available for rice cultivation, Mr. Thadani recommends the extension of the system of 'purani korar" in areas where this method of sowing is practicable, *i.e.*, in low-lying lands, beds of *dhands*, etc., where the soils are retentive of moisture. This appears to be largely a matter for propaganda on the part of the local officers.

The same applies to the recommendation for the extension of the practice of raising seedlings on the moisture contained in low-lying retentive lands, *i.e.*, "puranee bejaran", in order that seedlings may be ready for transplanting as soon as canal water becomes available. It is suggested that it might be possible to organise the production of seedlings for a fixed area on a centralised co-operative basis, *i.e.*, the seedlings required by a number of zamindars should be grown in a specially suitable, selected centre, either on "puranee bejaran" or on katcha well irrigation and distributed as soon as transplantation becomes possible, the cost of the raising of the seedlings being shared by all the zamindars concerned. The possibility of such organised methods of central seedling production will be investigated by the local officer of the Agricultural Department.

(3) *Rotation of crops and fallows.*—The investigator recommends the concentration of rice cultivation on not more than two-thirds of a holding annually, the remaining third to be left fallow or cultivated under a *rabi* crop. It would appear that

force of circumstance will compel the adoption of this system of cultivation under existing conditions of water-supply.

(4) *Encouragement of dubari cultivation.*—I consider that it is most important that every thing possible should be done to encourage *dubari* cultivation and to extend this practice in the district. Mr. Thadani points out that, in certain cases, where failure of the rice crop has occurred, remission of land revenue is postponed where dubari crops are grown until these come to maturity and if the dubari crop yields produce worth twice the assessment remission is refused. As a result, zamindars are disinclined for dubari cultivation. If possible, from the revenue point of view, dnbari cultivation should be regarded as a form of green manuring and should receive most favoured treatment in connection with land assessment charges. The effect of dubari crops on the fertility of the land—and on the subsequent yields of rice crops—justify such action being taken for a period of years at least in order to encourage the extension of the practice of dubari cultivation.

The Agricultural Department will prepare a vernacular leaflet on dubari crops and their cultivation for distribution in the district and will arrange for demonstration plots to show the advantages of this practice to the zamindars.

(5) *Cultivation of rabi crops.*—Mr. Thadani suggests that special efforts should be made to encourage the cultivation of rahi crops, *e.g.*, toria, jambbo, barley, etc., in such lands where conditions for rabi cultivation are favourable. It is possible that any real extension in this direction must be prefaced by the introduction of cheap and efficient tillage implements for cultivation operations and, in particular, for cleaning the land and removing weedy growth. Any extension of cultivation on new lands should definitely be in the direction of rabi cultivation only and canal water available used for growing rabi crops under *pseudobosi* conditions.

The local officer of the Agricultural Department will be instructed to investigate the possibility of extended rabi cultivation more fully and to conduct experiments in this direction on suitable areas.

(6) *Extension of cultivation of dry crops.*—I do not think any immediate action is necessary in this connection beyond experimental work by the Agricultural Department with suitahle crop varieties.

(7) *Introduction of improved implements.*—As mentioned in para. 5 above, work in connection with the introduction of improved implements is essential as a preliminary to the extension of rabi cultivation. A cheap and efficient clod crusher and a light plough for rice lands are necessary and an adaption of the Gujerat hoe for cleaning weedy lands is required. Two suitable implements, *viz.*, a cheap and efficient clod-crusher and an improved Gujerat hoe have

recently been designed by the Agricultural Department and will be tested and demonstrated in the district. Types of the existing *deshi* implements will be obtained and sent to the Joint Mechanical and Agricultural Engineer, Sukkur, for examination with the object of increasing their efficiency by improvement in design, etc.

(8) Mr. Thadani has outlined a tentative programme of agricultural experiments which should be undertaken in the Karachi district by the Agricultural Department. It would be preferable if these experiments could be carried out on a plot of land under the direct supervision of the local officer of the Department although several items, *e.g.*, trials of early rice varieties, can be done satisfactory on zamindari lands. It would considerably facilitate this work if Taluka Development Associations were organised in the district and I consider that such organisations should be undertaken as soon as possible.

The attention of the Deputy Registrar, Co-operative Societies, will be drawn to this requirement and the local Mukhtiarkars might be asked to assist in establishing the associations under his guidance.

(Sd.) W. J. JENKINS,

Chief Agricultural Officer in Sind.

Report of the Botanist in Sind on the existing conditions of agriculture *in Karachi District and proposals as regards action to be taken to* meet the new conditions resulting from the deficiency of water-supply.

I. INTRODUCTORY.

I was deputed by the Chief Agricultural Officer in Sind to the Karachi District for a few days to inquire into the Agricultural requirements of the district and to advice on the question of a type of rice seed suitable to the needs of district and to suggest such action as may be taken by the Agricultural Department in Sind to accelerate the extension of the improved agricultural methods and materials and to assist the zamindars in adjusting their agricultural practice to meet the new conditions resulting from the shortage of water-supply during the last three seasons. I was further advised to draw up a programme of work to be carried out by the Agricultural Department next season. At first I thought a week's tour would be sufficient but on the advice of the President, Zamindars and Jagirdar's Association, Karachi District, I extended my visit to 11 days having spent 6 days in Shah Bunder Division and 5 days in Tatta Division. I started from Sakrand on 18th February 1933, and reached Mirpur Bathoro *via* Tando Muhammadkhan on 19th instant. From there I proceeded to Sujawal, Chuhar Jamali and Tatta and have seen a large number of dehs in Mirpur Bathoro, Sujawal, Shah Bunder, Tatta, Sakro and Ghorabari Talukas. I have met a very large number of zamindars and haris in order to know the existing conditions of soils and cultivation and have seen the standing rabi crops, examined soils and sub-soils and have taken soil samples for analysis, as regards their salt

contents, physical consistency and capacity to retain moisture. I have met the Irrigation Officers, *viz.*, Sub-Divisional Officers of Mirpur Bathoro, Chuhar Jamali, Nari Chach, Kalri System and Baghar Canal System and also the Executive Engineer of Karachi Canals in order to get full knowledge of the existing conditions of water-supply. The Collector of Karachi was kind enough to meet me at Mirpur Bathoro in the beginning of my tour in order to acquaint me with the district conditions, again in the middle of my tour at Sujawal and finally at Tatta where a large gathering of zamindars from all Talukas had collected. Similar gatherings were called by Mukhtiarkars of Talukas mentioned above at their headquarters.

II. Existing conditions of water-supply in Karachi District.

This district has three main canal systems besides the canals taking off direct from the River Indus. Each system may be considered separately.

(a) *Canals on the Left Bank of the River.*

(1) *Pinyari Canal System.*—This canal flows through Mirpur Bathoro and Sujawal Talukas. It begins to flow on 15th of May. Flow water is not available even on low lands until 15th June. Full supply level is reached by 15th July and lasts until 1st September. It may extend to 10th of September if canal rotations are worked upto that time. As a rough estimate it may be assumed that 70 per cent. of the area commanded by this canal is low lying and 30 per cent. high lying. If this statement is correct it may be taken for granted that the duration of canal water available is 60 days (1st July to 10th September) for flow lands and 45 days (15th July to 1st September) for high lands.

(2) *Other canals on the Left Bank.*—These take off direct from the River Indus. Some of these canals flow late and in the beginning water level is rather low. Although the duration of flow water supply is hardly 30 days, still rice is grown. The canals in Chuhar Jamali seem to bring better water supply for rice cultivation.

(b) *Canals on the Right Bank.*

The condition of water supply on this side of the river is rather worse than the tract on the Left Bank. Two Canal Systems, *viz.*, (1) Kalri Nari Chach, and (2) Bagar, feed this tract, besides canals taking off from the Indus direct.

(1) *Kalri Nari Chach System.*—This canal flows through Tatta and Ghorabari Talukas and starts running on about 10 of June at low level which improves by 15th July when water could flow in low lying lands. Full supply level of water is received by about 1st August and lasts until 10th September, the total period of full supply level being 41 days. This duration can be extended by 5 days, on branches of this canal system by adopting rotations. I was informed that 80 per cent. of the area on this canal system is low lying and 20 per cent. high lying.

(2) *Bagar Canal System.*—This canal flows through Tatta, Mirpur Sakro and Ghorabari Talukas. Water flows on 1st of June and full supply level is obtained on 20th July and finished off on 1st September lasting for 45 days. Half the area on this canal may be considered as low lying and half high lying. This canal has no regulator and a large volume of water goes to the sea.

III. Existing conditions of Agriculture.

(a) *Annual cultivation and kinds of crops.*

The following statement will show the area under cultivation and the kinds of crops grown :—

Taluka.	Cultivated area in acres 1931-32.							
	Kharif.			Rabi.				
	Rice.	Dry crops.	Total.	Wheat.	Barley.	Jambho.	Other crops.	Total.
Mirpur Bathoro	44.439	2,755	47,194	143	542	3,289	2,655	8,620
Sujawal ..	30.718	18,880	45,598	503	802	4,796	1,818	7,919
Shah Bunder	Figures not available.							
Tatta ..	10,942	3,884	14.826	1.815	1,377	1,057	3,465	7,714
Mirpur Sakro	20,226	3.021	23,247	128	1.250	296	3,125	4,799
Ghorabari	Figures not available.							
Total ..	102,325	28.540	134,865	2,589	3,971	11,438	11,063	29,061
Percentage	78·84	21·16	100	8·9	13·66	39·3	38·14	100

It will be seen from the statement given above that 86 per cent. of the annual cultivated area in both Mirpur Bathoro and Sujawal talukas is under kharif and 14 per cent. under rabi. In Sakro taluka the proportion of kharif and rabi cultivation is 83 per cent. and 17 per cent. In Tatta Taluka the proportion of kharif to rabi is 74 to 26. As the figures under rabi cultivation include 'dubari' crops grown after rice, the area under 'Khalis' rabi is very low. Rice is predominant crop in kharif season in all the talukas and dry crops occupy a minor position. In rabi jambho is grown on a large scale in Mirpur Bathoro and Sujawal talukas and barley occupies similar position in Mirpur Sakro Taluka. In Tatta, wheat, barley and jambho are grown on fairly good scale.

(b) *Methods of rice growing in vogue.*

(1) *Purani Korur.*—In this method seed is broadcasted directly into the field on old moisture retained in the soil. This is as a rule practised mostly in very low lands and beds of 'Dhands' which retain moisture and being liable to submersion would not permit of transplantation. The land is ploughed as soon as the soil would permit, and three ploughings are given. Seed is sown in the month of May at the rate of 6 'kasas' per acre. The crop receives irrigation after about 40 days on the opening of the canals. If the inundation is late the crop suffers.

(2) *Nai Korur.*—Wherever canal water is available early in June it is let into the land which has been previously ploughed to a depth of about 6″. Seed is then thrown broadcast, when it germinates and plants have attained a height of few inches the crop is watered, from time to

time according to requirements. This crop does not suffer so much if there is break in the inundation supply. This method is also known as 'Gurbi' or 'Kur chat'.

(3) *Transplanted crop.*—The seedlings are raised in three ways :—

(*a*) 'Puranee Bejaran' (seed beds) (on old moisture).—Lands which retain moisture and are low lying are selected for 'puranee' seed beds. The land is ploughed soon after harvest when it comes in condition and clods are broken with a wooden hammer. Several ploughings are given and the land is covered each time by 'samar' being run over it. The seeds are sown in the middle of June and are ready for transplanting by middle of July when full water level is received. Sometimes seeds are sown earlier, that is, in the end of May and if the inundation is late the seedlings are likely to be lost. Wherever canal water is available in mid-June in sufficient quantity for the rice seed beds either by flow or by lift the seed beds should be given a soaking of canal water to supplement 'puranee' moisture.

(*b*) *Nai Bejaran*—(seed beds on new water) :—Where canal water is available early in June seed beds are prepared in low lying lands. The beds are flooded as soon as water is received in the canals and seed drilled. Where canal water is not available by mid-June for sowing seed beds it is essential to grow seedlings on 'katcha' wells, but this practice is very little known. Seedlings are ready in 40 days.

(*c*) *Khamosh.*—This is another less common method of obtaining seedlings. Low lying land is selected and after it has been thoroughly ploughed and clods broken with wooden hammer, small heaps of farm yard manure, paddy husks, etc., are placed upon it and then spread and burnt. The seed is sown broadcast in the ashes. Water is then allowed sparingly and the seedlings become ready in about 3 weeks time and sometimes less. The only danger of this method is that if the inundation is late the seedlings become overgrown and are unfit for transplantation. It is advisable to expedite the transplantation of rice crop before the rains have set in, *i.e.*, by end of July or beginning of August.

(c) *Varieties.*

Motia variety is mostly confined to low lying lands and 'dhands'. Ganja is the most common variety. Early varieties are little known, Kharai Ganja and Kambroo which are early types are grown in Shah Bunder taluka to a small extent. Motia variety takes about 120 days to ripen and about two months canal water-supply from date of transplanting. Ganja variety takes about 90 days to ripen and 45 days canal water from time of transplanting. Kharai Ganja and Kambroo ripen in 60 to 70 days and require 40 days water-supply from time of transplanting.

(d) *Preparatory tillage and dubari crops.*

As a rule the rice lands are ploughed during the cold weather and the seedlings are transplanted in the ploughed ground. In many places

'dubari' crops are grown after rice. Such lands which do not permit of being worked up with the plough for sowing of rabi 'matar' soon after harvest or where the hari is unable to do the rabi dubari sowing are planted with mung and manh, during 'adhawa' season that is by the end of February or beginning of March. This practice of growing 'dubari' crops is prevalent only in a portion of the Karachi district.

(e) *Cultivation of dry crops.*

Jowari and bajri are grown on a small scale on areas where water is lifted from the canal. The land as a rule receives some farm yard manure and no preparatory tillage is given as labour involved is great and cost of cultivation is much higher. These crops are undertaken as sheer necessity for high lands. Rice is in every respect more paying crop, hence there is no prospect of substituting dry crop on rice lands where water is received by flow.

(f) *Cultivation of rabi crops.*

Rabi crops are grown 'bosi' either as 'dubari' (second crop after rice) or as 'khalis' rabi on lands which had no kharif crop on them. For the latter the land is flooded in the month of August-September. No subsequent watering is given. The land is worked up for rabi crops with the plough and 'Sarkar'. The flooding as a rule is not sufficient for want of bunds and sub-division of land into smaller compartments. There is a considerable scope of improvement in this direction. Jambho is as a rule grown on kalarish and stiff lands. Barley is grown on light soils and wheat on sweet soils which retain moisture. In soils infested with 'dub' matar is grown. I was informed in Mirpur Bathoro that there is a particular date when water is allowed for rabi flooding. This is perhaps 15th of September and may be a limiting factor in the cultivation of 'bosi' rabi. Such restriction, if any, should be removed.

IV. Soils and other general considerations.

Mirpur Bathoro.—In the southern portion of Mirpur Bathoro Taluka the land is saltish and fit for rice only. There is no prospect of dry crop being grown here on rice lands. Jambho is grown as pure rabi but the growth is poor. The outturns obtained are very low and it is also very susceptible to frost. Dubari crop after rice is not grown owing to the stiff nature of the soil and want of sufficient moisture to mature the crop. The upper portion of Mirpur Bathoro is somewhat different. The soil is sweeter and a portion of this part of taluka growing rice and watered from Pinyari Canal System is fit for dry crops and also 'khalis' (pure) rabi cultivation. The lands in Upper Bathoro watered from canals taking off direct from the river have very good soil but are suffering from extreme deficiency of water. On Alibahar Canal (deh Laikpur) water was received in Karyas in August, still zamindars grew rice seedlings of ganja variety on canal water and transplanted their crop very late. In such places it is sheer waste of labour to grow rice specially such a late variety as ganja. The problem in Mirpur Bathoro taluka is chiefly substitution of early varieties of rice in place of the existing variety namely Ganja and replacing Motia variety at present grown in 'dhands' and low lands with the present Ganja variety. At the same time growing of rice seedlings on katcha wells before water is received in the canals is advisable instead of growing them on canal water as 'bejaran' (seed sown deep with the drill) which takes

5 weeks to make seedlings ready for transplanting. Where seedlings have to be grown on canal water it would be advisable to introduce 'Khamosh' System of raising seedlings which takes about 20 days to make the seedlings ready for transplantation. In this taluka a portion of the rice holding is left fallow especially where the crab trouble in the preceding kharif season has been great and rice is sown on such lands as broadcast (gurbi or kur chat). This practice should be encouraged.

Sujawal Taluka.—The conditions in Sujawal taluka are different from *those in Mirpur Bathoro. No doubt soils are sweeter* than those in Lower Bathoro and are much more retentive of soil moisture so much so that one-third of the rice area is sown as 'Puranee Korur' on old moisture retained in the soil from the previous year's inundation. This method of utilisation of moisture retained in the ground is very helpful in improving the conditions of rice cultivation in Sujawal talukas. At the same time two-thirds of the cultivated area in this taluka is that the seedlings are raised on old moisture (puranee bejaran) and hence the canal water is utilised mostly for transplantation without any time being lost in the growing of rice seedlings. The situation is, however, not quite satisfactory on lands watered from canals taking off direct from the river. Here again the problem is to substitute early ripening varieties like Kharai Ganja and Kangni in place of Ganja variety. There are portions in this tract where duration of water supply is very small and only such varieties like Chalibaro which ripen earlier than Kangni and Kharai Ganja should be grown or rabi cultivation should be resorted to in place of rice crop. In this tract also raising of seedlings on katcha wells and as 'Khamosh' should be advocated in places where seedlings cannot be raised in 'puranee' bejaran. In this tract there is great need of introduction of improved implements including a clod crusher.

Chuhar Jamali (Shah Bunder Taluka).—The problems here are some what like Sujawal. The soils are sandy loams and retentive of soil moisture. Rice is grown on a portion of the holding as a 'Purani Korur'. The land received two to three ploughings and seed is sown broadcast in April-May at the rate of 2-3 maunds per acre. It is sometimes drilled. This practice is much more preferable than broadcasting seed. Sowing of seed on 'Purani Korur' lands should be finished by 15th of May and should not be delayed longer specially in case of Motya variety. Ganja variety may be sown upto middle of June. In any case sowing of seed on korur lands should be so adjusted that it receives first watering from canal water 40 days after transplanting. Growing of rice by this method is done mostly on good land. One-third of rice area on this side may be said to be under 'korur' and two-thirds under transplantations. Seedlings for the transplanted crop are raised in Puranee 'bejaran' in the month of May and water is applied about forty days after sowing in the month of June. Transplantation begins in middle of June. Ganja is the most common variety and Motya is grown to the extent of 20 per cent. and has no much demand in the market. Kharai Ganja is grown to the extent of 10 per cent. and is said to be subject to the attack of ground grass hoppers and rats. Transplanting goes on upto the month of August but it is desirable to finish transplanting by the end of July. Dubari cultivation is not done except in few patches. This should be encouraged. Here there is a great scope of increasing the area under

Puranee korur and reducing the area under transplantation which is so much desirable. Early types of rice should replace the present variety Ganja except in ' Dhandhs '. It will be advisable to raise seedlings on new bejaran either on katcha wells or by Khamosh method. Here zamindars would be well advised to divide their lands into blocks and leave a portion of their holdings fallow. In this act those soils which are free from ' Suho ' (a sandy stratum of a few inches below the surface) are admirably suited for rabi crop. It would be in the interest of zamindars to adopt a system of rotation wherever practicable by growing one year rice in kharif, rabi being fallow and another year kharif fallowing rabi winter crop such as Jambho, barley, etc. Here also the scope of introducing improved implements and clod crusher is very great.

Tatta and Mirpur Sakro and Ghorabari Talukas.—This tract is situated on Kalri Narichach Canal and Bagar Canal Systems. The Kalri Narichacb Canal System was designed to supply water for two-thirds of the present rice area but it seems that 10 per cent. of the land is being cultivated with this crop. Seedlings are raised in low lands or ' dhands ' in puranee bejaran on old moisture retained in the soil from previous year's floodings supplemented by water lifted from the canals during the *month of June when canals begin to flow say 10th of June and flow water is not available until a month later (mid July to 1st August). The conditions of water supply on this canal system would permit of seedlings being raised on ' Khamosh ' (seed sown shallow)* since transplantings cannot be started earlier than 15th of July on low lands and 1st of August on high lands. The Irrigation Department would be well advised to give facilities to zamindars to utilise water in the canal from the time the canals begin to flow till the time the level reaches high enough for flow supply so that zamindars may keep their seedlings ready. As the modules are designed to give flow water when full supply level is reached it may be necessary to give another opening at lower level expressly for raising seedlings. Such a device would considerably help in successfully maturing the rice crop with 45 days full supply period. In fact it is most essential that the zamindars should lift water from the canals for raising seedlings and be ready to start transplantation as soon as flow water is available. The *present variety of rice, viz., Ganja should be replaced by early variety. It is further advisable to zamindars to sub-divide their lands into blocks and grow only two-thirds of area under rice and leave remaining one-third* fallow during kharif season and grow rabi crops wherever possible. Although certain portions are really unfit for rabi, bosi crops in this tract, I personally think a fairly large portion of kalri Narichach system can grow, bosi crop provided the land is divided into blocks and enclosed with bunds so that a good heavy flooding can be given. There is some waste land on Narichach canal below 15th mile regulator which on the surface is all kalar. I took a section of this soil and found that the kalar layer was only 2″ deep and below it was 4″ layer of sand and sub-soil was fine sandy loam. Here the sandy layer seems to have protected movement of salt in the sub-soil ; thus although 2″ surface layer has an appearance of intensive kalar, such soils can be easily reclaimed by leaching during the course of three seasons. I saw good crop of jambho sown for the first time on this land. I was informed that there was ample provision of canal water for this land and the Government was thinking of selling this land. I venture to suggest that as there is already deficiency of water to mature the existing rice crop

it would not be advisable to give out new land for kharif *cultivation* but there is no objection, if the land is given out only for rabi cultivation. In this tract there had been considerable remission of assessment as the rice crop had failed. Good rabi bosi crops could have been easily grown on such land but I found that the zamindars and specially forbidden dubari rabi cultivation as the ' maffi ' otherwise would have been suspended until the maturity of dubari crop and if dubari crop yields produce worth twice the assessment remission of land revenue is refused. This is a great handicap in affording some relief to the cultivators who have lost their crop ; at the same time no use is made of water consumed in growing of the rice crop which has failed. *It should also be borne in mind that dubari crop maintains the fertility of soil and also keeps the land in good physical condition.* I personally think such a rule should be relaxed since Government are in no way losers but the cultivators do benefit by the cultivation of dubari crop.

As regards lands situated on Bagar canal, 50 per cent. of the area is low and 50 per cent. high-lying. Seedlings are raised partly in ' Dhandhs ' on ' Purani Bejaran ' and partly by lift on the bank of the canal in which pools of water are found and new canal water is received by about 1st of June. Full supply level is reached on 20th of July and lasts until 1st September in 41 days. Probably 50 per cent. of area is saltish and 50 per cent. good. Under the present conditions of water supply it is not possible to mature Ganja variety nor there is any prospect of dry cultivation which is as a rule restricted to the banks of Bagar canal and involves much expenditure on lifting of water, preparation of land and manuring. Lower down the flow area being saltish is considered unfit for *bajri crop. Here the condition of people is indeed pitiable. I understand* that Irrigation authorities have a project in view to provide cross regulators and remodel the canal. Until this is done there is not much hope of improvement in the conditions of agriculturist. I would suggest that the people cultivated half the area and left the remaining half as fallow. As regards the land situated on canals taking off from the river direct the duration of water supply is so short that the rice crop cannot be successfully grown on it. In this tract we should grow varieties which are expressly early, no matter if yield is less than the Ganja variety or grow ' Khalis ' rabi crops in place of rice.

River ' Katchas '.—There is a vast expense of katcha lands on both sides of the river. Excellent bosi crops can be grown. It is very surprising to see that a good portion of this area has remained undeveloped. All that is required is jungle clearance, proper preparation of the land with a low and a ' sanvan ' and planting seeds in time. I saw excellent crops of barley and wheat grown by Imambux Gahar, zamindar, on ' katcha ' *land newly developed. I wish other zamindars could follow this example.*

Waste lands and rat pest.—Rats are a serious menace to the rice crop in the Karachi district. I was often consulted as to what could be done to eradicate this pest. I explained that unless co-operative action was taken to destroy rates by fumigation and other means it was difficult to eradicate this pest. There are many waste lands full of jungle and scrub growth specially in Sujawal and Shahbandar Talukas which give a permanent shelter to this pest. If these lands were given out to zamindars strictly for rabi cultivation since kharif water supply is already deficient for the existing area, it would greatly relieve the danger from rat pest.

V. Duty and water requirements of rice crop.

With a duty of 30 for rice as allowed on the Karachi canals and duration of 45 days for full supply level the total delta of irrigation water supplied to the rice crop would amount to 36″. The delta of water available for the rice crop on the Barrage canals is 72″, on the basis of duty being 50 and duration of water being 5 months although the actual water consumed by the rice is less. Under the old inundation condition the delta of water for rice crop in the Larkana experiments amounted to 42″ for kangni and 60″ for the Sugdasi rice with a duty of 40 and duration of 72 and 96 days supply, respectively. It seems rainfall in the Karachi district makes up the deficiency to some extent. Rainfall would be only beneficial when the crop has been transplanted otherwise on the contrary, it is deterimental. Lands transplanted after rains have set in, give poor outturns. Delta of water applied to the rice crop on stiff soils in the United States of American is 60″.

VI. Suggestions and recommendations.

(1) *Substitution of the present rice varieties.*—(*a*) Every one knows that the motya variety at present grown in ' dhand ' is a very late variety taking about 120 days to ripen, hence this variety should be confined only to dhandhs and swamps and grown on as small a scale as possible. In most places it should be replaced by the Ganja variety.

(*b*) Ganja is the most common variety which is grown to the extent of 70 per cent. This variety ripens in 90 days and requires 55 days water supply from the time of transplanting. On the Pinyari canal system the duration canal water available for transplantation in 60 days (1st July to 1st September) on low lands, on such lands Ganja rice can be grown, but on high lands of Pinyari canal system and on other canals where duration of full supply level is only 45 days it is not safe to grow Ganja variety. In such places it is necessary to substitute early varieties of rice such as ' kharai Ganja ', Kambroo, Kangni and Sathrya varieties. Kangni variety would perhaps be best among early varieties mentioned above. This variety has been tried by several zamindars in the Karachi District and found to grow successfully and to ripen about 20 to 30 days earlier than Ganja variety, and can be grown on 45 days canal water supply. During the last season the Agricultural Department carried out varietal tests over ½ acre plots in 5 centres in Karachi district. The plots transplanted in the last week of July with Kangni variety ripened with a water supply of 45 days after transplanting. The plot of Tatta yielded only 10 maunds per acre and the Sujawal plot 27 maunds. The latter had been manured. Three plots of Kangni rice had been grown in Mirpur Bathoro taluka and they were transplanted in the first week of July and yielded on an average at the rate of 20 maunds per acre. This variety has the further advantage of having finer quality of white rice which would fetch higher price in the market than the red rice of Ganja variety. This recommendation has greatly appealed to the zamindars and 600 maunds of Kangni rice have been actually supplied by the Agricultural Department to the zamindars on the left bank for sowing during the ensuing season, through the Mukhtiarkars of Mirpur Bathoro, Sujawal and Shah Bunder, on cash payment. As regards the supply of the variety to the zamindars on the right bank, negotiations are going on.

(c) On canals where the duration of water supply is less than 45 days it would be advisable to grow expressly early and drought resistant varieties of rice such as "Chaliharo' which take about 45 to 50 days to ripen. The yield of this variety is rather low.

(2) *Water saving devices.*—Besides the cultivation of early types we must explore all ways and means to utilise the canal water to the best advantage. Hence any measure which would extend the duration of water from the time of transplanting to the close of inundation even by a few days would improve the present situation. These are (a) wherever practicable greater area should be sown as 'purani korur'. There is a considerable scope of extension in the direction and the zamindars at present are not taking the full advantage of this natural condition existing in this rice tract which is not commonly met with in other rice tracts, where soils are not so retentive.

(b) It is most essential that transplanting should be started without any loss of time as soon as full supply level is reached if it has not possible to do so earlier. It is also necessary to finish transplanting of the whole area in as short a time as possible so as to get a longer duration of canal water for the standing crop which should be sufficiently advanced to permit storage of water into the fields before inundation recedes. Hence wherever practicable seedlings should be raised in 'purani bejaran'. There is a great scope of extension in this direction also. But in places where seedlings cannot be sown in 'purani bejaran' have to be raised in new 'bejarans' as in Mirpur Bathoro taluka, it would be advisable to grow seedlings on katcha wells or as 'kamosha' so as to save about 15 days of canal water for transplantation. Seedlings take 3 weeks to be ready in new bejarans (seed sown deep with a drill and 3 weeks as Khamosha seed sown shallow on beds in which manure has been burnt).

(3) *Rotation of crop and fallows.*—It is advisable to divide the holding into blocks and not to grow more than two-thirds of holding under rice and thus concentrate the present supply of canal water on a limited area under rice. The rest of the area may be either left fallow or a rabi crop may be grown.

(4) *Dubari cultivation should be greatly encouraged.*—Wherever practicable matar, matri, and gram should be sown soon after the harvest of the rice crop. If it has not been possible to sow matar at this time, an adhawa crop of mung and maunh should be grown in February-March. As pointed out elsewhere dubari cultivation not only improves the physical condition of the soil but also improves the soil fertility. Hence this practice should be greatly pushed.

(5) *Cultivation of rabi crops.*—If the land is divided into blocks and enclosed by strong bunds, the surplus water available in the canals in the months of August and September when the river is at its highest flood level should be utilised wherever possible for rabi cultivation. It is often contented that rabi crops would not thrive specially on 'khokhar' (stiff) soils which do not retain moisture for long time and on land which are full of weeds. This is partly true, although with proper treatment even the most difficult lands can be made to grow other rabi crop. So far as I have been able to see and gather during the course of my tour there are soils in this tract which are gasar (sandy loams) admirably suited for rabi crops. I would recommend the trial of turio crop on soils which do not retain mois-

ture for long time as well as on soils which are mere retentive of moisture since this crop can be sown in September and is reaped in January before frost. Jambho could be grown on soils which are saltish. Barley is most suited for soils which are considered too light for wheat. Matar should be grown on any soil in order to grow any 'sailabi' rabi crop it is necessary to give heavy soaking of water and to plough the land several times followed by samar, which will prevent moisture from being lost. Seeds should be sown at the proper time. The land in lower Bathoro is rather saltish and unsuited for the most of rabi crops except Jambho. The Sujawal lands seem to be better and can grow good crop of barley and turio.

(6) *Extension of cultivation under dry crops.*—There is some scope ot cultivation of dry crops like Bajri and Til on the banks of canal and towards the head reaches on lift water aided by flow. This should be extended as far as possible. Dry crops cannot be grown on rice lands which are saltish and rather stiff and low lying.

(7) *Introduction of improved implements.*—There is a great scope of introducing improved ploughs and a clod crusher which would replace the ordinary wooden hammer used in breaking clods on rice lands.

VII. PROPOSALS FOR A TENTATIVE PROGRAMME OF AGRICULTURAL EXPERIMENTS TO BE CONDUCTED BY THE AGRICULTURAL DEPARTMENT IN THE KARACHI DISTRICT.

(1) *Testing of early varieties of rice.*—Lower Sind rices—(1) Kharai Ganja, (2) Kambroo, (3) Sathrya and (4) Chaliharo. Upper Sind rices (1) Kangni 27, (2) Singhro and (3) Red Kangro. Middle Sind rices—(1) Chapako and (2) Singhro.

These nine varieties should be tested on half acre scale in about 10 centres, if possible, scattered through out the district.

(2) *Trial of new crops both kharif and rabi (early maturing).*—Kharif (1) Castor, (2) Til and (3) Sun flower and (4) Jowar. Rabi oilseeds—(1) Torio, (2) Safflower, (3) Rape early types, (4) Jambho early type and (5) castor. Cereals—New types of barley and wheat. Miscellaneous—Plantago (Essphgol).

These crops also should be tried in half acre plots in about 10 centres.

(3) Trial of Dubari crops rice—(*a*) Rabi season—Gram and matar. (*b*) Adhawa season—Mung and Manh. (*c*) Control—No crop. These may be tested in 4 centres only.

(4) Introduction of improved ploughs and clod crusher.

(5) Investigation about green manure crops—

(*a*) Kharif season—Sann hemp, Guar and Indigo.

(*b*) Rabi season—(Dubari) Matar and gram.

(*c*) Adhawa season—(Dubari) Mung and Manh.

(6) Investigation into the methods of growing rice seedlings quickly.

(7) Breeding of early and prolific strains in Kharai Ganja and Sindhi Kambroo.

The first four items can be carried out in zamindari lands. For the last three items we shall have to take up a separate plot of land where all operations could be done with hired labour. The plot should be situated near the headquarters of the office working in the Karachi District.

ENCLOSURE No. II.

Area proposed to be taken up for Agricultural Station in Lower Sind.

Details of Na-kabuli area available in deh Morkhan, taluka Tatta on Narichach canal.

Survey No.				Area in acres A.	G.
155	..	..	..	1	15
156	..	..	..	4	15
157	..	..	..	3	9
158	..	..	..	6	8
159	..	..	..	4	22
160	..	..	..	5	6
161	..	..	..	24	10
172	..	..	..	6	5
173	..	..	..	4	0
319	..	..	..	4	22
192	..	..	..	4	5
478	..	..	..	4	17
473	..	..	..	2	11
479	..	..	..	6	13
480	..	..	..	7	22
481	..	..	..	5	5
482	..	..	..	3	36
483	..	..	..	3	17
484	..	..	..	2	12
497	..	..	..	4	28
498	..	..	..	5	39
499	..	..	..	5	27
500	..	..	..	5	24
501	..	..	..	7	39
502	..	..	..	2	39
504	..	..	..	6	0
505	..	..	..	5	22
503	..	..	..	3	4
520	..	..	..	2	17
521	..	..	..	1	10
175	..	..	..	2	35
513	..	..	..	362	38
523	..	..	..	31	26
489	..	..	..	3	12
490	..	..	..	5	9
491	..	..	..	5	39
492	..	..	..	5	36
493	..	..	..	7	9
494	..	..	..	5	30
495	..	..	..	9	21
496	..	..	..	6	18
				600	12
477	..	..	..	1	31
				602	3

ANNEXURE II.

COMMON PROGRAMME OF WORK OF THE DRY FARMING RESEARCH SCHEME AT HAGARI, SHOLAPUR, BIJAPUR AND RAICHUR, FROM THE 1ST APRIL 1940.

General.

The main work during the period of extension at all stations should be agronomic work which will enable the workers at all stations to evolve a system of farming capable of securing a crop even in a year of drought. This should be based on the results of intensive scientific experiments as well as field-scale trials to test its practical and economic aspect.

Investigation work in the soil and plant sections carried out at all stations should be modified. Items of the existing programme requiring confirmation or accummulation of further data may be continued. New items intended to throw light on certain problems that have arisen during the past four or five years' work may have to be taken up. But as far as possible academic or theoretical investigations should not be undertaken in future. The laboratory and pot-culture work should be such as will prove complementary to the agronomic programme.

Determination of soil moistures or soil-nitrates from the plots of the intensive experiment will be necessary to throw light on the reaction of the different treatments in different seasons. The plant work should be restricted to one or two important crops only.

Elaborate root-studies and extensive breeding work on numerous crops should be curtailed.

The present agronomic programme should be modified in the light of the above remarks. Items of work which have given conclusive results, either positive or negative, should be discontinued. Experiments which are not likely to give conclusive data should also be omitted.

Promising items of dry farming practice arising out of the research work so far done should be given a trial on cultivators' fields in the neighbourhood of the experiment stations in order to obtain additional data under varying conditions of soils and topography.

I. *Programme for Hagari, Sholapur, Bijapur and Raichur stations.*

The problem of Hagari, Raichur, Bijapur and Sholapur, is to grow successfully a Rabi crop—mostly jowar—on the conserved moisture received by the precarious rains of the South-West monsoon and the early rains of the North-East monsoon. The later showers in November or December may be entirely absent in many years.

(1) The soils at the three stations, *viz.*, Hagari, Raichur and Bijapur are deep and black while the black soils at Sholapur have limited depths varying from 9" to 24". From the experience of the past five years, the third soils type of Sholapur having less than 9" thickness will have to be left out being unsuitable for growing Rabi crops. The red soils of Raichur should also be left out as unsuitable for rabi crops.

(2) Laboratory studies have shown that all these deep black and medium deep soils are extremely clayey.

(3) Their capacity to hold moisture under field conditions is good.

(4) Most of the evaporation of moisture from these soils is restricted to the surface layer of 12″ and hence soils which are more than 24″ deep, if once saturated with moisture at sowing time, are capable of supplying enough moisture to the Rabi crop so as to bring it to maturity.

(5) The lands at three stations are subject to heavy run-off and erosion. In the case of Raichur station itself the run-off and erosion is limited but the tract is subject to erosion and run-off.

(6) Rate of penetration of rain-water is more or less of the same order in all these deep black soils. An inch of rain penetrates usually to a depth of 2″.

(7) All these soils have been found to respond to manuring with F. Y. M. and some to green manuring.

(8) Nitrogen and organic matter have been found to be deficient in all these soils.

(9) Mulching has resulted in giving higher yields and has also resulted in conserving more moisture in several seasons.

(10) Rotations have always given increased yield instead of the same crop year after year.

(11) Fallowing has been found to give much higher yields. In some cases the increase can compensate the loss of a crop in the alternate year.

Taking into consideration all the available data about soils, plants and agronomic work, the common programme that may be suggested would be as follows :—

The new common agronomic programme should have two parts, (I) the intensive experiment with randomised replications which would allow statistical computation, and the (II) the field scale trial of the most promising items for securing the crop. For comparison, there should be field scale trial of the cultivators' method.

(I) In the intensive experiments there will be one or two complex experiments. Its exact lay-out would be settled in consultation with the Statistician to the Imperial Council of Agricultural Research. The following items which seem to be on the whole promising at all stations should be included in these experiments. The common crop to be grown should be jowar at all stations.

(1) Alternate year ploughing *versus* only harrowing.

(2) Bunding *versus* no bunding.

(3) Mulching before and after the crop *versus* less mulching.

(4) F. Y. M. addition or green manuring *versus* no manuring.

(5) Rotation, *versus* single crop.

The seed-rate of 4 lbs. per acre should be common and the distance between rows should be 18″. The variety that has succeeded in most

places, *viz.*, M-47-3 should be used at all stations. If the Madras station wants they may try some of these items for growing Italian millets in addition to the jowar as above.

(II) The field scale trial should be made at every station on as large an area as possible. This would give opportunity to the workers to understand the practical difficulties likely to be encountered by the cultivators.

An area of 20 acres should be selected for this purpose. The whole area should be bunded on contours in such a manner that the area is divided into several compartments of different sizes varying from ¼th of an acre to 1 acre. Waste-weirs should be provided where necessary of suitable dimensions. The sizes of bunds and the spacing of bunds would vary according to gradients and the area of the plot.

On this developed area the following items of cultivation should be tried.

(1) Ploughing once in three years with iron plough. One-third of the area should be ploughed every year.

(2) Four harrowings during the early monsoon before sowing.

(3) Manuring with F. Y. M. with 5 cartloads per acre, or putting in sann green manure where possible.

(4) Sowing at the rate of 4 lbs. per acre with a wide-drill having its coulters 18″ apart.

(5) Three to four interculturings.

(6) *Rotation.*—In order to get the advantage of rotation, the above area may be divided into 2 or 3 divisions. Cotton should be sown on one division which will rotate with jowar in the following year. This seems possible at Hagari, Raichur, and Bijapur. At Sholapur, cotton is not likely to succeed But on some area say one-third, gram may be taken in rotation. At Hagari one-third the area should be under setaria.

(7) *Fallowing.*—As an insurance against famine in order to secure a crop even in a year of drought it is proposed that an area of at least 3 to 4 acres should be kept clean fallow every year which will give a crop in the following year. Every year there should be 3 acres area kept fallow.

For comparison the local cultivators' method should be tried on an area of 5 acres at each station.

(1) There should be no bunding and no division into compartments.

(2) One-third of the area should be ploughed with the cultivators' plough (Wooden only) in stations where the practice of ploughing exists.

(3) Only two harrowings to be given.

(4) Sown with a local drill at the local seed-rate.

(6 lbs. with 12″ drill).

(5) Only one or two interculturings.

(6) Local rotation should be followed, dividing the area into 2 or 3 divisions growing different crops.

If the above work is carried on simultaneously by the four stations during the period of extension it is believed that enough data would be available which would enable the workers to prescribe a final system which can be advocated to cultivators with confidence.

Cost data of these large scale trials should be furnished and a balance sheet prepared every year at each station.

II. *Programme for Rohtak station.*

At Rohtak, the most important problem seems to be to obtain the Bajra crop successfully during the kharif season. A leguminous crop can also be taken in the Rabi season of the same year. The results obtained so far are quite promising.

(1) The soils are sandy loams or silt loams. They are more level than those of the other stations.

(2) Physically and chemically they are quite suitable for the growing of cereals followed by a legume.

(3) They always respond to manuring.

(4) Inspite of level character, bunding has always shown advantage over no bunds. But smaller bunds would be quite sufficient on account of the level character, and easy penetration of rain-water and the nature of rainfall during Kharif.

(5) and (6). Rotation and fallowing have both responded on these soils.

The programme of work should also consist of two divisions, *viz.*, the intensive and the extensive.

I. In the first division a complex experiment should be tried to include some of the most important items as mentioned below :—

(1) Bunding *versus* no bunding.

(2) Addition of F. Y. M. at 2½ tons every year *versus* no manure.

(3) Mulching *versus* no mulching.

(4) Two rotations. (In consultation with the Rohtak representative).

In one case a cereal or cotton should be tried in one year. The other year should include a cereal followed by a legume in Rabi season of the same year. Ploughing should be a basic treatment for all.

II. In the second division, large scale growing of Bajra in Kharif to be followed by a legume in Rabi season of the same year on an area of 20 acres should be tried. The area should be nearest the size of the average holding in the tract.

The following items should form the treatment :—

(1) The whole area should be bunded on contours and plotted.

(2) Annual ploughing with the most efficient plough.

(3) Addition of F. Y. M. at 2½ tons per acre.

L223ICAR

(4) Sowing with the best available Bajra strain at moderate seed-rate with wider drills to facilitate interculturing in Kharif and best gram strain in the Rabi season of the same year.

(5) Interculturing the crop 3 times during Kharif.

(6) Rotation should be included so as to have Bajra and legume at least on half an area while the other half should grow only one crop in the year, this area being clean fallowed in the remaining season.

For comparison, on an area of five acres local cultivators' method should be followed for growing of Bajra to be followed by a legume. The area should not be bunded or divided into compartments. It should receive the same operations which a zamindar follows in his field. If there be any rotation followed by him the same should be followed on a part of the area.

Cost data of these large scale trials should be collected and a balance-sheet prepared every year.

ANNEXURE III.

NOTE BY THE AGRICULTURAL COMMISSIONER WITH THE GOVERNMENT OF INDIA.

There is only one part of the scheme which is, strictly speaking, "dry farming". That is the part dealing with "barani" areas with a rainfall of 4 to 6 inches a year. These are extreme conditions, but such conditions are widespread over a great area of the Sind-Rajputana desert and do need attention.

With so little rainfall, the problem seems very difficult, but the point to remember is that the rain when it comes (as it came in Jodhpur and Ajmer this year) may be as much as an inch in one day. This means that the cultivation must be opportunist and that the preparation of the soil must be such as to hold the *whole* of this water when it comes, and the agricultural arrangements such as to utilise it to the fullest advantage, including means for increasing the water-holding power of the soil.

There is also to be considered the possibility of storing up in the soil the rainfall of two or even three successive years before taking a crop. This needs a set of carefully planned experiments with some means of estimating soil moisture at different depths yearly.

Then there is the use of deep rooted drought-resistant varieties wide sowing intercultivation.

All the above is legitimate and necessary work but requires a scheme with such clearly defined objects and a staff with duties which clearly bear on these questions.

The other two parts of the scheme deal with a form of cultivation in which irrigation water is available but in limited quantity. Problems connected with this type of cultivation have been tackled before and Howard in one of his bulletins showed how it was possible to grow a crop of wheat in Baluchistan on one watering only. Previous knowledge

and experiments on this aspect have not been sufficiently cited, and the objects and methods of the work are rather vaguely stated.

The problem is undoubtedly an important one. There is no special reason for preventing its being made a part of a scheme in which true "dry farming" also figures, and the results obtained from the parts of the scheme which include irrigation would also be helpful to the Sind-Rajputana desert area in places where some, though only a little, irrigation water is available.

It is necessary to enquire whether the necessary data have not already been obtained in the Punjab or are likely to be obtained from the irrigation research scheme started at Risalewala.

APPENDIX LXVI.

Note on Subject No. 28 (a) :—Technical programme of work of the scheme on problems relating to coastal soils.

The scheme of research on problems relating to coastal soils was considered by the Advisory Board in March 1938 (pages 53, 377 and 381—385 of the printed proceedings) and sanctioned by the Governing Body in July 1938. Funds were allotted to the scheme in March 1939 and it was proposed to initiate it from 1st September 1939. The attached technical programme of work (Annexure) received from Professor J. N. Mukherjee is now for the consideration of the Board. As usual it will first be considered by the Soil Science Committee whose report will be circulated to the Board in due course.

ANNEXURE.

COPY OF A D.-O. LETTER No. 324|G.P.-39, DATED THE 25TH AUGUST 1939, FROM PROF. J. N. MUKHERJEE, UNIVERSITY COLLEGE OF SCIENCE AND TECHNOLOGY, CALCUTTA, TO THE SECRETARY, IMPERIAL COUNCIL OF AGRICULTURAL RESEARCH, SIMLA.

Re. Scheme of work on problems relating to coastal soils.

With reference to your letter No. F.-154|38-A.I., dated the 10th August 1939, I enclose herewith the programme of work for the period from 1st September, 1939 to 31st August, 1942.

The programme may require to be modified in the light of the results obtained during the course of investigations. It is also difficult at this stage to draw up a detailed programme for the third year which should preferably be drawn up in the light of results obtained during the two years preceding it. Modifications, if necessary, will be proposed, in due course.

SCHEME OF WORK ON PROBLEMS RELATING TO COASTAL SOILS.

Technical programme for the period 1st September, 1939 to 31st August 1942.

It is intended to take up the work on the pan soils of the Bakharganj District, Bengal, during the first year and work on the same lines will be undertaken in the second year with similar soils occurring in the 24-Parganas, Bengal.

It is proposed to survey and examine the soils of four localities in each year. The localities will be chosen so as to cover regions near the sea board and also those situated inland. close to and away, from, rivers or canals. Attention will also be paid to special features and it may be necessary to work in more than four localities in each district.

The snrvey in the first instance will be of an intensive character restricted to the Bengal Government Farm at Barisal and its neighbourhood. About four soil monoliths will be collected in this region. About 20 to 30 soil samples will be taken from each locality.

Details of laboratory examinations (same as those mentioned in the programme previously submitted) are given below :—

First Assistant Soil Chemist : (Survey work and Field experiments).

(1) Survey of the extent of occurrence of pans and the depths where they occur and their thickness.

(2) Collection of information regarding vegetation, topography, drainage condition, fluctuations of the water table and any special features of soils in these areas.

(3) Morphological examination of profiles and collection of soil samples, from different layers or depths of the profile, and soil solutions. Preparation and preservation of soil monoliths.

(4) Determination of (*a*) Pore space, (*b*) pH and specific conductivity of soil extracts as also of well water, (*c*) carbonates, chlorides and sulphates (qualitative), (*d*) moisture, (*e*) loss on ignition, (*f*) deflocculation and related studies on the pan materials.

(5) Preliminary analysis of displaced soil solution.

*Second Assistant Soil Chemist** : (Colloid Chemical Work).

(1) Aggregate and mechanical analysis of soil samples.

(2) Chemical analysis including fusion analysis, analysis of HCl, citric acid and water extracts, estimation of carbon, nitrogen and carbonates.

(3) Analysis for calcareous and ferruginous concretions, if any, in pan soils.

(4) Determination of exchangeable bases (total and individual), base exchange capacity and exchangeable hydrogen.

**(5) Investigations on pan-material-exact scope will be decided at the end of the preliminary work.

(6) Fuller analysis of soil solution.

Field observations such as fluctuations of water table, state of water logging, variations in salinity require to be made throughout the entire period.

During the third year it may be necessary to examine some other localities showing special features, if any, noticed during the previous two years. An attempt will, however, be made to take up the following additional items.

(1) Artificial formation of pans simulating as far as possible the natural ones.

(2) Trial experiments on ameliorative measures suggested by the survey and laboratory investigations.

Details regarding the above two items will be submitted when the progress of the investigations admits of this being done.

---

*It would be desirable and perhaps necessary at times for him to take part in the field work and for the other assistant work in the laboratory.

APPENDIX LXVII.

Note on Subject No. 28 (d) :—Technical programme of work under the extension scheme for research at the Dacca University on the Nutrition of the rice plant with special reference to the nitrogen supply.

The technical programme of work received from the Dacca University in connection with the extension of the scheme of research on the nutrition of the *rice plant with special reference to nitrogen supply*, is attached for consideration (Annexure). The proposal to extend the scheme was considered and recommended by the Advisory Board in May 1939.

2. The programme will first be considered by the Soil Science Committee whose report will be circulated to the Board in due course.

ANNEXURE.

TECHNICAL PROGRAMME OF THE WORK TO BE DONE UNDER THE SCHEME OF RESEARCH ON THE NUTRITION OF THE RICE PLANT WITH SPECIAL REFERENCE TO THE NITROGEN SUPPLY (Till the 31st March 1942).

The following investigations will be undertaken :—

(1) *Effect of different fertilizers treatment on the fixation of N in the soils of rice-field under water-logged conditions (by algæ).*

The following treatments are suggested :

(a) K_2 SO_4.

(b) Ca_3 $(PO_4)_2$.

(c) K_2 SO_4 + Ca_3 $(PO_4)_2$.

(d) Organic manures of different C : N ratios e.g. rice straw, farm yard manure, green manuring by leguminous crops, etc.

The above investigation will be extended by a study of the relation between the chemical composition of the soils and their nitrogen fixing capacities under water-logged conditions.

Soils will be analysed for total Ca, K, and P_2 O_5, available K and P, and exchangeable Ca with a view to finding out whether the amounts of N fixed in different soils bear any relationship to any of the above constituents.

(2) Relation between rice-crop and algal growth.

Two experiments will be performed in this connection.

In the first a series of soil cultures (15 gm of soil and 100 cc. of water or a nitrogen-free solution) will be set up, some of which will be cropped. Determination of the amounts of N fixed in the two series of cultures. (One cropped and the other uncropped) will be made after a suitable interval, and the results will indicate the influence of the crop on the N-fixation in the rice-field (by algæ).

In the second experiment, rice plants will be grown in a series of pots containing soils. By some suitable arrangement, soil in some of the pots will be kept in the dark (leaving the plants in the light) so as to prevent the algal growth. Determination of the crop yields in the two series of pots (one in which the soil is kept in the dark and the other in

light) will show the effect of an abundant algal growth in the fields on the growth of rice plants.

(3) Effect of algal growth on various transformations taking place in the rice-fields.

In this investigation, two series of soil cultures—One in the dark (no algæ) and the other in the light (algæ)—will be periodically examined for (a) dissolved Fe, Mn, O and CO_2 (b) Changes in NH_3 contents and bacterial numbers and (c) available K and P contents.

(4) Study of the fixation of N in rice-fields under dry cultivated condition.

In this investigation soil samples will be periodically collected from fields when they remain dry and analysed for total N. The experiment will be designed in consultation with the Statistician, of the Imperial Council of Agricultural Research.

[See Sir John Russell's report (page 163) on the investigations of the nitrogen cycle in paddy soils.]

In the Soil Science Committee held at Simla, Rao Bahadur Viswanath suggested that further study of the problem should include an investigation on the effect of algal growth in the field on the yield of the crop. He advised that the samples of algal film should be collected from various stations and examined with a view to correlate the existence of algæ with crop-yield. While making this suggestion, Rao Bahadur was apparently under the impression that this scheme will have been extended for a further period of five years, since investigations involving crop-yields are not likely to lead to definite conclusions, unless data are collected over a number of years. In view of the fact that the scheme has now been extended till 31st March 1942, it is necessary that the Soil Science Committee should reconsider this matter. If, however, on further consideration, it is decided that this aspect of the investigation should be taken up, it is requested that the I. C. A. R. may kindly give me facilities to visit various stations for collection of algal samples, or alternatively, they may arrange with those stations to send me the samples and the data for crop-yield of the plots from which the samples are collected.

APPENDIX LXVIII.

Note on Subject No. 28(e) :—Technical programme of work of the scheme of sub-surface investigation work in the Lloyd Barrage Area in Sind.

The attached technical programme (Annexure) of work received from the Government of Sind in connection with the Scheme of sub-surface investigation work in the Lloyd Barrage Area, is for the consideration of the Board. The Scheme was recommended by the Board at its meeting held in May 1939. Subject to the annual research grant of the Council being voted by the Central Legislature, funds will be allocated to the Scheme early next year.

2. The programme will first be considered by the Soil Science Committee whose report will be circulated to the Board in due course.

ANNEXURE.

A DETAILED PROGRAMME OF THE PROPOSED TECHNICAL WORK TO BE DONE IN THE RESEARCH LABORATORY.

I.—The programme of work.

The programme of work, details of which are given below is proposed to be carried out in addition to the usual chemical, physical and mechanical work done in the Laboratory, on grant of funds by the Imperial Council of Agricultural Research. The proposed work falls under the two main heads :—

A. The study of soils on the bases of profile development to arrive at a scientific system of soil classification necessary for agricultural development and for predicting the behaviour of soil under irrigation.

B. (1) Investigations into the subsoils to study the seasonal movements of salts in soil profile.

(2) The composition of irrigation water and its effect on the chemical and physical properties of soil profile and the chemical composition of subsoil water.

(3) The influence of subsoil water on the moisture and salts of a soil profile.

II.—Methods of Investigations.

Item No. A will embody the following series of investigations :—

(1) Movement of various acids and bases in soil columns of different textures.

(2) Study of the distribution of soil colloids in the different horizons of a soil profile.

(3) Availability of food materials and the Bulk chemical analysis of soils in top 3 ft. columns.

(4) Estimation of exchangeable bases and total base saturation capacities.

(5) Estimation of clay fraction and its chemical analysis.

Item B.—This will comprise of the following investigations :—

(1) Study of the relation of various bases (Ca, Mg, Na and K) in irrigation water to those in soil profiles before and after irrigation.

(2) The composition of irrigation water and its effect on the chemical and physical properties of soil profile and the chemical composition of subsoil water.

(3) Study of influence of the subsoil water on the moisture content and the salt distribution in soil profiles.

III.—Technique and procedure to be adopted.

A. (1) *Movement of various acids and bases in soil columns of different textures.*—The various acids and bases usually met with in soils are the Sulphates, Chlorides, Carbonates and Calcium, Magnesium, Sodium and Potassium, respectively.

The soil samples at every 1′ depth of soil profiles will be subjected to volumetric and gravimetric estimation of each of the above, after obtaining their water extracts or Soil Solutions.

(2) *Study of the distribution of soil colloids in the different horizons of soil profiles.*—The amonnt of colloidal matter in soils is extremely variable. Its influence however on soil conditions, especially as related to plants, is extremely important. This influence is exerted in a number of ways, modifying the physical and chemical properties as well as biological activities in soil. One important attribute imparted to soil by colloid development is high absorptive power.

The methods as described by W. Robinson and A. Joseph for estimating colloids will be adopted.

(3) *Availability of food materials and Bulk chemical analysis of soils.—The food materials are,* Nitrogen, Potash (K_2O), Phosphoric Acid (P_2O_5) and Calcium, and are respectively estimated as follows :—

(1) Nitrogen by the (*a*) Kjeldahls method or by the (*b*) Lunge's Nitrometer.

(2) Potash (K_2O) by the Platinic Chloride method.

(3) Phosphoric Acid or Phosphates by the Ammonium Molybdate method.

(4) Calcium/Lime—by means of Collin's Calcimeter or by Schrottir's apparatus.

Bulk chemical analysis of soils.—This is carried out by means of Hydroflouric Acid in a platinium dish or by fusion with sodium carbonate ($Na_2 Co_3$) and Potassium Carhonate ($K_2 Co_3$) thereby the total of any constituent or constituents is estimated. The method thus determines the total mineral constituents, *viz.*, the Sulphates, Chlorides, Calcium, Magnesium, Sesquioxides of Aluminum and Iron and Silica—in the soils, but tells us nothing regarding their availability to crops. For that purpose extraction methods given below are adopted :—

1. Digestion with strong Acids.
2. Digestion with dilute Acids.
3. Extraction with water.

4. *Estimation of exchangeable bases and total base saturation capacity of soils.*—Exchangeable bases of importance are Calcium, Magnesium, Sodium and Potassium. These are estimated by Hissink's or by Dr. Puri's method.

Total base saturation capacity is estimated by the Parker's Barium Hydroxide—Ammonium Chloride or Barium Acetate—Ammonium Chloride method.

5. *Estimation of clay fraction and its chemical analysis.*—This can be estimated in soils by employing a high speed centrifuge like Sharples super centrifuge and then analysing the clay fraction so obtained by the usual volumetric and gravimetric methods.

B. (1) *Study of the relation of various bases in irrigation water to those in soil profiles, before and after irrigation.*—This involves the estimation and correlation of the various bases—Ca, Mg, Na and K, as present in the irrigation water and in soil profiles, before and after irrigation, with a view to study the effect of irrigation on the physico-chemical properties of the soil.

(2) *The composition of irrigation water and its effect on the chemical and physical properties of subsoil water.*—This entails the usual chemical analysis of the irrigation water and the results to be correlated with those of the subsoil waters.

(3) *Study of influence of the subsoil water on the moisture content and the salt distribution in the soil profile.*—This entails moisture estimation by the usual method, at every foot of the profile from surface to the water table and their chemical analysis as compared to that of the subsoil water.

APPENDIX LXIX.

Note on Subject No. 28 (f) :—Technical programme of work under the extended scheme of research on the organic constituents of Indian soils at the Dacca University.

A copy of the technical programme of work under the extended scheme of research on the organic constituents of Indian soils at the Dacca University is attached (Annexure). The extension of the scheme was recommended by the Board in May 1939.

2. The technical programme will first be considered by the Soil Science Committee whose report will be circulated to the Board in due course.

ANNEXURE.

TECHNICAL PROGRAMME OF WORK ON THE ORGANIC CONSTITUENTS OF INDIAN SOILS AT THE DACCA UNIVERSITY.

The work under the extension scheme sanctioned recently by the Governing Body of the Imperial Council of Agricultural Research on the organic constituents of Indian soils at the Dacca University will be carried out by two research scholars, Messrs. H. D. Bhowmik and J. M. Sen, under the supervision and guidance of Dr. S. S. Guha Sircar, Reader in Chemistry, on the following lines :

Samples will be collected of soils from the Dacca Agricultural Farm on which manurial experiments of long standing have been carried out (*e.g.*, a number of green manured Aus paddy plots ; a number of high land Aus paddy plots on which ' catch crops ' have been ploughed in ; a number of green manured terrace plots growing transplanted paddy ; a number of Aus paddy plots on which only the tops of the crops were removed and the stubble incorporated). Humic and hymatomelanic acid portions of the organic matter in these soils will be isolated by standard methods, analysed for total C, H, N, ash, acetyle group, methoxyl group ; the pH of the suspensions of the acids will be found, the equivalent weights will be determined by the Ba salt method, by titration with barium and calcium hydroxides, with calcium acetate, and by conductometric titration. The action of H_2O_2, $KMnO_4$, ClO_2 on these will next be studied with a view to compare their stabilities towards oxidising agents and the product of oxidation will be isolated and identified if possible.

If time permits, samples of various typical soils of India will be treated in the same way and the properties of the isolated humic acids compared with those studied so far in this laboratory (Derby, Putida, Dacca).

It is hoped that informations on these points will indicate lines on which the problem of amelioration of Dacca soils may be tackled.

APPENDIX LXX.

Note on Subject No. 29 (a) :—Application from the Government of Bengal for a grant of Rs. 20,566 for extension of the scheme for the study of Soil Problems in Bengal for period of two years.

The present sanction for the scheme of soil problems in Bengal expires on the 30th June 1940 and the Government of Bengal have submitted proposals (Annexure I) for the extension of the scheme for a further period of two years at a cost of Rs. 20,566. The Provincial Government have since agreed, at the suggestion of the Council's Secretariat, to draw the following items for which provision has been made in these proposals :—

		Total cost for 2 years.
		Rs.
(i)	An assistant on Rs. 140 per mensem ..	3,360
(ii)	Leave salary at 1/22 of the period served	140
(iii)	One fieldman at Rs. 50 per mensem ..	1,200
(iv)	Leave salary at Rs. 1/22 of the period served	50
(v)	Laboratory attendant at Rs. 20 per mensem	480
(vi)	Increased provision under chemicals and apparatus at Rs. 250 *per annum*.	500
(vii)	Increased provision under travelling allowance at Rs. 900 *per annum*.	1,800
	Total ..	7,530

The cost of the extension proposal as modified will, therefore, be Rs. 13,036 spread over two years *vide* statement attached (Annexure II). The provision for leave salary made in the estimates is in accordance with the decision of the Council.

2. The previous extension of the scheme was considered by the Advisory Board in February 1936 (pages of the printed proceedings of the Board) when a grant of Rs. 27,720 spread over five years, with effect from June 1937 was approved. This recommendation was accepted by the Governing Body. It was however considered desirable that, pending the report of Sir John Russell on the future soil work under the Council, the extension of the scheme should be sanctioned for one year only so that it might terminate at the same time as the scheme for soil research conducted at the Dacca University with a grant from the Council. Later on, it was further extended for a period of two years upto the end of June 1940, the date on which the sanction for the Dacca University scheme was to expire. The Dacca University scheme has since been extended for a period of one year and 9 months from 1st July 1940.

3. The proposal is for the consideration of the Board. As usual, it will first be considered by the Soil Science Committee whose report will be circulated to the Board in due course.

ANNEXURE I.

GOVERNMENT OF BENGAL.

AGRICULTURE AND INDUSTRIES DEPARTMENT.

AGRICULTURE BRANCH.

No. 1382.

From

H. S. E. STEVENS, ESQ., C.I.E., I.C.S.,
Secretary to the Government of Bengal.

To

THE SECRETARY,
Imperial Council of Agricultural Research, Simla.

Calcutta, the 27th April 1939.

SIR,

I am directed to forward herewith for favour of inclusion in the agenda of the meeting of the Advisory Board to be held in May 1939, a copy of the marginally-noted scheme (Enclosure) which has been approved by the Bengal Provincial Agricultural Research Committee, together with a copy of the minutes of the meeting of the Committee held on the 22nd April 1939.

* * *
2. Proposal by the Department of Agriculture, Bengal for the extension of the scheme for studying soil problems in Bengal.
* * *

I am to say that Government recommended the schemes subject to the reservation that no financial liability will devolve on them except in respect of schemes Nos. (7) and (8) where they have accepted liability to the extent of half of the cost of the schemes.

The Superintendent, Government Printing, Bengal, has been asked to forward to you direct 150 spare copies of each of the schemes as soon as possible.

I have the honour to be,

SIR,

Your most obedient servant,

(Sd.) H. S. E. STEVENS,

Secretary to the Government of Bengal.

ENCLOSURE.

PROPOSAL BY THE DEPARTMENT OF AGRICULTURE, BENGAL, FOR THE EXTENSION OF THE SCHEME FOR STUDYING SOIL PROBLEMS IN BENGAL.

The scheme was sanctioned in 1931 and given effect to from July 1932. The scheme was originally sanctioned for a period of five years but subsequently extended for a further period of three years which terminates in July 1940.

The original scheme provided a Physical Chemist and grants for chemicals and apparatus and travelling allowance. A small non-recurring grant was also sanctioned towards the establishment and equipment of a Physical Section. In the extended scheme also no additional staff was

asked for. The varied nature of, the work being pursued in this section very often necessitated the requisition of extra hands from the Agricultural Chemist's section. In the present scheme, therefore, provision has been made for an Assistant and a Fieldman.

The work so far carried out under this scheme consists of the study of the physico-chemical problems connected with soil—the moisture relationship of soils with special reference to evaporation and retention—the dynamometric studies of soil texture and tillage—the water requirements of rice plants—the study of the movement of soil moisture under field conditions—the effect of lime on the red laterite soils, etc.

Summary of the main results.

The evaporation of water from soil is of fundamental importance in the study of the moisture relationship of soils. This problem has been investigated by a number of workers particularly by Keen[1] and Fisher[2] the bulk of which were directed at making a generalised study of the soil drying processes. Keen (J. Agri. Sc.) suggested an empirical formula to his time moisture curves of the type $w = ke^{A}\frac{dw}{dt}$ where $\frac{dw}{dt}$ is the time rate of evaporation. w is the moisture content of the soil and A and k are constant. But this formula does not exactly represent the experimental curves. The equation was, therefore, modified by them by introducing a shrinkage factor $\frac{dw}{dt} = 3\,(\frac{ws}{100}$ plus 100). This equation also does not represent the whole range of the evaporation curves. The experimental data can be fitted into the equation down to a moisture content of 3 per cent. They further suggested that the divergence between the observed and the calculated values were due to the capillary movement of water in the interior of the soil.

But it is extremely improbable that there is capillary movement down to a moisture content of 3 per cent. or less. It therefore postulates that the evaporation of water from soil is a complex process involving several factors of which the size and the shape of the particles on the one hand and colloids on the other are the most important. Although the soil itself is not a true colloid its particles of various sizes and shapes are covered with a colloidal coating and the soil water relationship is closely associated with this coating.

It has been assumed here that at high moisture content the evaporation of soil moisture is governed by the soil particles, while at low moisture content the colloids are responsible. The function and behaviour of the whole of moisture present in a soil at its maximum retaining capacity therefore should not be the same. At low moisture content the soil water relationship is associated with the colloids and the evapora-

(1) Keen B. A., 1914 J. Agri. Sc. 6, 456.
1921 J. Agri. Sc. 11, 433.
Keen Crouther & Conts, 1926. J. Agri. Sc. 16, 105.
(2) Fisher E. A., 1923 Roy. Soc. Proc. 103A, 139.
1924 Roy. Soc. Proc. 105A, 571.
1923 J. Agri. Sc. 13, 121.
1924 J. Agri. Sc. 14, 126.
1927 J. Agri. Sc. 17, 407.

tion of this water from the soil is governed by the physical laws of adsorption. On the basis of these assumptions a theoretical interpretation of the principle governing the evaporation of water from soil has been advanced (Annual Report, 1936-37).

The adsorped water, if any, will respond to the equation $\log (v - h) = kt$ plus k_2, deduced from Freundlech's adsorption isotherm. (Annual Report of the Physical Chemist for studying soil problems in Bengal, 1936-37.) The experimental data can be fitted into the equation up to a moisture content of 11 per cent, or less depending upon the nature of the soil. Above this limit the equation is inapplicable. When the logarithmic values of the moisture content are plotted against time the portion above 11 per cent. moisture content or so as the case may be consists of a curved portion, while below it the relation is linear. Evidently, therefore, the function and behaviour of the moisture represented by the two portions of the curves are quite different. The discontinuity of the logarithmic curves indicates the transition from one stage to the other. The significance of the moisture content at the transition point is very important as it represents the wilting point. The moisture content of the soil below the transition point is not available to the plants and it is at this point that the plants begin to wilt permanently.

The moisture content at the transition point (i.e., wilting point) has been found to be in close agreement with the figure calculated by Schoefield's method from PF measurement. The moisture content at the transition point corresponds to P 4·2.

The above consideration explains why it had not been possible for the previous workers to find out a generalised expression for the evaporation of water from soil and further that the soil adsorps a certain amount of moisture which is represented by the equation $\log (V - H) = kt + K_2$, and this adsorped moisture is not available to the crops hence the upper limit of the adsorped moisture is the point at which permanent wilting ensures. Although more elaborate work is needed on this line the present investigation points to the conclusion that for all practical purposes the transition point on the evaporation curve is the moisture content at which crops permanently wilt.

The red soils of the Madhupur jungle tracts, Bengal and Assam, which is a typical laterite tract is very poor in lime and phosphate and considerably rich in potash. This soil dries up to a very low moisture content during the dry season.

The soil has been found to respond to lime during the first few years. but later on deleterious effect has been noticed in all cases. A critical investigation was therefore made into the cause of the failure of crops in limed plots which is so treated for years together.

Lime has been shown to result in an ionic exchange between the added calcium and the native potassium and other bases essential for plant nutrients. The phosphate is also leached out of the top soil and accumulates in the lower layers. Thus the available mineral products and phosphate pass out of the reach of the plants resulting in a very poor yield.

The study of the moisture profile down to the water table have shown that the loss of moisture from a soil under field condition due to evaporation during the dry season is limited only to a depth of 2 feet or so.

Beyond 2 feet there is an equilibrium moisture zone which remains at the same moisture content throughout the cycle of changes during the year. It has also been shown that capillary movement of water starts from the surface and extends only to a depth of 2 feet or so and the depth of the equilibrium moisture zone is independent of the underground water table for all practical purposes.

Investigations into the physical properties of soil under field conditions which are directly responsible for the resistance offered to the passage of a cultivation implement through the soil has been initiated. During ploughing operation both the implemental and soil factors such as the mechanical composition, moisture content, manurial effect contribute towards the resistance that is overcome by the bullocks. Soil cohesion, plasticity and surface friction are also necessary factors in cultivation. The total resistance, both implemental and soil factors, can be effectively measured by means of a dynamometer. It was, therefore, necessary to separate the two groups of factors implemental and soil and to present the result in two groups.

Of the various soil factors the effect of moisture was studied in the first instance and the relation between the soil moisture and the resistance has been shown to be rectangular hyperbolic. The effect of manures on the resistance has also been studied which is only of preliminary nature.

Investigations on the water requirement of rice plants have shown that moisture content of the soil below 33 per cent. soil saturation capacity considerably reduces the yield of the paddy.

Although it had not been possible for the local Government to contribute anything towards the pay of the staff but the contribution in other items considerably compensates the quota. This includes laboratory facilities, special apparatus for the equipment of the physical laboratory, meteorological station with equipments, cultivation charges, seeds, manures and all labour charges, ordinary chemicals and apparatus, etc. If the scheme is extended the same share of expenditure will be borne by the local Government.

The scheme of work for which the extension is now asked for is given below for Council's perusal :—

(1) Evaporation of water from soil—How the rate of evaporation and retentive capacity of the soil are influenced by the various factors—The nature and function of the water present in the soil at its maximum retaining capacity—The actual phases in which the water exists in the soil.

Further studies on the wilting point on the light of the expression deduced here and Schocfield's Pf measurement.

(2) The main items in the study of the physical properties of soil under field condition are the different factors associated with tillage operation. This can be studied by means of a dynamometer. Studies on this line has already been initiated and a relation between the moisture content and the resistance has been established. The following points will now form the subject of investigation :—

(a) Effect of various manures on drought.

(b) Variation associated with the physical constants of different types of soil.

(3) Water requirement of crops is a complicated problem as it is interrelated with various factors, such as climatic conditions, cultivation methods, manuring, ground water table, soil characteristics, etc. Apart from the above, the other conditions remaining the same, the requirement varies as the plants pass from one stage to other during their life cycle. Investigations initiated in this section show that there are critical stages in the life cycle of rice plants when water plays an important rôle in determining the yield and it has also been found that soil moisture below 33 per cent. soil saturation capacity considerably reduces the yield. The addition of phosphate, however, to the soil minimise the water requirement. It is, therefore, proposed to push the study further so as to include other crops and the effect of manures.

(4) Studies on the optimum moisture requirement for a particular *crop with respect to various types of soil and manure.*

(5) The influence of soil water ratio on the crop yield and how this ratio is affected by the addition of manures.

It may be seen from the foregoing that investigations carried out under this scheme aims at making a generalised study of physico-chemical behaviour of soils in its various aspects with special reference to the moisture relationship and is, therefore, of great importance both practical and theoretical to the soil of India in general. The successful working of the scheme enumerated above is expected to solve many acute problems that face Indian agriculture. Therefore a proposal for extending the scheme for a further period of two years is submitted for the consideration of the Council.

The following share of recurring expenditure to be borne by the Imperial Council of Agricultural Research :—

	1st year	2nd year.
	Rs.	Rs.
Salaries of the Physical Chemist at Rs. 400 per month.**	4,800	4,800
Provision for leave at 1|22nd of the period served ..	218	218
Salaries of one Assistant at Rs. 140 per month ..	1,680	1,680
Provision for leave at 1|22nd of the period served..	70	70
Salaries of one Fieldman at Rs. 50 per month ..	600	600
Provision for leave at 1|22nd of the period served ..	25	25
Pay of one laboratory attendant at Rs. 25 per month**	300	300
Pay of one laboratory attendant at Rs. 20 per month.	240	240
Chemicals and apparatus	750	750
Travelling Allowances	1,500	1,500
Contingencies	100	100
Total ..	10,283	10,283

N.B.—In case of the Physical Chemist and the laboratory attendants marked,** they have been serving in the scheme for 7 years without any increment in pay and, in the case of the Physical Chemist, with 15 per cent. cut. For this reason the pay has been increased to Rs. 400 in one case and Rs. 25 per month in the case of the other.

ANNEXURE II.

Revised cost of the extension scheme for the study of soil problems in Bengal.

	Cost for two years.
	Rs.
1. Salary of the Physical Chemist at Rs. 400 per mensem	9,600
2. Provision for leave salary at 1/22nd of the period served	436
3. Pay of one Laboratory attendant at Rs. 25 per mensem	600
4. Chemicals and apparatus (Rs. 500 *per annum*) ..	1,000
5. Travelling Allowance (Rs. 600 *per annum*) ..	1,200
6. Contingencies (Rs. 100 *per annum*)	200
Total ..	13,036

APPENDIX LXXI.

Note on Subject No. 29 (b) :—Application from the Director, Indian Institute of Science, Bangalore, for extenson of the scheme of research for the preparation of cheap synthetic manure from town refuse and waste materials at a cost of Rs. 18,244 spread over three years from January 1940.

The original scheme involving an expenditure of Rs. 4,950 spread over two years was considered by the Advisory Board in January 1932 (pages 2 and 29—33 of the printed proceedings). Funds were allotted in December 1934 and the scheme was initiated on 2nd January 1935. The first period of sanction expired on 1st January 1937 and an application for extension for a further period of two years was considered by the Board in January 1937 (pages 42, 312 and 324—330 of the printed proceedings). The proposal was first examined by the Soil Science Committee which recommended extension for one year on the existing basis (cost Rs. 2,650) pending Sir John Russell's review of the work of the Council and the Advisory Board accepted this recommendation. An extension proposal was again considered by the Board in November 1937 (pages 90, 333-334 and 369—375 of the printed proceedings) and the scheme was further extended for a period of two years from 2nd January 1938 at a cost of Rs. 6,900. The existing sanction will thus expire on the 1st January 1940.

2. The attached application (Annexure) for a further extension of the scheme for a period of three years from 2nd January 1940 is now for the consideration of the Board. A progress report on the working of the scheme during the period January 1935 to December 1937 was placed before the Board in May 1939 and approved by it. As recommended by the Soil Science Committee in November 1937 when the last extension proposal was considered, Dr. C. N. Acharya, Biochemist in charge of the scheme has submitted a monograph on the results so far obtained from work on composts in India and it is at present under publication. The expenditure under the scheme has so far been only on account of the salary of the Biochemist, his retiring allowance and a provision of Rs. 300 per annum for raw materials, etc., during 1938 and 1939. In the proposal now before the Board, provision has been made for the following new items :—

	Cost for 3 years.
	Rs.
1. Salary of Assistant to the Biochemist in the grade of Rs. 80—10—100	3,240
2. Retiring allowance for the Assistant Biochemist ..	324
3. Special grant for Pilot Plant for night-soil Wood Ash Poudrette	1,000

3. The proposal will first be considered by the Soil Science Committee whose report will be circulated to the Board in due course.

ANNEXURE.

LETTER FROM THE DIRECTOR, INDIAN INSTITUTE OF SCIENCE, BANGALORE, No. D./663, DATED THE 5TH SEPTEMBER 1939.

I have the honour to request that the Imperial Council of Agricultural Research may be pleased to sanction an extension of the scheme of research on the "Preparation of Cheap Synthetic Manure from Town Refuse and other Waste Material" for another period of 3 years with effect from 1st January 1940. The subject is of great practical importance; and Dr. C. N. Acharya who has been in charge of this investigation has, at the suggestion of the Imperial Council of Agricultural Research, prepared a monograph on the subject which has been already submitted to the Imperial Council of Agricultural Research for favour of publication. As it has been made clear in that monograph, it appears that further investigations on this subject are necessary in order to clear up the point raised by Sir John Russell that he could "find little direct evidence as to the fertilizer value of compost as compared with cakes or artificial fertilizers".

This Institute will bear all the incidental expenses in connection with the scheme and also will appoint a superviser to look after the pot and plot experiments. The cost of water which will come up to Rs. 500 every year will also be borne by the Institute.

LETTER FROM DR. C. N. ACHARYA, M.Sc., PH.D., A.I.C., BIOCHEMIST, "COMPOST RESEARCH", I. C. A. R., INDIAN INSTITUTE OF SCIENCE, BANGALORE, TO THE DIRECTOR, INDIAN INSTITUTE OF SCIENCE, BANGALORE, (THROUGH THE HEAD OF THE DEPARTMENT OF BIOCHEMISTRY, INDIAN INSTITUTE OF SCIENCE, BANGALORE), DATED THE 30TH AUGUST 1939.

I have the honour to submit herewith an application for extension of the Scheme of Research of the I. C. A. R. on the "Preparation of Cheap Synthetic Manure from Town Refuse and other Waste Material" which is now in progress at this Institute and is due to expire by 31st December 1939, and to request that you will kindly forward the same to the I. C. A. R. with your recommendations.

Thanking you.

Application for Extension of the Scheme for the Preparation of Cheap Synthetic Manure from Town Refuse and other Waste Material.

Work under this scheme was started in January 1935, with a view to devise a cheap and efficient method for the conversion of town refuse and other waste material into good quality agricultural manure. Aerobic method of composting, as ordinarily practised in this country, were found to involve heavy losses of nitrogen and of organic matter, especially while dealing with a nitrogen-rich waste material such as night-soil. Such aerobic methods also involve heavy labour charges in turning the material over a number of times and require large additions of water for keeping the heaps moist. Attention was, therefore, paid to evolving a method which would economise labour and water requirements and at the same time conserve as much of the nitrogen as possible and yield a satisfactory recovery of good quality manure.

A consolidated (printed) Report of the investigations carried on in this direction during the first three years of the scheme, *i.e.*, for the period January 1935 to December 1937, was presented at the meeting of the Advisory Body (and of the Soil Science Committee) of the I. C. A. R. held in May 1939. These investigations have helped to develop an improved process of composting, incorporating the principle of 'hot' fermentation and satisfactorily fulfilling the requirements noted above. Chemcial analysis in the laboratory and manurial trials in the field with various crops. have shown that the composts prepared by the Process possessed a higher manurial value than those obtained by the aerobic methods ordinarily in use. The nitrogen content of the hot fermented manure was definitely higher and better crop responses were obtained with that manure.

Sir John Russell, in his recent Report on the working of the I. C. A. R. schemes, observed in relation to compost research that he could "find little direct evidence as to the fertilizer value of compost as compared with cakes or artificial fertilizers" and recommended that with a view to chalk out a definite plan of investigation in the field, the results obtained so far in relation to compost work in this country might be brought together in the form of a Monograph "which could serve as a basis for discussion *and further experiment*".

The Soil Science Committee of the I. C. A. R. while recommending an extension of the present scheme for two years from January 1938, suggested that (*a*) the preparation of the above Monograph should be taken on hand immediately, and (*b*) the hot fermentation process, found to be suitable for the treatment of town wastes, should be tried on agricultural wastes, especially those of a resistant nature such as sugarcane trash, cotton stalks, etc.

(*a*) *Monograph.*—In September 1938, the I. C. A. R. approved of the preparation of the Monograph by Dr. C. N. Acharya, the Biochemist-in-charge of the Scheme. Dr. Acharya has since been able to collect a great deal of unpublished data and information relating to work on composts carried out by various provincial Departments of Agriculture, Agricultural Institutes and Municipalities in India. These have been embodied in a Monograph entitled "Composting of Farm and Town Wastes in India", the Mss. of which was sent to the I. C. A. R. in July last and is under publication.

A great deal of valuable and otherwise unavailable data has also been incidentally collected from nearly 150 Municipalities in India regarding the quantities of town wastes collected by them and the methods of disposal of such wastes at present adopted by the Municipalities concerned. The above information is being tabulated and written up for the purpose of publication as a separate Bulletin.

(*b*) *Agricultural Wastes.*—At the suggestion of the Soil Science Committee (I. C. A. R.), work under the scheme has been extended so as to test the applicability of the Bangalore (Hot Fermentation) Process to the treatment of farm wastes, and interesting results have been obtained. It has been found that the Process is particularly suitable for the composting of mixed farm wastes in an efficient manner, so as to conserve the nitrogen and organic matter to a satisfactory extent. Full details of the Process as worked out for the treatment of mixed farm wastes, have been

given as one of the appendices to the Monograph on Composts above referred to.

Field trials are at present in progress with a view to measure the manurial value of such hot fermented composts prepared from farm refuse, in comparison with aerobically prepared composts, using different types of crops such as ragi (*Eleusine coracana*). Jowar (*Sorghum vulgare*), cotton, groundnut, vegetables such as tomato, beans, etc. These plot trials have been framed on a statistical basis and are expected to yield results of definite value in determining the manurial or "Fertilizer" value of composts in general and of the hot fermented manure in particular.

Work has recently been started for testing the suitability of the Bangalore Process for composting the more resistant types of farm wastes such as sugarcane trash and cotton stalks. The composts are still maturing but the indications so far obtained go to show that when such resistant materials are suitably pre-treated by being split up where necessary and are admixed with easily decomposable materials such as weeds and grass, they are satisfactorily decomposed by the above Process. Data regarding chemical composition of composts prepared from the above materials and their manurial behaviour in the field, will be available early in 1940.

Future work.—(1) *Fertilizer value or availability of plant nutrients in compost.*—As shown in the Monograph that has been prepared on the subject, the evidence at present available in the different parts of India in regard to the manurial value of compost is of a conflicting nature. Thus, the Tocklai Experimental Station (Assam) find that composts prepared according to the Indore and Dacca methods show a much poorer manurial effect on Tea than the uncomposted raw materials themselves. A compost prepared from bamboo leaves and cattle manure and containing about 1 per cent. of nitrogen failed to show any beneficial effect on Tea. Similar has been the experience with cotton in Tinnevelly and with Jowar in the Hyderabad State, using composts prepared from sann-hemp and mixed farm wastes respectively. At the Allahabad Agricultural Institute and in Bihar, composts actually depressed the growth and yield of rice and marua. But, on the other hand, the experience in the vast majority of other areas such as Mysore State, Travancore, Indore, Coimbatore, United Provinces, Punjab, etc., has been that composts show a satisfactory and in some cases remarkably good crop responses. In some of these cases the beneficial effect might have been due to the poverty of the local soils in organic matter and the physical improvement caused by the addition of the organic matter contained in composts. But in most of the other cases, the beneficial effect must have been due to the "manurial" or "fertilizer" role of composts, *i.e.*, as a supplier of plant nutrients such as nitrogen, potash and phosphoric acid, though definite experiments have not been carried out to differentiate between the two roles of compost manure.

As remarked by Sir John Russell, there is little direct evidence available in this country at present bearing on this question of the "manurial" or "fertilizer" role of composts. It is generally admitted that nitrogen and phosphoric acid are the chief nutrient elements determining the fertilizer value of a compost, under Indian conditions, and it is also well-known that the availability of these constituents is low in composts, due to their being present in resistant organic combinations which demospose only very slowly in the soil.

Very little work has been done either in India or abroad to study the factors which limit the availability of the nutrients present in composts to plant growth or to devise methods for differentiating between the available and unavailable fractions of such plant nutrients.

The solution of the above problem is of great practical and immediate importance, in view of the great amount of energy and funds that are at present being spent by farmers, estate owners, municipalities and Government departments in the preparation of composts and their application to crops. Some satisfactory knowledge of the difference in chemcial composition of composts which are manurially good and those which are manurially useless and the devising of a satisfactory laboratory method for differentiating between available and unavailable fractions of nitrogen and phosphoric acid in composts would be of great value in controlling the composting process so as to prepare composts of the maximum manurial value possible.

It is proposed to tackle this problem by a combination of laboratory and field experiments planned on a proper statistical basis. The laboratory experiments would include detailed chemcial analysis by means of different reagents, so as to subdivide the total nitrogen into different fractions of increasing availability. The values so obtained will be correlated with the actual amounts that are absorbed by crops in plot experiments. A detailed plan of the experiments would be submitted later, after consultation with the Statistician, if the I. C. A. R. approve of the scope of the investigations.

(2) *Composted* vs. *Uncomposted materials and degree of composting necessary.*—Secondly, there is at present considerable difference of opinion among scientists both in this country and abroad regarding the extent to which raw materials should be fermented before they are fit for application to land as manure, and whether it is necessary to ferment them at all. The available evidence bearing on this point has also been presented in the *Monograph.* The experiments conducted by the Tocklai Experimental Station (Assam) have shown, for instance, that if the raw material and the nitrogenous starter used for composting be applied to the land directly, without being composted, they give a better crop yield than after the materials are composted. At Rothamsted a series of field experiments have been in progress for some years comparing uncomposted straw *plus* artificials against the same after composting. The results so far obtained go to show that the uncomposted material when supplemented with the nitrogenous starter, is equal in value to the compost prepared therefrom.

The above results are in apparent contradiction to the experience of workers in India and abroad (*vide* Hutchinson, H. B., *Jour. of Agric. Sci.*, *9*, 1918, p. 92, Jenkins, "Organic Manures") that undecomposed materials exert a harmful effect on plant growth by lowering soil nitrates, especially if the C : N ratio of the added material is wider than 20 : 1. Howard and others have laid great stress on the proper decomposition of the raw materials and have obtained beneficial effects only by the use of such well decomposed material.

The problem is one which goes to the root of composting and is of great economic importance to the farmer, since it may mean a considerable saving in labour charges, water supply and incidental expenses in preparing

compost, if it be really proved that the fermentation could with advantage be stopped at an early stage or that it is unnecessary to subject the materials to any fermentation at all but it would be enough to bring the C : N ratio to the desired level by additions of nitrogenous supplements.

It is proposed to tackle this problem by subjecting raw materials to different degrees of decomposition along with a nitrogenous starter such as dung, urine, night-soil or artificials and then examine the manurial values of the products so obtained. The nature of the raw material taken, the crop on which the manurial value is tried and other factors such as soil moisture, etc., will also be varied and special attention will be paid to the changes in total and "available" nitrogen in the different systems. A detailed plan of the field experiments will be submitted later, after consultation with the Statistician to the I. C. A. R. if the general lines of the investigation be approved.

(3) *Night-soil Wood Ash Poudrette*.—Another promising line of work relating to the conversion of town wastes into manure, which was referred to in the Triennial Progress Report for the period ending December 1937 and which awaits further development on the large scale is the Process for the rapid conversion of night soil into an inocuous dry product by admixture with dry household (wood) ash. It has been already reported that the Process is simple and hygienic and yields a dry ash-like powder which is free from night-soil odour and does not offend sentiment in handling it. Further work carried out since the submission of the above Report has shown that the efficiency of the Process could be greatly increased by carrying out the reaction at higher temperatures near 60—70°C. which could be secured by a mild prior heating of the wood ash, and the deodorizing of the product could be carried to a satisfactory stage by the addition of suitable reagents, cheap in price. It is proposed to try the method on a semi-commercial scale with a pilot plant containing an incinerator or heater for subjecting the wood ash to preliminary heating and a rotary mixer which would mix the hot wood ash with night-soil at a temperature of 60 to 70°C. in suitable proportions such that the product gets dried automatically and is converted into a friable powder which is immediately ready for being packed in bags and for sale as manure. In addition to technical details of operation, chemical factors such as the conservation of nitrogen in the above process and the chemical composition of the manure obtained, hygienic factors such as the extent of deodorization produced, absence of fly breeding, destruction of pathogenic organisms, etc., and agronomic factors such as the manurial value in the field of the product obtained, have got to be further examined.

When the several factors influencing the process are standardised, it is expected that the method can be operated by a compact plant occupying a small space and producing a high quality manure which can be easily transported and sold over a wide area. On account of the perfect hygienic control possible in the Process, the proposed poudrette plant could be situated quite near municipal limits and thus help to convert about 1,250,000 tons of night-soil now going to waste in our municipalities in India, into an inocuous dry fertilizer of high manurial value.

It is, therefore, requested that the Imperial Council of Agricultural Research may kindly be pleased to approve of an extension of the present

investigations on the lines suggested above, for a period of three years, from 1st January 1940.

As the work planned above involves a large amount of mechanical and scientific work for which assistance is required, it is requested that the Biochemist engaged on the Scheme may be provided with an Assistant.

The Pilot Plant proposed to be set up for the rapid preparation of night-soil wood ash poudrette on a factory scale may require a capital outlay for machinery, equipment and incidental charges to the extent of Rs. 1,000 for which a special grant is requested.

SCHEME FOR THE PREPARATION OF CHEAP SYNTHETIC MANURE FROM TOWN REFUSE AND OTHER WASTE MATERIAL.

Estimated Expenditure for the years 1940, 1941 and 1942.

	1940.	1941.	1942.
	Rs.	Rs.	Rs.
Salary of Biochemist in the grade of Rs. 275—25—350. (The Biochemist is at present drawing Rs. 250 in the grade Rs. 250—25—300) ..	3,300	3,600	3,900
Retiring allowance at 10 per cent.	330	360	390
Salary of Assistant to the Biochemist in the grade of Rs. 80—10—100. Initia lsalary Rs. 80 p.m. ..	960	1,080	1,200
Retiring allowance at 10 per cent.	96	108	120
Purchase of materials *e.g.* night soil and ash etc., and other incidental expenses	600	600	600
Special grant for Pilot Plant for night-soil Wood Ash Poudrette	1,000	..	..
Total ..	6,286	5,748	6,210

SCHEME FOR THE PREPARATION OF CHEAP SYNTHETIC MANURE FROM TOWN REFUSE AND OTHER WASTE MATERIAL.

Biochemist-in-charge : Dr. C. N. ACHARYA.

List of Qualifications.

I. *Academic and Scientific distinctions* :—

Degrees :—

B.A. in Science (I Class) (Madras University).

M.Sc. in Agricultural Chemistry (Madras University).

Ph.D. in Agricultural Chemistry (London University).

Membership of Learned Societies :—

Associate of the Institute of Chemistry (Great Britain).

Fellow of the Indian Academy of Sciences.

Member of the Biochemcial Society (England).

Recorder, Agricultural Section, Indian Science Congress Association.

Member, Indian Society of Soil Science.

Secretary, Society of Biological Chemists, India.

II. *Training in Agricultural Research* :—

Was on the Staff of the Chemsitry Section of the Agricultural College and Research Institute, Coimbatore, from 1927 to 1933, and carried out researches under the guidance of Rao Bahadur B. Viswa Nath, F.I.C. Was awarded the Jagirdar of Arni Gold Medal for Research by the Director of Agriculture, Madras, and the M.Sc. Degree by the University of Madras.

Underwent training at Rothamsted (England) for two years from 1933 to 1935 under Prof. E. H. Richards. Carried out researches on the an-aerobic decomposition of plant materials, which secured the Ph.D. Degree of the London University.

Was appointed by the Government of Madras as one of the members of the Power Alcohol Committee to consider and report on the manufacture of Power Alcohol in the Madras Presidency.

Has been engaged on the present Scheme of Research of the I. C. A. R. for the preparation of cheap synthetic manure from town refuse and other waste material, from December 1935.

III. *Scientific Publications* :—(Dr. C. N. Acharya).

(1) The Relation between growth and intake of nutrients in the Cholam Plant (*Sorghum vulgare*)—*Madras Agric. Jour.*, Vol. 19, (1930), No. 1.

(2) Studies on the chemical composition and physical properties of plant tissue fluids—Part I. Effects of age and environment on the tissue fluids of French Beans (*Phaseolus vulgaris*)—*Jour. Indian Inst. Sci.*, *14A* (1931), Part 1.

(3) Investigations on the development of Prussic Acid in Cholam (*Sorghum vulgare*)—*Indian Jour. Agric. Sci.*, *3* (1933), Part 5.

(4) Studies on the hydrolysis of starch by the Enzymes in Cholam Malt (*Sorghum vulgaris*)—*Indian Jour. Agric. Sci.*, *4* (1934), Part 3.

(5) Studies on the anaerobic decomposition of plant materials I. The anaerobic decomposition of Rice Straw (*Oryza sativa*)—*Biochem. Jour.*, *29* (1935), No. 3.

(6) Studies on the anaerobic decomposition of plant materials. Part II. Some factors influencing the anaerobic decomposition of Rice Straw. *Biochem. Jour.*, *29* (1935), No. 4.

(7) Studies on the anaerobic decomposition of plant materials. Part III. Comparison of the course of decomposition of Rice Straw under anaerobic, aerobic and partially aerobic conditions—*Biochem. Jour.*, *29* (1935), No. 5.

(8) Studies on the anaerobic decomposition of plant materials. Part IV. The decomposition of plant substances of varying composition. *Biochem. Jour.*, *29* (1935), No. 6.

(9) Determination of Carbon and Nitrogen by the action of Chromic acid under reduced pressure. *Biochem. Jour.*, *30* (1936), No. 2.

(10) Structure in relation to chromic oxidation of nitrogenous substances—*Biochem. Jour.*, *30* (1936), No. 6, *vide also* "Nature", Vol. 136 (1935), p. 644.

(11) Interference of soil in the Estimation of Furfural—*Current Science,* Vol. 5 (1937), p. 426.

(12) Estimation of Cellulose in the soil—*Proc. Soc. Biol. Chem. India,* Vol. 1 (1936), p. 8.

(13) Scheme of analysis for the organic matter fraction of soils and composts—*Proc. Soc. Biol. Chem. India,* Vol. 3 (1938), p. 21.

(14) Interference of soil in the estimation of cellulose—*Proc. Soc. Biol. Chem. India,* Vol. 3, p. 38.

(15) Determination of the furfuraldehyde yield of soils and of plant materials admixed with soil.—*Biochem. Jour., 31* (1937), No. 10.

(16) Comparsion of the Methods for the estimation of the furfuraldehyde yield of soils and composts—*Indian Jour. Agric. Sci., 8* (1938), Part 3.

(17) Comparison of different methods of composting waste materials—*Indian Jour. Agric. Sci., 9* (1939), Part 3.

(18) Studies on the Hot Fermentation Process for the composting of Waste Materials. Part I. Introductory—*Indian Jour. Agric. Sci., 9* (1939). Under publication.

(19) Studies on the Hot Fermentation Process for the composting of Waste Materials. Part II. Some factors influencing the efficacy of the Hot Fermentation Process—*Indian Jour. Agric. Sci., 9* (1939). Under publication.

(20) Composting of Farm and Town Wastes in India—Scientific Monograph of the Imperial Council of Agricultural Research (Under publication).

APPENDIX LXXII.

Note on Subject No. 30 (a) :—Results of the analysis of soil samples from various provinces by (a) Alkaline Permanganate Method, (b) International Soda Method and (c) Hypobromite Method.

In may 1939 the Advisory Board considered this subject [*vide* item No. 13-(2) of the agenda] and suggested that the papers might be referred to the Statistician to the Council for analysis and discussed at the next meeting. A note prepared by the Statistician is now attached for consideration (Enclosure.)

ENCLOSURE.

Note on the examination of the data of the soil analysis of different soils by different methods by different workers.

by

Statistician, I. C. A. R.

Introduction.—The data collected consist of results of mechanical analyses of soils from 24 different places for comparing three different methods (International Soda method, Alkaline Permanganate method and Sodium Hypobromite method) at seven laboratories (or centres); besides the three methods tested for comparison, five more methods were added at the Irrigation Research Laboratory, Lahore. The characters analysed are: (1) Moisture, (2) Loss on ignition, (3) Coarse Sand, (4) Fine Sand, (5) Silt, (6) Clay, (7) Loss on Solution, (8) $CaCO_3$, (9) Organic Carbon. The advantages and disadvantages of the three methods have been explained by the several workers, and they are summarised in the papers placed before the Advisory Board. The data have now been analysed statistically to find out the consistency or otherwise of the results of the individual methods at each laboratory (or centre) and between different laboratories, but the results of individual determinations are not available which, if available, would have strengthened the statistical interpretation.

Results of Statistical Analysis.—The papers placed below show the results of the analysis. The usual analysis of variance has been adopted for each type of soil separating the variances due to (1) Centres, (2) Methods and (3) Error. The only methods for which data could be analysed were the three primary methods, and the Lahore methods were not taken into account in this study. The number of centres at which each type soil was examined differed, and also the characters of the soil examined. The only characters susceptible of Statistical Analysis were Coarse Sand, Fine Sand, Silt and Clay. For each soil, besides the analysis of variance, a table is attached giving the Co-efficient of Variance ($=\frac{\text{S.D.}}{\text{Mean}}\times 100$) for each of the three methods tested at different centres. The summary of the analysis shows that of the 24 soils examined, most of them gave for Coarse Sand and Fine Sand significant differences between the labora-

tories, and consistent results for Silt and Clay; and at each laboratory the three methods gave *consistent* results for each character. The following statement confirms the above finding :—

Total No. of soils examined.	No. of soils where consistency between the laboratories is shown (*i.e.*, where there was no significant difference).				No. of soils where consistency between different methods is shown (*i.e.*, where there was no significant difference).			
	Coarse Sand.	Fine Sand.	Silt.	Clay.	Coarse Sand.	Fine Sand.	Silt.	Clay.
24	3	6	15	16	19	21	14	16

The following statement gives the number of soils with 10 per cent. Coefficient of Variability and above between different Centres at which the same type of soil was examined by each of the three methods :—

Number of Soils.

Coarse Sand.

Total No. of soils examined.	I		A		S	
	Below 10 %.	10 % and above.	Below 10 %.	10 % and above.	Below 10 %.	10 % and above.
24	0	24	0	24	0	24

Fine Sand.

I		A		S	
Below 10 %.	10 % and above.	Below 10 %.	10 % and above.	Below 10 %.	10 % and above.
6	18	8	16	7	17

Silt.

I		A		S	
Below 10 %.	10% and above.	Below 10 %.	10% and above.	Below 10%.	10% and above.
11	13	10	14	8	16

Clay.

I		A		S	
Below 10%.	10% and above.	Below 10%.	10% and above.	Below 10%.	10% and above.
19	5	17	7	18	6

Thus it is seen that high differences between the centres (of more than 10 per cent.) have arisen in the case of Coarse Sand and Fine Sand, that in the case of Silt the differences may be said to be even, and that in the case of *Clay* the variability between Centres is low enough.

Summing up, purely from statistical standpoint at each laboratory all the three methods gave consistent results in the case of each of the four characters under examination, but between laboratories in testing the same character of the same type of soil significant differences were noted in the case of Coarse Sand and Fine Sand while in the case of Silt and Clay such differences are small.

M. VAIDYANATHAN.

C. V.—Co-efficient of Variation $\frac{(S.D. \times 100)}{Mean.}$

Lab.—Places where the same soil has been analysed.

Method.—I, A, S.

Summary of Significances

[Figures in bracket represent the

Serial No.	Soil.	Coarse Sand.					Fine.	
		*Significant or not.		C. V.			Significant or not.	
		Lab.	Method.	I.	A.	S.	Lab.	Method.
1	Red Laterite Soil, Dacca Farm, Bengal	Yes (4)	No	40	34	42	Yes (4)	No
2	Ganges Silt, Rajshahi (Bengal) ..	Yes (4)	..	..	..	..	Yes (4)	No
3	Tista Silt Soil, Rangpur (Bengal) ..	Yes (4)	No	53	54	52	No (4)	No
4	Padegaon (Bombay) Soil No. 350 ..	No (4)	No	50	72	52	No (4)	No
5	Padegaon-Lab. No. 359 [Profile No. soil 4 (0″—12″) 184/1936].	Yes (4)	No	89	95	56	No (4)	No
6	Padegaon Soil, Lab. No. 485 [Profile No. 14 (0″—12″) 105/1936].	Yes (4)	Yes	68	75	53	Yes (4)	No
7	Bombay Soils—Laterite (0″—9″) Surface Soil, Belgaum.	Yes (3)	No	37	35	38	Yes (3)	No
8	Bombay (Poona)—Medium Black Soil (0″—9″)—surface soil.	No (3)	No	67	49	33	No (3)	No
9	Bombay (Nadiad)—Goradu Soil 0·9″ surface soil.	Yes (3)	No	80	86	74	Yes (3)	No
10	Burma Soil—Hmawbi Paddy Paddy Area Surface Soil.	Yes (4)	No	58	56	45	Yes (4)	No
11	Burma Soil—Hmawbi Upland Garden Area Surface Soil 107/36.	Yes (4)	No	60	43	54	Yes (4)	No
12	Burma Soil—Mandlay Paddy Area Surface Soil 108/1936.	Yes (4)	No	82	91	73	Yes (4)	No
13	Black Cotton Soil—0—9″ Field No. 67, Government Experimental Farm.	Yes (4)	Yes	83	184	41	No (4)	No
14	Central Provinces Kanbar (Black) Surface Soil 9″ Depth.	Yes (4)	No	45	48	35	Yes (4)	No
15	Red Soil 0·9″ Government Farm, Chandkuri Raipur, Central Provinces.	Yes (4)	No	27	25	25	Yes (4)	No
16	Sakrand Saline Soil (Sind) 0·6″ ..	Yes (3)	Yes	58	66	49	Yes (3)	Yes
17	Sweet Soil, 0·6″ Mirpurkhas, Sind ..	No (3)	No	40	47	35	Yes (3)	No
18	Slightly Saline Soil 0·6″ Dokri, Sind ..	Yes (3)	No	71	26	23	Yes (3)	No
19	Normal Soil, Surface Soil (1), Punjab ..	Yes (4)	No	53	45	53	Yes (4)	No
20	Saline Soil (11) Thur, Punjab	Yes (4)	No	81	71	78	Yes (4)	Yes at 5%.
21	Alkaline Soil (Bara), Lahore	Yes (4)	Yes	63	74	53	Yes (4)	No
22	Soils from H. E. H. the Nizam's Dominions, Hyderabad.	Yes (3)	No	93	44	68	No (3)	No
23	Nizam Government Farm	Yes (3)	No	49	53	53	Yes (3)	No
24	Mahboob Bagh, Parbhani	Yes (3)	No	81	124	44	Yes (3)	Yes at 5%.

* Sample of Analysis of Variance for each soil

	S. S.	Variance.
Laboratories :—		
Methods		
Error		

I.—International soda method.

A.—Alkaline permanganate.
S.—Sodium hyprobromite.

of the Various Methods.
number of centres.]

Sand.			Silt.					Clay.				
C. V.			Significant or not.		C. V.			Significant or not.		C. V.		
I.	A.	S.	Lab.	Method.	I.	A.	S.	Lab.	Method.	I.	A.	S.
51	51	48	Yes (6)	No	24	21	16	No (6)	No	5	5	6
20	18	22	Yes (5)	No	10	10	4	Yes (4)	Yes	14	17	27
1	3	5	No (5)	No	8	10	15	No (5)	No	12	14	41
20	27	87	No (5)	No	37	29	27	No (5)	No	16	5	39
26	47	19	Yes (5)	No	35	60	32	Yes (5)	No	8	9	2
7	12	5	No (5)	No	29	15	13	No (5)	No	7	6	4
22	29	13	No (4)	Yes	7	3	12	Yes (4)	Yes	4	5	6
10	7	17	No (4)	Yes	18	10	13	No (4)	No	3·3	4	5
14	14	15	No (4)	No	6	22	8	No (4)	Yes	6	1	7
34	24	43	Yes (5)	No	5	8	6	No (5)	No	9	11	5
61	51	58	Yes (5)	No	73	59	57	Yes (5)	No	45	45	37
16	22	17	No (5)	No	9	27	16	No (5)	No	4	8	15
36	24	72	No (6)	Yes	13	6	12	No (6)	No	6	11	25
46	42	41	Yes (5)	Yes	9	6	8	Yes (5)	No	2	7	3
25	24	26	Yes (5)	No	23	27	23	Yes (5)	No	23	27	23
6	4	9	No (4)	Yes	13	12	12	No (4)	No	8	17	7
7	4	9	No (4)	Yes	5	5	9	No (4)	Yes	4	7	1
20	17	26	No (3)	Yes	5	2	14	No (3)	Yes	4	5	6
9	2	6	No (5)	Yes at 5°/o	4	4	10	No (5)	Yes at 5%	2	8	8
1	2	3	Yes (5)	Yes	8	7	10	Yes (5)	Yes	5	7	5
14	8	8	No (6)	Yes	6	5	6	No (6)	Yes	3	7	7
18	6	23	No (3)	No	10	22	2	No (3)	No	2	4	3
44	45	46	Yes (3)	No	34	63	74	Yes (3)	No	9	8	6
55	32	32	No (3)	No	12	4	3	No (3)	No	1	4	3

APPENDIX LXXIII.

Note on Subject No. 30 (b) :—Note by the Agricultural Commissioner with the Government of India on the present position and future requirements of anti-erosion work in India.

The attached note (Annexure) by the Agricultural Commissioner with the Government of India on the present position and future requirements of soil conservation work in India is for the consideration of the Board. The note will first be considered by the Central Fodder and Grazing and the Soil Science Committees whose reports will be circulated to the Board in due course.

ANNEXURE.

NOTE BY THE AGRICULTURAL COMMISSIONER WITH THE GOVERNMENT OF INDIA ON THE PRESENT POSITION AND FUTURE REQUIREMENTS OF ANTI-EROSION WORK IN INDIA.

[This note is to go to the

(1) Central Fodder and Grazing Committee,

(2) Soil Science Committee,

(3) Crops and Soils Wing of the Board of Agriculture.]

The subject of this note has already been thoroughly dealt with by Dr. Maclagan Gorrie in his lecture on the " Problem of soil erosion in the British Empire with special reference to India " delivered before the Royal Society of Arts on May 3rd, 1938, and published in the Journal of that Society, July 29th, 1938, p. 902. A summary of this article appears in ' Nature ', September 24th, 1938, p. 560-561 entitled " Soil Erosion in India ". Why then trouble with still another note ? The idea is briefly—

(1) to re-state what our own problems are,

(2) to indicate how far we are on the way to solve them, and

(3) to consider what further action is required.

This note is deliberately made brief as the subject will be taken up in no less than three consultative bodies, meeting about the same time, *i.e.*, the Central Fodder and Grazing Committee, the Soil Science Committee of the Advisory Board, Imperial Council of Agricultural Research and the Crops and Soils Wing of the Board of Agriculture.

First, what are our own problems ? There are several ways of classifying these one being to divide them into

(1) problems of cultivated land,

(2) problems of grassland, and

(3) problems of forest.

They are all inter-connected and have also got a bearing on other problems such as silting up of rivers, canals and tanks, and flooding.

The problems might equally well be divided according to the different types of erosion, *e.g.*, sheet, gully, etc., or according to slope, altitude and rainfall, or according to geographical and political boundaries. Let us for the present stick to the first mentioned classification, *i.e.*, erosion problems of cultivated land, grassland and forest of these, the last named have received by far the greatest amount of attention and particularly in the foot hills of the Himalayas where erosion has been rapid, widespread and disastrous. The application of successful anti-erosion measures has been done on a more or less, experimental scale, and particularly at Hoshiarpur and what seems to be required is the extension of such measures over a very big area. Grassland erosion has received attention again particularly by the Forest Department and particularly in the Punjab, Central Provinces and Bombay. Anti-erosion measures for cultivated land have for a long time been the particular work of the so-called Bunding Officers belonging to the Agricultural Department in the Centre and South of the Bombay Province. In that Province there has been considerable experimentation with different types of bunds and waste weirs for different slopes, different types of cultivation and different purposes. A fair amount of data on cost and designs of bunds and waste weirs are available. In the Nasik district of the same Province a certain amount of work has been done in making contour bunds by means of a tractor on long gentle slopes. Recent indications are that Bombay is definitely becoming anti-erosion minded and that such measures will bulk largely in all rural development schemes.

Some of the more recent developments of soil conservation devised in America such as strip cropping have not yet been tried out in this country. There is no doubt that India has much to learn from soil conservation work in America both as regards technique and organisation. The legislation, particularly the Soil Conservation Act and the recent Standard Act for the creation of soil conservation districts deserve particular study. The working of the Civilian Conservation Camps is a striking example of how to use spare manpower. The collaboration of the Federal Government, the State Governments and private landowners in the United States of America has a definite lesson for a large country like India also composed of several Provinces and States with a Central Government.

While information on all these points can be obtained by reading, there is no doubt that by far the greatest good to India would result from the deputation to America of someone who could see on the spot the working of the soil conservation measures and bring back to India the information and the inspiration required. There has been no such visitor since Dr. Maclagan Gorrie went to America and Canada on a short tour which resulted in his book. " The Use and Misuse of Land " published by the Oxford University Press.......... At that time the Soil Conservation Service, as it now is, did not exist. Its embryonic form, the Soil Erosion Board, was then functioning. A study of the whole of the development since that time is well worth while, and I am sure that plans, estimates, photographs and personal experience would all be available for any properly recommended officer sent on special duty for this purpose.

In the midst of war it may be impossible to attempt such a deputation but it is a proposal regarding which we can express an opinion and register a decision for future action.

APPENDIX LXXIV.

Note on Subject No. 30 (c) :—Note on " surface and sub-surface investigation carried out in Lloyd Barrage area in Sind ".

The attached note (Annexure) received from the Secretary, Central Board of Irrigation on " Surface and Sub-Surface investigation carried out in Lloyd Barrage Area in Sind " is circulated for information. The plates referred to in the note will be exhibited at the meeting.

ANNEXURE.

Note on surface and sub-surface investigation carried out in Lloyd Barrage area in Sind.

I.—HISTORY OF INVESTIGATION INTO THE MOVEMENTS OF WATER TABLE IN SIND.

The Public Works Department in Sind have always devoted considerable attention to the movements of the water table in this Province. Long before the construction of the Lloyd Barrage and Canals project was contemplated, depths of water table below ground level in selected wells in certain tracts used to be observed both on the Right and Left Bank of the River Indus. The lines along which the observation wells were situated, extended east and west from the river for a distance of about five miles only.

In 1918 when investigations for the proposed Lloyd Barrage and Canals project were being carried out, definite cross section lines for observation wells were laid on the Left Bank south of Sukkur, with a view to keeping a systematic record of the movements of the water table. These cross section lines were laid along every 5th East and West line of Dr. Summer's contour survey, *i.e.*, at distance apart of slightly over 6¼ Miles ; suitable pakka wells for observation purposes were selected along these lines.

In 1919 similar cross section lines for observation wells were laid on the Right Bank south of Sukkur.

Observations on wells along these lines both on the Right and the Left Bank were taken twice a year during April and October.

As regards the tract North of Sukkur, the old system of observations was continued more or less till the end of 1923, when at a conference with the Punjab Engineers it was decided to lay out definite cross sections in this tract also, with a view to linking up the Punjab system with that of Sind. Thus, after 1924 right upto 1931-32 a fairly complete data for the movements of water table in Sind, based on well observations are available. These wells continue to be observed even up-to-date.

CIRCUMSTANCES LEADING UPTO THE PRESENT INVESTIGATIONS.

Early in the period of construction of the Lloyd Barrage and Canals Project, the question of waterlogging, was brought very prominently to notice by the experience of the Punjab Irrigation Department, who had to set up a special organization for the investigation of water logging problems and to undertake many expensive drainage schemes with a view to the reclamation of water logged or damaged lands. The canal system in the Bombay Deccan, which are

fed from storage reservoirs, have also experienced certain amount of trouble due to the damaging, or waterlogging of lands as a consequence of irrigation from the canal systems. The experience of the Punjab and Bombay indicated that similar trouble might be expected in Sind and led to the investigation of conditions in the areas commanded by the Lloyd Barrage Canals with a view to ascertaining the possibilities of waterlogging following the commencement of Barrage Irrigation. It was found, as a result of preliminary investigations, that a very large area on the Right Bank (approximately 3,500 square Miles) in which the predominant crop was rice, had a high sub-soil water table. This water table was found to vary, yearly, from 3 ft. to 12 or 13 ft. below the surface of the ground the water table being nearest the surface at the end of the irrigation season in October and lowest at the commencement of the Irrigation season in June. In the other areas commanded by the Barrage, mostly those on the Left Bank of the River, sub-soil water table was found to be situated at much lower levels and the problem of possible waterlogging was, therefore, considered to be most urgent on the Right Bank.

The Pre-Barrage system of irrigation on the Right Bank was from inundation canals, taking off the river Indus and the cultivation on these canals consisted, principally of rice. These inundation canals ceased to flow at the end of September or early in October in each year and no water was put on the land commanded by them for the period between October in the one year and June in the next year. The sub-soil had, therefore, time to recover and get rid of the additions of water made during the irrigation season by natural drainage before next irrigation commenced.

The danger of serious permanent rise in the water table in this area of rice cultivation after the commencement of Barrage irrigation was thus apparent and in order that as much knowledge as possible should be available for the study of the question, it was decided to carry out investigations first of the sub-surface conditions in the Right Bank area.

II.—Organisation to carry out Investigation.

A special organisation called the Research Division was created to carry out investigations into the sub-soil conditions in September 1930. The investigation on the Right Bank was carried out during the working season 1930-31, during the course of which, it was decided to extend the investigations to the whole of the Barrage Command.

The main investigation on both the Right and the Left Banks was completed in 1931-32.

By the end of 1932, the work in connection with the collection and analysis of data collected from the observations of pipes and wells, serious, rise of sub-soil water in the Khairpur State on account of seepage from the Rohri Canal and the two Khairpur Feeders and various other urgent problems in regard to rise of water table on the Right Bank, had increased to such an extent that the Research Division could not possibly cope up with it and hence the necessity of a special organisation to co-ordinate work on different drainage schemes was keenly felt. By the end of 1933 the Right Bank Drainage Division was opened, which was followed by the Left Bank Drainage Division in April 1934.

III.—Method and the Nature of the Field Work.

A.—*Main Investigation Work.*

Plate No. 1 (not printed) is an index plan of Sind, showing the area in which main investigation has been carried out and plate No. 2 (not printed) shows the *ground contours of the area commanded by the Barrage Canals.*

(i) *Positions of temporary and permanent Boards.*—For the convenience of measurement of irrigated areas, the whole of the Barrage Command has been rectangulated by the Survey of India. This rectangulation has been used as the frame work on which the sub-soil investigation has been based. The rectangles of the rectangulation grid, which are 2·5 Miles along east and west and 1·6 Miles north and south, have been marked by stones at their corners and at certain places along their sides and the investigation into the sub-surface conditions has been carried out by boring holes into the ground on the East and West lines, bore holes being situated at the corners and centres of sides of rectangles. Those at the corners, *i.e.*, 2·5 Miles apart have all been taken to 30 ft. depth, while those between the 30 ft. bores have been carried only into the main sand layer or to 30 ft. if no sand layer has been met with. The diagram below show the arrangement of bore holes in a rectangle and the depth to which the holes are taken.

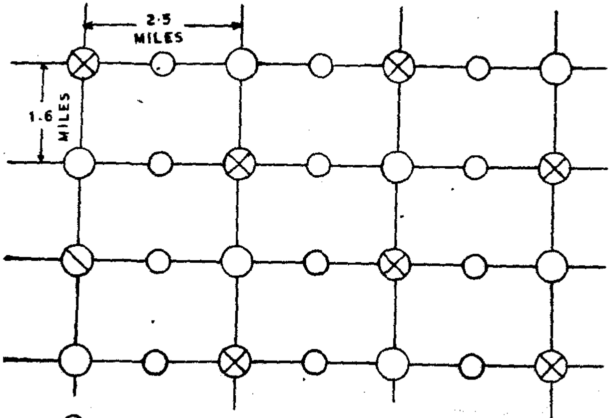

⊗ PERMANENT BORE 30 DEEE

○ TEMPORARY " 30' "

○ INTERMEDIATE BORE TAKEN DOWN TO SAND OR 30' DEPTH

In order that, it might be possible to watch the movement of the sub-soil water table, after the commencement of the Barrage irrigation, permanent

observation pipes were left in the bores made at intervals of five miles on lines running East and West, the permanent pipes in one line being staggered from those in the lines adjacent to it.

The water levels in the permanent observation pipes of which there are about 3,300 and in some 425 wells (which have been observed twice yearly since 1919) are being observed regularly every two months since 1932.

(ii) *Soil Sampling.*—Soil samples were collected from the surface, by scrapping the soil to a depth of about 1", and from the first 6 ft. of each bore holes by individual foot. Samples were also taken from each of the various strata passed through, below 6 ft. depth from the surface.

All the soil samples so collected were classified according to certain standards laid down by their appearance and their feel to the fingers into 5 types *viz.*, clay, clay silt, silt, sandy silt and sand.

(iii) *Water Samples.*—Water samples were collected from each bore hole as soon as water was met with and from each of the various strata passed through upto 30 ft. Observations of the recuperation co-efficient of the sub-soil water level were made at each of the strata after water was tapped in any bore.

All the soil and water samples thus collected were sent to the central laboratory at Kotri where detailed Mechanical and Chemical analyses were carried out.

(iv) The following general plans have been prepared from results obtained in the field :—

(*a*) Plate No. 3 (not printed) shows a typical section of a line of bore holes along an East and West line on which boring have been made. The bore holes are shown in their correct relative positions with all information obtained about them, such as the classification of strata, the depth of sub-soil water level as tapped and after 24 hours the recuperation co-efficient of water in the various strata and the conductivity reading and salinity in parts per 100,000 of the samples of sub-soil water.

(*b*) Plate No. 4 (not printed) shows the actual sand and clay belts. The sand belts are coloured green and the belts of heavy soil are left white. The areas coloured green indicate that the main sand belt is continuous under this area and that the surface of the belt may be situated at the surface or at any point upto about 12 ft. below the surface. In working out the classification for the making of this plan, the five classifications originally made for the soils have been reduced to three. Clay and clay silt being considered as heavy soil, silt as medium soil and sandy silt and sand being taken as sand for the purposes of sand belts.

It has been ascertained from the classification of strata in various tube wells, which have been put down in the Right Bank area, that coarse sand lies under the whole area *including the clay belts*, at a depth of approximately 70 ft.

(c) Plate No. 5 (not printed) shows the main blocks of kalar land, which have been marked out as a result of the surface classification of the soil made at the time of marking each bore hole. The areas marked on the plan are only to be taken as predominantly kalarish and that they may (in fact they do) contain areas of good land as well. Plate is useful as indicating the general distribution of kalar land over the area and will enable comparisons to be made with maps showing other factors such as surface contours, salinity contours, sub-soil water level contours and so on.

(d) Plate No. 6 (not printed) shows contours of salinity of the sub-soil water, the salinity being measured in parts per 100,000. The information from which these contours have been plotted has been obtained from the analyses of the sub-soil water samples collected from the various borings made. This plate brings out very clearly those areas in which the salinity of the sub-soil water is high.

(e) Plate No. 7 (not printed) shows the classification of the surface soil which is divided into heavy soil (clay), medium soil (clay silt and silt) light soil (sandy silt) and sand. This plate shows the nature of the surface soil upto one foot depth and gives a very good idea of its suitability for agricultural purposes in different tracts.

(f) Separate graph with room for ten years observations, for each permanent pipe and well is maintained. This graph shows the annual fluctuation in the water level at each observations point. A second graph will be maintained for each of the East and West lines, of the maximum and minimum level attained by the sub-soil water table of each bore on the line ; this graph will have sufficient room for ten years observations and yearly observation will be distinguished by moving the Zero of plotting slightly upwards each year and plotting in different colours. A third graph will be maintained, on which will be shown the 5 years averages of the maximum and minimum reading on each section line. From the slope of the 5 year average graph, it will be possible to ascertain whether the trend in the level of the sub-soil water table is upward or not.

B.—*Detailed Investigation Work.*

Detailed investigation has been carried out in (1) tracts in which sub-soil water level is dangerously high and (2) tracts which are predominantly 'Kalar'. Plate No. 5 shows the areas in which detailed investigations have been carried out both for high sub-soil water and kalar.

(i) *Method of detailed Investigation in tracts where the water table is high.*—The method employed for carrying out detailed investigation is the same as that employed for the main investigation except that the information collected is in greater detail. In tracts where detailed investigation is carried out, a number of pipes (these are in addition to those placed for the main investigation) are placed in selected positions. to study the movements of water table.

A number of temporary intermediate bores are also sunk upto the sand layers as per sketch given below, to know the nature of the soil.

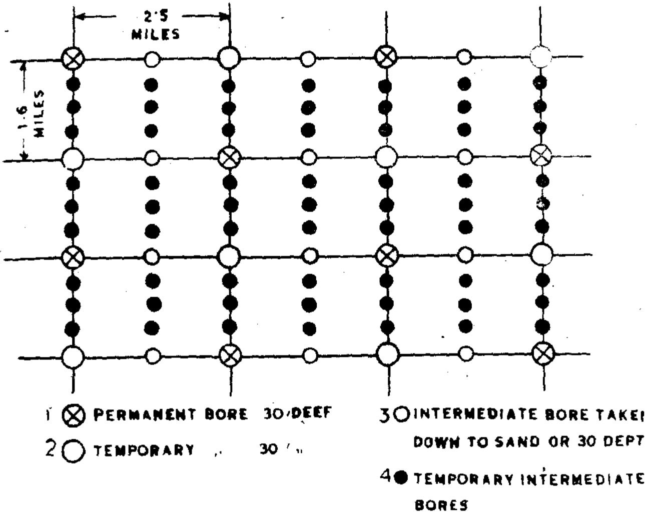

In addition to the pipes and temporary intermediate bores stated above, a large number of bores upto six feet depth are also sunk at suitable places to find out the nature of sub-soil strata.

The above arrangement of bores is not always strictly adhered to and is changed whenever the circumstances require.

Along with the sub-soil survey, surface soil classification is also carried out and the type of flora and the condition and variety of crops growing in the tract are also noted.

(ii) *Method of detailed investigation in predominantly 'Kalar Tracts'.*— Plate No. 5 shows the kalar tracts in which the detailed investigation has been carried out. This investigation was undertaken primarily with a view to finding out as much as possible about the various types of 'Kalar lands' which are met with in Sind and the surface appearance and growth of flora on the surface of the land. The idea of this investigation is to try and work out a means of classification of 'Kalar' land from the surface flora and the surface appearance of the soil. Such a system of classification has been worked out in Hungary in connection with the heavy clay Szik lands

in that country and is used almost entirely by the Hungarian Agricultural and Scientific observers for the classification of land for reclamation purposes. The detailed classification work carried out in Sind has involved the inspection of every survey number in the area and the noting down, in regard to it, of the surface conditions, the growth of flora on the area and so on. The various 'Kalar' areas have been plotted and classified in accordance with a system of classification based on its colours and other physical features and the area of kalar lands have at the same time been marked out on the village maps. From the various kalar patches, samples have been taken upto a depth of six feet and these samples are now in process of being investigated.

IV.—The Laboratory at Kotri.

Laboratory and its Equipment.—Along with the opening of the Research Division in September 1930, a Laboratory was established for the purpose of carrying out Soil, Silt and Water analyses. This Laboratory is equipped with an up-to-date apparatus (The Glass Electrode Apparatus) for the measurement of H-ion concentration, Dr. Puri's Siltometer and other apparatus for carrying out Chemical, Physical and Mechanical analyses of soils and waters.

Water samples.—About 12,000 water samples collected from various kalar patches and other sources have been received and analysed to date—mostly for essentially injurious salts. A detailed chemical analysis has also been made on selected samples. The former includes measurement of conductivity by the Dionic water tester, Total soluble salts being read off from graphs and the volumetric estimation of total carbonates (Co_3'' ions) alkalinity as sodium carbonate and total chloride. The chloride ion is wholly represented as NaCl. The detailed analyses include all this as also the pH value and the gravimetric estimation of calcium, magnesium and sulphate. The analyses show that the predominant salt in all types of waters is sodium chloride which very nearly forms 1/3—2/3rds of the total salt content and that sodium carbonate—the most toxic of all salts is practically absent.

Samples of Indus River water at Kotri are analysed periodically for pH, conductivity, temporary and permanent hardness. It is found that the conductivity varies between 160—360, pH between 7·1—8·2 and total hardness between 8—14 during the course of the year.

The salinity contours showing the parts of sodium chloride per 100,000 parts of water for the entire area investigated are shown on plate 6.

Soil samples.—Over 50,000 soil samples from different bores and kalar patches were collected as per method described in section III A (*ii*).

Since the number of the samples collected was very large, it was found necessary to discard many of them, as it was not possible either to store them or carry out a detailed mechanical and chemical analysis on them. Samples have been retained from Bore Holes where kalar exists at present on the surface, and from all clay layers recorded whether from Bore Holes showing kalar at surface or not. The total number of samples thus retained is about 26,000 out of which about 11,000 have been analysed so far. The samples have mostly been subjected to partial analysis which consists of determination of conductivity value, pH, percentage of total soluble salts, total

carbonates, alkalinity and total chloride represented wholly as sodium chloride. A good many samples from surface 1′ and 2′ depth below surface from areas selected for closer investigation, have however been analysed fully.

The results of analysis show that in kalar soils the total salt content varies from 5 per cent. — 30 per cent. in the surface soils and decreases to about 0·5 per cent. at 6′ depth which is a very encouraging figure pointing to a permeable sub-strata existing below the surface. Such areas, it appears possible to reclaim by mere flooding to drive down the salts. Chlorides of calcium and magnesium were usually met with in surface kalar soils which in appearance are always brown or black and hygroscopic, sodium chloride however always predominated, sodium carbonate was rarely observed and sodium sulphate at times was met with in appreciable quantities.

pH values.—The pH values showing whether the soil is acidic or alkaline have been determined mostly by the Antimony Electrodes for about 11,000 soil samples. In the case of kalar soils from surface, 1′ and 2′ it has been estimated by the Glass Electrode apparatus as well. The maximum and minimum pH values for soils generally met with in Sind were found to be 8·8 and 6·8 respectively and quite within the limits of reclamation. This shows that the Sind soils are alkaline as in the Punjab. Acidic soils as met with in the Deccan are absent. Plate 8 shows pH contours for samples at 3′ depth from Shahdadkot patch.

Capillary tests and Sediment Volumes.—Apart from the usual chemical analysis, about 2,500 kalar soil samples have been subjected to capillary tests both in distilled water and normal sodium chloride solution and also to sediment Volume observation in ·2 per cent. sodium carbonate solution, to get an insight into the physical characteristics of the soils and know if and how far Sind soils are sodiumized.

Lime content, Pore-space, Moisture content, Stiky-point, etc.—Several selected soils have been subjected to all the above tests. Lime content as determined by the Collin's Calcimeter or Schrotters Apparatus, varied between 6—11 per cent.—very seldo less than 6 or more than 11 per cent. Pore-space varied between 30—55 per cent. for light soils to heavy soils respectively. Percentage moisture content was about 3 per cent. for surface samples and increased at lower depths to about 20 per cent or more at the sub-soil water level.

Permeability experiments and treatment of soils with $CaCl_2$ for Road-making.—Several experiments have been made on soils of various textures and their admixture with sodium carbonate of different concentration, to reduce seepage through them by the formation of sodium-clay which is impervious. It has been found that 0·1 per cent. sodium carbonate solution worked quite satisfactorily with soils containing about 10—13 per cent. clay to reduce seepage losses through them by at least 30 per cent.

A certain amount of experimental work has also been done on soils both heavy and light in texture and their admixtures, treated with calcium chloride of various concentrations to arrive at a suitable mixture fit for Road-making.

The work on exchangeable bases, total Base exchange capacity, Degree of alkalization, etc., are all in progress.

Silts.—About 17,000 silts and siltywater samples collected from various canal beds, berms from canal water at surface and bottom have been received and mechanically analysed so far. The analysis has mostly been done by the sedimentation method in case of all fine silt samples, the coarser samples have however been analysed by Dr. Puri's siltometer, the results of which in many selected cases have been represented by drawing their Summation and Distribution curves.

V.—Observations of Sub-soil Water Levels.

The observations of sub-soil water levels may be divided into two parts *viz.*, (1) *those observed in wells in the pre-barrage period* and (2) those observed in wells and pipes in the post Barrage period.

The observations of sub-soil water levels in wells prior to 1919 in the pre-barrage period, as already stated, in section 1 above used to be taken in a few selected wells in certain tracts, situated within a distance of about five miles from the river. Most of these old data, unfortunately, is not available now. From 1923 upto the opening of the Barrage in 1932, however, complete data from well observations is available. The sub-soil water levels during the pre-Barrage period used to be observed in the months of April and October upto 1929 and thereafter in June and October of each year; these period representing the minimum and maximum levels respectively.

Since the opening of the Barrage in 1932, the old selected wells as well as the permanent pipes placed at the time, the main investigations were carried out during 1930-31 and 1931-32 have been observed regularly every two months.

Out of the six observations taken during the year the results of April and October observations only are shown on plans in the form of Hydro-Isohaths (contours of equal depths below ground level) and difference contours. The latter represents in the form of contours, rises or falls in the water table between a certain period of one year and a similar period of any succeeding year.

The following plates show the position of water table between 1932, *i.e.*, the year in which the Barrage was opened and 1938.

Plates 9 and 10 show hydroisobaths for April 1932 and April 1938 respectively.

Plate 11 shows difference contours for April 1932-38.

VI.—Movements of the Water Table during the period 1932-38.

In order to follow the movements of water table clearly, it would be desirable in the first instance, to study the nature of strata, rainfall system of irrigation and the nature of crops grown, etc.

(a) Strata.

Plate 4, details of which have already been given in section III (IV) (*b*) shows the actual sand and clay belts.

A consideration of this plate will show that the sand belts appear to have been caused by the vagaries of the river and it appears probable that the whole of the Right Bank area consisted originally, of clayey materials put down by the flood waters from the Indus which were ponded against the Khirtar Hills in a more or less still condition and that, after the formation of this large expanse of clayey material, the river meandered through it, cutting away the clay on its course and leaving sand in its place, thus accounting for the sand belts that exist at present.

(b) Rainfall.

Sind is a land of scanty and uncertain rainfall. The water laden monsoons on their long journey towards the north, shower most of their waters in the Presidency proper and Gujrat. Of whatever is left behind, the major portion goes to the Desert of Thar and Parker and the lower Sind, thus leaving very little for the central and almost nil for the upper Sind.

Plates 13 and 14 show the rainfall at the rain gauge stations in the Barrage command on the Right and Left Bank respectively.

Plate 12 is an Index Plan of Sind showing the positions of the above stations.

Average figures for 7 years from 1863 to 1870 and subsequently for each successive period of ten years have been worked out. Where figures for full years are not available, averages for the number of years for which these are available, have been worked out.

These statements show that the average figures of rainfall on the Right Bank vary between 1·5 and 6·7 inches while on the Left Bank between 2·8 and 12·9 inches.

The maximum average figure of 12·9 inches for the Left Bank is for Mirpurkhas for the ten years ending 1930 and is due to the torrential rains of 1927 and 1929 when 27 to 51 inches of rain was recorded in Mirpurkhas and its neighbouring tracts.

Plate 15 shows the annual rainfall, along with five years averages for all the district towns in Sind.

From these statements, it will be observed that the rainfall on the Right Bank is so scanty that it cannot have any effect on the sub-soil water.

As regards the Left Bank, although rainfall is comparatively higher than that on the Right Bank, yet it is not enough to have any appreciable effect on the water table, especially in view of the fact that the Left Bank area is a dry crop area and the water table is fairly low.

Rainfall in Sind, threrefore, does not deserve anv serious consideration as regards its effect on raising the water table.

(c) System of Irrigation and Nature of Crops grown.

(a) The Right Bank is irrigated by the following three Canal systems :—

(1) North Western Canal System :—This canal is perennial and has a discharge of 5152 cusecs at head.

This system irrigates the Northern portion of the area under the Barrage command. The main crop on this system is Rice, except in the area commanded by the Khirtar Branch, wherein dry crops are grown.

(2) Rice Canal System :—This is non-perennial Canal and runs from June to October only. It has a discharge of 10215 cusecs at head.

This system irrigates the central portion of the Barrage command on the Right Bank, where the crop grown is entirely Rice.

(3) Dadu Canal System :—This canal is perennial and has a discharge of 2837 cusecs at head.

For the first 40 Miles or so, this canal runs parallel to the Rice Canal and there is practically very little irrigation from it. Between the 40th and the 90th Mile of its command both rice and dry crops are grown. Below the 90th Mile there is mostly dry crop and very little of Rice.

(b) The left Bank is irrigated by two main systems (1) The Rohri Canal and (2) The Eastern Nara. Besides these two main systems for the British India, there are two Feeders, *viz.*, The Khairpur Feeder East and Khairpur Feeder West which irrigate the Khairpur State only.

(1) The Rohri Canal at its head has a discharge of 10887 cusecs; it is a perennial canal on which there is very little rice area, cotton is the predominant crop.

(2) The Eastern Nara at its head has a discharge of 13400 cusecs.

This channel acts merely as a feeder to three different systems, *viz.*, the Jamrao, the Mithrao and the Khipro, as well as two smaller canals the Thar and Hiral having a discharge of 3208, 2056, 1401, 2389 and 253 cusecs at head respectively. Thar is non-perennial and grows rice, while all the others are perennial.

Cultivation on the Jamrao Canal is entirely of cotton and other dry crops. Cultivation of rice is not permitted on this system.

On the Mithrao and the Khipro canals some rice cultivation is permitted in the upper reaches where the Zamindars have old established rights. The main cultivation, however is cotton and other dry crops.

The two Khairpur Feeders irrigate lands in the State on either side of the Rohri Canal. The discharges of Khairpur Feeder East and West are 2094 and 1940 cusecs respectively.

The main cultivation on these two feeders is rice.

RISES AND FALLS IN THE WATER TABLE DURING 1932-35.

As mentioned in one of the preceding sections, the observations on all the wells and pipes are taken once in every two months, *i.e.*, six times in a

year. The observations of April only are, however shown on plan in the form of Hydro-Isobaths and difference contours.

Since one set of observations is completed in two months the April observations represent those taken between the 15th of March to the 15th of May, those of June between the 15th of May and the 15th of July and those of October between the 15th of September and the 15th of November.

The April observations represent the minimum while those of October the maximum sub-soil water levels.

For the purposes of comparing sub-soil water levels, the April observations are considered to be the most suitable, as these are least affected by surface water from irrigation channels, Floods and Rainfall, etc.

In tracts where rice only is grown, it is the minimum sub-soil water level that really matters because, if it is in the nature of 4 or more than 4 ft. below the ground level it will enable the seedlings to take root and, once that is done, subsequent rise in the water table due to excessive watering will not affect the crop. The rises and falls on the Right Bank, which is mainly a rice area, have therefore to be judged, keeping the above fact in view.

The results of measurements of water table during the years 1932 and 1938 as recorded in April of each year are shown on the Hydro-Isobaths and difference contours plans mentioned in section V.

The Hydro-Isobaths and difference contours plans have been suitably coloured as per reference given on each plans to show off each area effectively.

VII.—General Conclusions.

From the data available for the periods 1932-38, it is observed that since the opening of the Barrage in 1932, a rise of about 1 to 5 ft. in the sub-soil water table has taken place almost over the whole of the Right Bank area commanded by the Barrage canals. This rise is measured between the minimum levels obtained in April 1932 and April 1938.

The tracts in which the maximum rise has taken place are in the command of the North Western Canal and at the tail of the Dadu Canal, which, in the Pre-Barrage period either received a very poor or no supply at all during the inundation period, but now receive a perennial supply. The tracts in which the minimum rise has taken place are the rice tracts which although get an assured supply now but the total quantity of water taken is probably not more than what these used to get in a normal inundation period previously.

On the Left Bank, the sub-soil water table generally is low except in the Khairpur State, where due to seepage from the Rohri Canal and the two State Feeders, certain areas have got waterlogged.

It has been stated above that on the Right Bank a rise of about 1 to 5 ft. has taken place between the minimum water levels. This rise has not so far damaged or waterlogged any tract, but the rise although very slow now, has not been fully checked yet. Thus, there is always a possibility that if this rise, no matter how little, continues, a time might come when some areas may get waterlogged. But it would not appear possible at the present junction to

predict whether this will occur and if so when or where. The Public Works Department in Sind are fully alive to this contingency and have therefore a special organization to keep a very careful watch over the movements of the sub-soil water table.

List of Plates.

Plate No. — Description.

1. Index Plan of Sind.
2. Ground Contours.
3. A Typical section of Bore Holes.
4. Sand and Clay belts.
5. Plan showing areas where detailed investigation is carried out for high sub-soil water table or kalar.
6. Salinity contours.
7. Surface classification of the soil.
8. pH *contours* Shahdad*kot* patch.
9. Hydro-Isobaths for April 1932.
10. Hydro-Isobaths for April 1938.
11. Difference contours April 1932-38.
12. Index plan showing Rain Gauge stations in the Barrage Command.
13. Statement of Rain Fall on the Right Bank area.
14. Statement of Rain Fall on the Left Bank area.
15. Yearly rain fall chart for District towns.

APPENDIX LXXV.

Note on Subject No. 31 (a) :—Application from the Government of Bombay for a grant of Rs. 69,020 spread over five years for a scheme for All-India Crop Forecast Improvement, by Mr. G. R. Ambekar.

An application from the government of Bombay for a grant towards a scheme for the improvement of all-India crop forecasts is enclosed. (Annexure). As modified by the Bombay Government, the scheme involves an expenditure of Rs. 61,300 (round) spread over five years of which Rs. 600 is for non-recurring items such as furniture and typewriter.

2. The Government of Bombay have also recommended that, in view of the all-India importance of the scheme, it should be financed jointly by the Indian Central Cotton Committee and the Imperial Council of Agricultural Research and do not propose to undertake any financial responsibility.

The views of the Indian Central Cotton Committee have been invited *on this proposal and will be submitted to the Board on receipt.*

3. The proposals are for the consideration of the Advisory Board.

ANNEXURE.

COPY OF A LETTER NO. 1156-A.|28, DATED THE 8TH MAY 1939, FROM THE UNDER SECRETARY TO THE GOVERNMENT OF BOMBAY, REVENUE DEPARTMENT, BOMBAY, TO THE SECRETARY, IMPERIAL COUNCIL OF AGRICULTURAL RESEARCH.

I am directed to forward for the consideration of the Imperial Council of Agricultural Research a scheme for All-India Crop Forecast improvement by Mr. G. R. Ambekar, Provincial Officer-in-charge, Cotton Forecast Improvement Scheme, Bombay Province. The scheme has not for lack of time been considered by the Bombay Provincial Agricultural Research Committee. The cost of the scheme is estimated at Rs. 69,020 spread over five years. The Government of Bombay, however, suggests the following modifications in the scheme.

2. The scheme contemplates the grant of a compensatory allowance of Rs. 100 per mensem to the Officer-in-charge of the scheme. The Provincial Government does not consider that any case has been made out for the grant of this allowance. It also considers the provision of Rs. 700 per annum made for office expenses and miscellaneous, service postage stamps, etc., excessive. As books and publications will have to be purchased during the first year of the scheme, this Government recommends that a provision of Rs. 500 may be allowed during the first year and that of Rs. 300 per annum during the remaining four years.

3. Subject to the modifications suggested in the foregoing paragraph which will reduce the total cost of the scheme from Rs. 69,020 to Rs. 61,320 or Rs. 61,300 in round figures, the Government of Bombay recommends the scheme for the favourable consideration of the Research Council. It is presumed that in view of its all-India importance, the scheme will be financed by the Imperial Council of Agricultural Research jointly with the

Indian Central Cotton Committee. It will not be possible for the Government of Bombay to undertake any financial liability on account of the cost of the scheme.

4. 150 printed copies of the scheme are forwarded herewith.

COPY OF LETTER No. 1156-A.|38, DATED THE 13TH SEPTEMBER 1939, FROM THE JOINT SECRETARY TO THE GOVERNMENT OF BOMBAY, REVENUE DEPARTMENT, BOMBAY, TO THE SECRETARY, IMPERIAL COUNCIL OF AGRICULTURAL RESEARCH, NEW DELHI.

With reference to your letter, No. 95|39-A., dated 23rd May 1939, I am directed to state that the scheme for the improvement of All-India Crop Forecast was placed before the Bombay Provincial Agricultural Research Committee at its meeting held on 7th August 1939 and was approved by it, subject to the following modifications :—

(a) that the provision of compensatory allowance at Rs. 100 per mensem for the officer in charge of the scheme (*vide*, item III of appendix A) should be omitted, and

(b) that the net pay of Rs. 500 per mensem proposed for the officer in charge of the scheme (*vide* item I of appendix A) should be considered as a maximum and, if a suitable qualified officer can be obtained on less pay, this rate should not necessarily be adhered to.

2. I am to communicate the approval of the Provincial Agricultural Research Committee to the scheme subject to the modifications mentioned above and to request that the scheme may be considered at the next meeting of the Advisory Board to be held in November-December 1939.

IMPERIAL COUNCIL OF AGRICULTURAL RESEARCH, 19TH MEETING—MAY 1939.

SUBJECT :—*An appreciation of the present position regarding agricultural statistics (in the sense of collection and publication of data) with special reference to crop forecasting in India including suggestions for the future.*

An All-India Crop Forecast Improvement Scheme by Mr. G. R. Ambekar, Provincial Officer, in charge Cotton Forecast Improvement Scheme. Bombay Province.

The importance of correct crop forecasting is too well known to require any mention. Realising this, the Government of India and the Provincial Governments have been issuing crop forecasts for over half a century but the position continues unsatisfactory and the estimates are wide of the mark. The special investigation being carried on in connection with the improvement of the Bombay Cotton forecasts with the financial aid of the Indian Central Cotton Committee since 1934 has shown that *all* the three factors on which the crop forecasts are based, *viz.*—(1) the area, (2) the anna valuation and (3) the standard yield figures are inaccurate. In the case of area there are instances on record where the area reported from a certain group of states, for example, for the first two forecasts issued in October and December

(*i.e.*, fully two to four months *after* the completion of the cotton sowings) has been only between 6 to 8 lakhs of acres against nearly two millions acres reported for the final cotton forecast, *for the same season*, issued subsequently in April. Similar irregularities are also noticed in the case of British Districts. Confusion between the units of measurement as between *bighas* and acres has also been found to be responsible for a wrong estimate to the extent of 100,000 bales of cotton in one group of Indian States alone.

As regards the standard yield figures, these are very much antedated, there being cases where no revision could be made for want of data for the last 20, 30 or even 50 years. Similarly, these figures are not available separately for irrigated and unirrigated crops in all cases. Further, in the absence of separate figures for the Indian States, the practice is to apply the figure of the nearest British district to work out the outturn in States but the Bombay cotton forecast investigation has clearly shown this practice as definitely wrong.

As regards anna valuation, *i.e.*, the estimation of the condition factor, it is mostly an eye-estimate and hence only approximate. Besides, it is mainly done for purposes of land revenue which is based upon it. Experience has shown that for other purposes like crop forecasting, this valuation work is neglected.

The severe official and non-official criticism of the Bombay castor-seed and groundnut forecasts a few years back, the very wide difference in the estimate of tobacco outturn framed by the local Officers and that framed by the Agricultural Department on the basis of the old standard yield figures, all go to confirm the unsatisfactory character not only of cotton crop forecasting, but of crop forecasting as a whole, at least in the Bombay Province.

Now, as the system of Government crop forecasting is identical for all the crops and in all the Provinces of India, it follows that the position must be unsatisfactory everywhere in India and for all the crops. This view is further confirmed by the remarks made by the various authorities who considered the question from an all-India point of view, *e.g.*, the Board of Agriculture in India, the Economic Enquiry Committee, the Royal Commission on Agriculture, etc., etc. But while the position is so unsatisfactory, the experience of the Bombay Cotton Forecast Improvement Scheme which is now in existence for nearly five years has shown that much can be achieved by a closer study of the situation. For instance, the Bombay investigation has brought to light many defects and errors in the three main factors of area, anna valuation and standard yield figures which, but for this special investigation, would never have been noticed. The confusion between bighas and acres which had resulted in a persistent over-estimate by 100,000 bales in one group of Indian States, the confusion noticed in the definition of a normal crop as understood by the various Officers and even Departments, the confusion in the number of annas taken to represent a normal crop in different areas, the unsuitability of the standard yield figures of adjoining British districts for Indian States, the difference noticed in the standard yield figures adopted by the Reporting Officers in different places or by different officers even in the same place, (*e.g.*, some adopting the figures supplied

by the Agricultural Department, others taking the figures given by the Revenue Department, some others using the figures which *they* consider as right, etc., etc.) are but a few instances of irregularities brought to light by the Bombay investigation and, further, these are instances which the statistical staff attached to offices of the Provincial Directors of Agriculture had never or could never have found out. As a result of this special investigation, there is reason to suppose that the area figures are now much better than formerly. As for anna valuation, it is the basis for the collection (or for suspensions and remissions) of land revenue. It is, thus, an administrative question and so cannot be tampered with but even in this case it has been found that by making a certain allowance on the basis of previous experience, it is possible to improve appreciably the forecast estimate. With regard to the standard yield figures, the work in connection with the Bombay scheme has also shown that although systematic crop cutting experiments are the best means to revise the figures, much can be done to revise them in the light of other data, *e.g.*, collecting yield data from experienced officers and cultivators, by tabulating and interpreting data available with the Agricultural and Revenue Departments in their Annual Reports, Experimental Station Records, Settlement Reports, etc., by dividing the actual crop by the area over a series of years, etc., etc. The results obtained with the figures revised tentatively, with such data have confirmed this view in the case of Bombay. Further, the Bombay investigation has shown that by making allowance for the various irregularities, by the collection of relevant statistics of the movement of crop, by discussion with experienced officers, cultivators and trades people and by seeing the crop in person at numerous centres, it is possible to make independently a more accurate estimate of yield than the Government forecast of such yield. The attempt made last two seasons (1936-37 and 1937-38) in a number of cases in the Bombay Scheme has given very encouraging results in this direction, in all cases. The investigation has further brought home the importance of collecting and interpreting supplementary data, *e.g.*, movements of the crop, Trade estimates (ginning returns in the case of cotton), etc., etc.

It will, thus, be seen that by expanding the present Bombay Cotton Forecast Improvement Scheme so as to include the more important crops on which forecasts are issued and the various provinces and States of India, it is possible to improve the position of crop forecasting very appreciably without incurring any porhibitive expenditure on increasing the village staff, *i.e.*, the reporting agency. Further the necessity of improving the forecasts of *all* crops (for instance, the anxiety shown by the Imperial Council of Agricultural Research for the improvement of the statistics of wheat production and for the issue of forecasts on certain cereals and pulses) and the importance of correct crop forecasting to other very important all-India investigation like the Marketing of Agricultural produce, etc., show the necessity of an all-India Crop Forecast Scheme.

Besides, an all-India Forecast Scheme is not a new idea. Even in 1932 the Indian Central Cotton Committee came to the conclusion that it would be profitable to engage a man to study and report on the system of (cotton) crop forecasting in India and abroad. This view has been further

endorsed by high authorities. An all-India Scheme will be carried on with an all-India outlook which is essential and there will be uniformity in the method followed. On the other hand, having a Scheme for one crop or for one Province now and for another crop or Province afterwards will be like patch work. Much time will have to be spent on spade work as each Provincial Officer will have to spend a good deal of time in such work. The Bombay Scheme has shown that even for a provincial scheme it is essential to go beyond the geographical limits of the Province to ascertain how far the problem is affected by conditions in the surrounding areas [*e.g.*, the imports of loose cotton in Bombay from Hyderabad (Deccan), Mysore, Madras, the Central Provinces, Central India, etc., inflate the press figures and make the Bombay cotton forecast *appear* to be an underestimate]. As the all-India forecast is a consolidation of the Provincial forecasts, it is also evident that to make the former accurate the latter must first be improved. An investigation in the various Provinces of India may bring to light certain good points in forecasting in some Provinces which (with local modifications) can be utilised to advantage in the other Provinces. Data collected in one Province may also serve as a check on similar data collected in adjoining provinces. When once the Central and the Provincial Governments have undertaken the issue of crop forecasts as their duty, it is esesntial that these forecasts should be accurate since the public naturally look upon any information issued by Government as authentic. In any case, there is no reason for the Government forecasts being less accurate than the Trade estimates.

Considering all these points, an all-India Crop Forecast Scheme was submitted for consideration of the Board of Agriculture in India at its meeting held at Lahore in December 1937. The cost proposed was about two lakhs of rupees to be jointly financed by the Imperial Council of Agricultnral Research and the Indian Central Cotton Committee and the per'od suggested was ten years. The fact that the Scheme did not pass beyond the stage of " recommendation " for consideration of the point by the authorities concerned, shows that perhaps the cost may have been thought too high and the period too long. In order that these should not prove a hindrance to the actual launching of the scheme, a revised (*i.e.*, considerably reduced) budget with a period of five years only is herewith submitted in statement A. Although the work done in five years cannot be as detailed as done in ten, it is hoped that with the experience gained in the Bombay Cotton Forecast Scheme, it may be possible to have a fairly good idea of the situation for the whole of India even within the period of five years. The budget now submitted also amounts to only Rs. 70,000 which, when shared between the Imperial Council of Agricultural Research and the Indian Central Cotton Committee, will be Rs. 35,000 per head, further spread over a period of five years which means only Rs. 7,000 per head per annum which is not much more than what the Indian Central Cotton Committee is now contributing towards the Bombay Cotton Forecast Improvement Scheme. In view of this, as also the all-India importanse of the point, it is now for the Imperial Council of Agricultural Research to cons'der, as early as possible, jointly with the Indian Central Cotton Committee the financing of the scheme favourably.

STATEMENT A.

Budget showing the cost of an All-India Crop Forecast Improvement Scheme.

Name of Head.	Estimate of cost.					
	First year.	Second year.	Third year.	Fourth year.	Fifth year.	Total.
	Rs.	Rs.	Rs.	Rs.	Rs.	Rs.
I.—Pay of Officers—						
One Officer in charge of the Scheme at a net pay of Rs. 500 per mensem	6,000	6,000	6,000	6,000	6,000	30,000
II.—Pay of Establishment—						
(1) One senior clerk in the grade of Rs. 60—5/2—75 ..	720	720	780	780	840	3,840
(2) One clerk in the grade of Rs. 25—5/2—55 starting on Rs. 30 per mensem ..	360	360	420	420	480	2,040
(3) Three peons: one on Rs. 19, one on Rs. 18 and one on Rs. 17 per mensem ..	648	648	648	648	648	3,240
Total ..	1,728	1,728	1,848	1,848	1,968	9,120
III.—Allowances and Honoraria—						
(1) Compensatory allowance to the Officer at Rs. 100 per mensem	1,200	1,200	1,200	1,200	1,200	6,000
(2) Travelling allowance for the Officer	3,000	3,000	3,000	3,000	3,000	15,000
(3) Travelling allowance for the Establishment ..	600	600	600	600	600	3,000
Total ..	4,800	4,800	4,800	4,800	4,800	24,000
IV.—Contingencies—						
(a) Non-recurring for furniture, typewriter, etc.	600	..	..	..	..	600
(b) Recurring for office expenses and Miscellaneous, service postage stamps, stationery, forms, books and publications, etc.	700	700	700	700	700	3,500
(c) Office rent at Rs. 30 per mensem	360	360	360	360	360	1,800
Total ..	1,660	1,060	1,060	1,060	1,060	5,900
GRAND TOTAL ..	14,188	13,588	13,708	13,708	13,828 say Rs.	69,020 or 70,000

Note.—The pay proposed for the Officer is net, *i.e.*, without any increments and without any emergency and other cuts and is the lowest ever proposed for an Officer in Charge of an all-India Scheme. The compensatory allowance to the Officer is as compensation for house rent at Delhi, Simla or Bombay and for visits and stays at places like Calcutta, Madras, etc. as also for the inconveniences and disadvantages involved in constant touring. The travelling allowance to the Officer is for 2nd class railway fare in place of 1st class previously proposed so that while the expenses will be one-half the extent of touring will be the same as before.

APPENDIX LXXVI.

Note on Subject No. 31 (c) :—Proposals for Co-ordinated Research Work on Jowar.

A copy of a note by the Agricultural Commissioner with the Government of India, containing certain proposals for co-ordinated research on *Jowar*, together with copies of notes received from certain Provinces and States on these proposals, is enclosed for the consideration of the Advisory Board (Annexure).

The notes will first be discussed by the *ad hoc Jowar* Committee whose report will be submitted to the Advisory Board in due course.

ANNEXURE.

NOTE BY THE AGRICULTURAL COMMISSIONER WITH THE GOVERNMENT OF INDIA.

Proposals for co-ordinated research on jowar.

In his report Sir John Russell has drawn attention to the need for more work on the millets. It is recognised that a fair amount of work has already been done in certain provinces and States on this crop. Madras and the Punjab have Specialists who study this crop. There has also been jowar selection in various places, *e.g.* in the Gujerat and Southern Maratha Division of the Bombay Presidency. The Council in financing a research on "Striga" which is being carried out at Poona. Jowar also comes in to the scheme of work of the dry farming research stations.

The crop, however, is of such importance that it would be worth while to consider in relation to it exactly where we stand both as regards science and practice and whether we should attempt to find out what further work could be usefully done and how such work should be allotted to various agencies in an all-India programme. The following are some aspects of the question :—

(1) *Varieties*—

Grain and fodder,
Kharif and rabi,
Early and late,
Drought resistant varieties,
Striga resistant varieties.

(associated with this is the question of jowar genetics in so far as characters of agricultural importance are concerned).

(2) The place of jowar in a planned agriculture both as to its economics and its value in rotations.

(3) The yields of jowar and ways of increasing them.

(4) The pests and diseases of jowar—

(a) the fungus diseases of jowar—
Smut, Rust, Wilt, etc.,

(b) the insect pests of jowar—
Borer, etc.,

(c) the physiological diseases of jowar—
"Chikta", etc.

(5) Jowar *in human and animal nutrition.*

(6) Other means of utilisation of jowar, *e.g.* malting, etc.

It is not pretended that the above list is exhaustive but these headings will at least help to cencentrate discussion. The result of such discussion should be to indicate clear-cut problems and the means of tackling them on an all-India basis.

It is proposed that such discussion be carried out by a small committee with the following personnel :—

1. The Agricultural Commissioner with the Government of India. (Chairman).
2. The Director of Agriculture or the Deputy Director of Agriculture, Madras.
3. The Director of Agriculture, Bombay.
4. *The Director of Agriculture or the Deputy Director of Agri*culture, Hyderabad.
5. The Millet Specialist, Madras.
6. *The Cerealist, Punjab.*
7. The Economic Botanist, Bombay.
8. The Economic Botanist, Hyderabad.
9. The Economic Botanist, Central Provinces and Berar.
10. A Deputy Director of Agriculture from the United Provinces.
11. The Millets and Oilseeds Botanist, United Provinces.
12. The Director of Agriculture, Sind.
13. The Director of Agriculture, Mysore.
14. The Commissioner of Agricultnre, Baroda.

and that it should meet in Delhi at the time of the next Advisory Board in November-December, 1939, and should report to the Advisory Board.

Brief notes on any or all of the points mentioned in this note or on other relevant points may be sent to the Secretary, Imperial Council of Agricultural Research to reach him not later than the 15th of October 1939.

(Sd.) W. BURNS.

The 19th August 1939.

NOTES FROM PROVINCES ON SORGHUM.

Madras.

Sorghum in the Madras Presidency.—There are more than 4,600,000 acres under sorghum in the Madras Presideucy. Of these about 4,200,000 acres are rainfed and 400,000 irrigated. More than half the rainfed area is in the Deccan, and contaguous to the sorghum areas in Bombay and Hyderabad. The Coimbatore district has a third of the area under irrigated sorghum. Another third of the area is distributed in the four southern districts of the Province.

Most of the sorghum grown is for both grain and fooder. In the southern districts and portions of the eastern coastal districts, where the

rainfall is better and other cash crops are raised, sorghum figures as a fodder crop.

Typical Grain and Straw Yields.

		Grain. lb.	Straw. lb.
Rainfed.			
Bellary (Téllа jonna)	..	300	1,300
Kurnool (Patcha jonna)	..	530	1,300
Guntur (Patcha jonna)	..	500	1,500
Coimbatore (Perlamanjal cholam)	..	600	3,000
Irrigated.			
Coimbatore (Chitral cholam)	..	1,700	6,000
Southern districts (Vellai cholam)	..	1,400	4,000

Sorghum as Fodder.—The experience gained at the various Agricultural Research Stations is summarised below.

At the Berhampur Research Station, (rainfall 53″) in the extreme north of the Presidency, an attempt was made to grow sorghum for fodder after the harvest of paddy in December. The clayey loama of this place tended to cake up into hard pans and necessitated one or two irrigations to help the crop in February and March. A cut of 10,000 lb. of green fodder was obtained at Anakapalle (40″) in the Vizagapatam district, a rainfed fodder crop sown in June gave 9,000 lb. green fodder per acre. Under irrigation, April sown crops ranged in yields from 10,000—25,000 lb. of green fodder per acre. In the Guntur area (34″) the June sown crop is for fodder and the October crop for grain. As a fodder crop the average yield of dry fodder is 3,500 lb. By sowing sorghum mixed with the pulse *phaseolus trilobus*, the feeding value of the fodder is improved. In the dry farming tracts of the Deccan, sorghum is *the* cereal for grain and straw. In the Nandyal tract, (29″) the yield of dry fodder is 3,000 lb. per acre and in the Bellary tract, (20″) the yield is 2,000 lb. per acre. In Bellary, when irrigation is feasible, the outturn goes up to 18,500 lb. of green fodder. This potentiality of sorghum is of great importance in the Tunghbhadra irrigation scheme; what proved a valuable grain crop for the dry tract could adapt itself and serve as an equally valuable fodder crop. In the Ongole Cattle Breeding tract of the Nellore district (33″) the yield of dry fodder from the rainfed crop is 3,400 lb. per acre. Further southern the alluvial coastal district of South Arcot (51″) sorghum raised under well irrigation has given yields of green fodder from 14,000 to 20,000 lb. per acre. If the rainfall were favourable a ratoon crop of over 8,000 lb. could be cut. In the Tanjore delta (43″) it has been shown that a fodder crop yielding over 14,000 lb. per acre can be raised close on the receipt of water in the irrigation channels in June. The crop is cut in September. In the central district of Coimbatore (27″) the chief variety is *periamanjal cholam*. Under rainfed conditions, the average yield of straw is 3,150 lb. per acre. The largest irrigated sorghum area in the Presidency is in this district, and green fodder averaging 24,000 lb. per acre could be raised under well irrigation. It was found that the crop under irrigation could be spread out by sowing from February

to July. Subsequent sowings resulted in a pull-down in yield. In *rainfed* crops, the pulse *Dolichos lablab* often figures as a mixture improving the fodder value. In a neighbouring district of Salem, a Hosur, on the Mysore plateau, the straw yield from rainfed crop averages 3,000 lb. per acre. Under *irrigation*, over 19,000 lb. of green fodder has often been obtained. In the West Coast districts with their heavy rainfall and laterite soils, the yields have been very variable, ranging from 4,000 to 10,000 lb. per acre. In the Southern districts of Madura, Ramnad, and Tinnevelly, where the chief dry land cereal is cumbu (Bajri), sorghum is grown principally for fodder, under rainfed conditions. The chief variety suited to this tract is Irungu (*Sorghum dochna*). The seed rate is very heavy, often going up to 120 lb. seed to the acre. The average yield is 3,500 lb., dry fodder per acre. Under irrigation in red soils, the yield runs upto 19,000 lb. of green fodder. On the Hill Stations, sorghum could be grown for fodder, and the Wellington Dairy Farm records yields of green fodder ranging from 10,000 to 15,000 lb. per acre.

Some of the genetic attributes of good fodder are given below :—

The stalks of sorghum are either pithy or juicy. When pithy the midrib of the leaf is white in colour ; when juicy the colour of the midrib is dull green. These two characters are Mendelian, pithy stalk being a monogenic dominant. Apart from being pithy or juicy the stalks can be sweet or inspid, the former being a monogenic recessive. Most of the sorghums have sweet pithy stalks. Juicy stalked plants are not usually as tall as the pithy stalked ones as plant weight conduces to lodging.

Apart from these two attributes of fodder, namely sweetness and juiciness, the nature of the pigment, mostly evident on the leaf sheath is purple pigmented, the pigment can be either reddish purple or blackish purple. The former is a monogenic dominant to the latter. In the variety, Periamanjal cholam, both types of leaf-sheath pigmentation occur. In feeding tests it was noticed that types with reddish purple leaf-sheath were consumed by cattle with greater avidity than types with a blackish purple leaf-sheath.

Height and Duration in Sorghum.—In the Coimbatore collections there is a wide range in these two characters from which to choose. Plants range in height from 2 ft. 4 in. to 13 ft. 4 in. In duration, the range is from 85 days to 170 days. There is a broad relationship between height and duration, though late plants with a medium height are fairly common. In the nature of internodal length (the components for height) there are three groups : (1) a uniform increase in internodal length, (2) an increase and a slight decrease, and (3) an increase slight decrease and again an increase. These dispositions broadly go with short-early and tall-late varieties. The length of internodes is independent of the above three dispositions in the plant.

The Relation of some Plant Characters to Yield in Sorghum.—A summary of the correlation studies on different varieties of a sorghum is given below. The following attributes have been reported to be positively correlated with yield of grain by one or more workers ;

Height of plant, number of leaves, are of leaves the thickness of stem, diameter of peduncle, length of rachis, length

of seed branches, circumference of earhead (diameter of earhead), weight of stalks and weight of earhead.

The length of peduncle (emergence) is either not correlated or negatively correlated to yield. The above inferences are from one to three seasons' observations.

In a recent publication, J. C. Ireland (1938) who pursued the relationship between yield and 13 other characters of the plant for 8 years has summarised his conclusions as follows :—" Whether yields can be accurately predicted from the several score values indicated in these studies is doubtful, especially in seasons of sub-normal rainfall." The irregular results obtained in 4 of the 8 years show that moisture and temperature have much to do with the correlation values.

" A basis for inherintance studies may be found in three groups of values shown in this paper : (1) length of plant and plant parts (head and seed branches) ; (2) photosynthetic agencies, such as leaf area, chlorophyll, and sugar content ; and (3) number of leaves and nodes."

This indicates that any studies to determine the attributes of yield have to be pursued for a number of years on many varieties and at different centres.

Rotation and Mixed Cropping.—The application of artificial manures for sorghum has in most cases been shown to be not paying. Organic manures have toned up yield, but there is death of these in a sorghum tract. Whatever the manure, the response is best only with an assured rainfall. This is an uncertainty, and manuring has always an element of gamble about it. The next best method of treatment is to modulate the rotation. Sorghum and cotton usually alternate. Experiments on the Nandyal Agricultural Station (rainfall 29") prove that a three year rotation in which a pulse comes in before sorghum is both desirable and profitable. There is the other alternative of crop mixtures practised in certain sorghum areas in which pulses are mixed with sorghum. Experiments in other countries indicate that one of the effects of this mixture is a slight increase in the protein content of the cereal. Systematic experiments either in rotation or in mixed cropping are lacking. It is desirable to explore this field thoroughly as it offers a practical way of increasing the yield of sorghum and improving its quality.

Seed Storage.—Any scheme for seed distribution of sorghum in a normal year and of seed storage as a famine reserve is beset with difficulties. This is the most serious problem connected with this cereal. Sorghum is primarily consumed by the poor. It grows in areas of scanty rainfall. It does not figure much in commerce. The economic backing of the average sorghum grower is not strong. Sorghum is a naked grain and very liable to insect attack and weather damage during storage. I fear that seed storage for this cereal can only be on a cottage basis. Seed farms will be found very difficult to run at the storage stage. Moreover the many varieties and suitability to many tracts make it necessary to handle innumerable types in storage. It has been found at Nandyal (South India) and from a narration of experiences of an Officer from Rhodesia (Africa) that types that have proved good in one

place have proved unsuitable to a zone hardly 10 miles away. Innumerable seed selection, storage and distribution centres are thus indicated as a necessity and only a very costly state agency can cope with this. The cost of a suitable organisation may prove out of all proportion to the value of the grain for which it is intended. The whole question is very complex and requires a thorough investigation.

Sorghum for Popping.—Sorghum pops are a cheap delicacy. The ordinary grain sorghums do not pop well. Trials with various varieties have shown that the variety *S. Roxburghii* var. *hians* pops best. This variety is usually loose headed, with gaping glumes. The grains are relatively small and have a thick seed coat with a hard flinty corneous endosperm. The starch is very closely packed, and in popping there is a large expansion ratio, varying from 5 to 13 times. The pops have a fine flavour. *S. Roxburghii* has the disability of having poor straw and the suitability of its grain to popping will in some measure balance the disadvantage. It is desirable that this popping variety should be better made known.

Striga Resistance.—*Striga lutea* is a flowering parasite on sorghum. Its attack is in some years very chronic. The incidence of attack is very variable. Of the many varieties introduced into Coimbatore it was noticed that an African variety, Bonganhilo (*s. Caudatum*) from Tanganyika was resistant, while most of its neighbours had the attack. This resistance has been maintained in three years. The local variety which is susceptible to the attack of Striga has been crossed with Bongahilo. The F_1 was resistant. F_1 plants have been back-crossed with the local variety and selections will be made from the progeny. Bonganhilo has the following disadvantages when compared with the local variety ; shorter plant, smaller earhead, fewer grains and brown grains. Its duration is about the same. In the pursuit of strain resistant to striga, the extent to which the above disabilities are eliminated and the yield of the local variety maintained unimpaired is the measure of the success.

G. N. RANGASWAMI AYYANGAR,
Millets Specialist and Geneticist.

Root studies.—Root studies are very important in all crops, and especially in sorghum. Realising the importance of this line of work, provision was made for training an officer in this line of work under Dr. Weaver of Nebraska, an authority on Root studies, and this trained officer is at present conducting researches at Hagari. The following notes have been prepared by the Superintendent of the Dry Farming Research Station, Hagari :—

" Root systems of sorghum types were examined at different stages of growth. The growth rate depends upon the stage of development of the plant and growth can be plotted as a series of Sach's grand-period-of-growth curves. At every stage the plant assures itself of an elaborate subterranean equipment before enlarging its aerial parts showing a balancing in growth. In passing through the air-space in the cracks of black clayey soils the root develops special mechanical protective tissue and is white or purple in colour instead of being light brown. In older, longer roots reaching the deeper layers, the major portion of the older root does not serve as an absorbing organ but merely as a means of transla-

cation of water and nutrients abstracted by the white, tender, terminal (which is about a fourth or fifth of the total length) region and also serves as an anchorage for the top-heavy, adult plant. Drought affects the lateral spread of roots more than their vertical penetration. Varietal differences in roots exist. Loose-panicled varieties have a deeper vertical penetration and a less lateral spread of roots than compact-head ones. Short duration varieties have smaller root systems and thrive better even in droughty seasons because they produce an elaborate root system before the formation of the hard layer (referred to below) in the top soil.

Low soil moistures, within limits, promote the development of roots and root-hairs in sorghum. Bunding, fallowing and manuring (with organic manures) favour root development. The effect of the first two treatments on roots (and tops) in droughty years is more spectacular.

The crop fails in this tract of black clayey soil by the formation of a very hard layer 6″—9″ in thickness, below the top 2″ of friable, loose soil, which cuts of available moisture in the deeper layer. This hard layer prevents the latter formed adventitious roots, which are so essential to the growing sorghum from penetrating into the deeper moist layers of the soil interfering with the translocation of water and naturients to the shoot, which results in reduced growth or complete wilting of the plant. The inception of the hard layer depends upon the amount and distribution of rainfall in any season. In dry years it forms very early in the life-history of the crop due to the depletion of the moisture in the top soil by evaporation and transpiration and, in such seasons, the crop completely fails. In favourable years it forms towards the later stages of the plant and hastens the maturity of the crop by reducing the water supply. This hastening of maturity if further helped by the tearing up of lateral roots during the development of cracks. Evolution of short duration varieties which form an elaborate root system early so that they can steal a march over the hard layer is suggested.

When sown thick, sorghum is a good soil binder and protects the soil against Erosion.

2. *Drought Resistant Varieties of Sorghum.*—(Notes prepared by the Superintendent, Dry Farming Research Station, Hagari, Bellary Dt. Sorghum is the important food crop of this tract occupying nearly a fourth of the cultivable area. The vicissitudes of climate take such a heavy toll of this crop that the evolution of varieties which can successfully grow under these trying conditions has become an urgent necessity.

The chief defect of the local types is their longer duration on account of which they fail to produce any grain in years of poor rainfall or of bad distribution. The plants dry up as they cannot obtain sufficient water and nutrients from the soil at the time of their maximum need as at flowering time, which occurs in January. By this time the moisture in the top layer of the clay soil is depleted and the hard layer ushered in, cutting off the moisture supply from the deeper zones of the soil. Consequently the crop suffers. Some of the Bombay sorghums raised at Hagari were found to grow quickly and flower earlier. As the roots of these are able to reach the deeper moist zones before the hard layer, develops, they are able to produce some yields even in droughty-years in which the slow growing local types completely fail. From these studies it is clear that our chief

aim must be to produce a *drought escaping variety* which forms an elaborate root system and completes its growth sufficiently early so that it can escape the hard layer and thrive. Selection work in this direction has not been of any help. As the remedy lay in the evolution of short duration types for a more assured crop return, attempts were made to reduce the duration of the local types by hybridisation. Four economic, local types were crossed with the American varieties, " Milo " and " Wonder ", which flower in 50—60 days. F_1 and F_2 progenies of these crosses are under study. From these progenies, types with short duration and white grain, together with a good amount of straw, will be selected. Meanwhile M. 47-3, an early Bombay sorghum, which has fared well in all the 5 years under study, will be distributed to the ryots till a superior evolved strain replaces it.

3. *Malting.*—The work of malting sorghum is being done by the Government Agricultural Chemist. The Millets Specialist has so far supplied him with seeds of 51 varieties, representing a world-wide range. The chemist has found 17 of these satisfactory as regards malting value from preliminary trials and based mainly on analytical data. It is his experience that a low protein content tends to produce a better malt with a higher extract, and a low fat content enhances its keeping qualities. He is attempting to lower the fat content of malt by modification of malting operations.

BHOPAL.

General.

Jowar holds an important place in the agricultural economy of Bhopal State. It is grown almost all over the State, but the chief centre for the cultivation of Jowar lies in the Western District of the State, comprising of Duraha, Sehore, Ichhawar, Ashta, Jawar and Nasrullahganj tahsils.

In the major part of this area Jowar and cotton are grown year after year in rotation and jowar forms a main food material of the cultivators. The importance which the farmers attach to this crop can be gauged from the reverential names given to it, *i.e.* " Permeshwari and Jowar Mata ". The following figures supplied by the Director of Land Records give the actual position of jowar in this State.

Total land under jowar.	*Yield per acre.*	*Total yield.*
1,44,259 acres.	462 lb.	29,753 tons.

It will be seen from the above data that the yield per acre is rather low.

Varieties.—It has not been possible for the Agriculture Department so far to carry out research work on jowar. A commencement has, however, been made this year, on a small scale, in conjunction with the cotton improvement scheme.

Owing to abundance of pasturage very little jowar is grown as a fodder crop, in which case it is sown very thick, and the yellow variety is preferred because its stem is supposed to be soft and sweet. Grain jowar is given a distance of about 2 ft. between rows and one foot between plants. So far only kharif jowar is sown and no distinction is made between early and late varieties. Drought is seldom a serious

trouble in this State ; hence no drought resistant varieties are grown. Four varieties of jowar have been observed, namely :—

1. Grain—White, large, plump and open.
2. Grain—White, medium and slightly shrivelled.
3. Grain—Yellow, large and closed.
4. Grain—Yellow, medium and closed.

The place cf jowar in planned agriculture.

(a) *Economics of jowar.*—The most important fact to be remembered is that the jowar crop is harvested at a time when the cultivator has hardly any other cereal to eat. The expenses and income per acre are given below :—

Cost of production of jowar per acre (dry and without manure).

	Rs.	A.	P.
Two bakhering in hot weather @ as. 8 each ..	1	0	0
One bakher before sowing in June	0	8	0
Sowing with desi drill	0	11	0
Cost of 3 seers of seed @ Rs. 20 per mani ..	0	6	0
One weeding and howing, etc. by 10 women @ as. 2	1	4	0
Harvesting expenses 10 women @ as. 2 ..	1	4	0
Rent of land	3	0	0
Other Misc., supervision and watching charges..	1	8	0
Shifting of crop of threshing floor	0	8	0
Extracting seed by threshing and winnowing ..	1	0	0
Total ..	11	1	0

Income per acre.

	Rs.	A.	P.
Cost received for yield obtained (7 mds.) @ Rs. 7 per mani.	12	4	0
Karbhi	0	12	0
Total ..	13	0	0
Less ..	11	1	0
Actual income ..	1	15	0

Rs. 1-15-0.

(b) *Rotation.*—Jowar forms the most important rotation crop in the cotton cultivation in this State. It is grown both as pure crop and mixed with tuar (cajanis indicus). Only jowar rotation is used in cotton cultivation.

(c) *The Yield of Jowar.*—The yield per acre is 462 lb. This is very low indeed.

(d) *Ways of increasing the yield of Jowar.*—1. Selection. 2. Three year rotation. 3. Manuring. 4. Pest control. 5. Timely weeding and 6. Drainage.

For several years Jowar has suffered heavily on account of water logging and heavy rains. The most important problem, therefore, is either to introduce large scale soil drainage or to obtain a variety which will thrive under the conditions mentioned above.

Pests.

(a) *Smut.*—This is quite common and is responsible for considerable loss to the cultivators. Sulphur dusting of grain before sowing is being encouraged.

(b) *Borer.*—Several types of borers have been observed and picking is being demonstrated, but the problem needs scientific investigation.

(c) *Depredations by wild animals and birds.*—Wild animals cause a great deal of damage in the early stages of growth. Cheap methods of fencing within the means of cultivators, therefore, need to be studied. Greater part of the State grows open grain variety which is easily attacked by birds. The Department is encouraging the cultivation of a closed grain variety but the problem needs investigation.

(d) *Chikta.*—This is occasionally observed and requires investigation.

PUNJAB.

Jowar is and has been the premier fodder crop of the Punjab from ancient times. Approximately two to two and half million acres are put under it annually. There is no other single fodder crop in cultivation which commands so much popularity in this province. Although it is used as a food grain in Central Provinces and Southern India, here its importance as such is negligible. Its cultivation is not restricted to any particular tract of the Punjab, but is widespread. It is all round good fodder crop and suits practically all sorts of climatic and moisture conditions obtaining in this province. Barani Canal and well irrigated tracts can all boast of large areas under it. It is also very suitable for cultivation in mixture with other leguminous fodders and large areas are put under it as such every year.

*1. *Varieties.*—Breeding work on this crop was started in the Punjab about a dozen years ago with a view to evolve superior fodder strains. The crop already in cultivation consisted of a mixture of various types and attempts were made to separate them. Although both sweet and insipid types are cultivated, there is a greater demand for the former, as in addition to being more palatable, their nutritive value is higher. At present two superior selections of fodder jowars—one sweet and one non-sweet have been recommended by the Department and are becoming popular among the cultivators. Some other promising selections have also been isolated and tested. The results so far obtained are highly encouraging. They will be released for cultivation in the near future.

Work on the improvement of grain yielding capacities has also been going on and it is hoped to make available some good grain types to the farmer.

Kharif and rabi.—In the Punjab, Jowar can only be cultivated during the Kharif and no rabi varieties either exist or have any chance of success.

Early and late.—The most popular varieties in this province are the mid season ones. Although an exceptionally early strain was evolved, it

gave much lower yields than the mid season varieties and hence was not taken up. All the work has, therefore, been directed towards producing strains which would meet the requirements of the Punjab cultivator. The late varieties, such as those cultivated in the South of India, generally do not mature seed as their earing time falls in mid winter. If cultivation of those varieties was taken, all seed would have to be imported every year.

Drought resistant varieties.—As mentioned above jowar in this province is cultivated both under irrigated and unirrigated conditions. The variation in rainfall in the unirrigated tracts is considerable ranging from 6 in. to 35 in. annually in the plains. The vareties recommended by the Department have been tested under different conditions of rainfall and have found to be drought resistant to varying extents. The insipid strain that is, J. S. No. 20, has given very good results in areas where rainfall is as low as 15 inches, while the sweet variety, that is, J. S. 21 has given good results where the rainfall is over 20 inches. Thus the insipid variety is more drought resistant.

Striga resistant varieties.—So far no variety resistant to striga attack has been discovered, but work on this aspect is proceeding.

2. *The place of jowar in a planned agriculture both as to its economics and its value in rotations.*—Being a soil exhausting crop, jowar is not included in any rotation in the canal irrigated areas, where it is only cultivated as a fodder crop. In most cases it is cultivated in mixture with a leguminous kharif crop, such as guara : hence its importance in rotation is negligible in those areas. In areas of scanty rainfall, however, it is rotated with gram in years when there are late monsoon rains and gram can be cultivated after it.

3. *The Yields of jowar and ways of increasing them.*—The varieties introduced by this Department give yields of 10 to 36 per cent more of green fodder than the general crop. Thus the easiest way to increase the yields is to make available to the cultivator strains of decided superiority. This can be done by producing such strains at the breeding stations and maintaining pure nuclei so that the seed in the hands of the cultivator can be renewed from time to time. The higher yields resultant from the superior strains can thus be maintained.

4. *The pests and diseases of Jowar.*—

(a) *The fungus disease of jowar.*—The most serious fungus diseases of jowar in the Punjab are loose smut, long smut and red leaf spot. The mycologist is studying these diseases and attempts are being made to breed resistant strains.

(b) *The insect pests of jowar.*—Jowar borer is also a serious pest in the South-western tracts of the province so much so that some people are seriously considering discontinuing jowar cultivation in certain localities. The damage in non-sweet varieties is less than in sweet ones.

5. *Jowar in human and animal nutrition.*—Jowar, as previously stated, is mostly used for fodder in this province. Grain is eaten only in one or two districts. In the rest of the Punjab the grain is not used for feeding to animals as it is believed that it is very poor in nutritive value and is liable to harm cattle. The chemical and feeding analyses of green

jowar fodder, both from sweet and non-sweet varieties, have been carried out in this province and it has been found that the sweet strains are more nutritious. Some types have a very high sugar content, which may go upto 14 per cent. Chemical analyses at various stages of its growth, that is, pre-earing, maximum earing, milk, earing, milk, dough and ripe stages have been carried out.

6. *Other means of utilisation of jowar.*—There is a possibility of manufacturing syrups from sweet jowars, but this possibility has not been investigated so far.

SIND.

Introduction.—Jowar or 'Andropogan Sorghum' is of tropical origin and has been growing in Sind as one of the principal grain crops in Kharif season and is mostly grown in North Sind. Its grain forms the principal food for the poor people and its straw or Kadbi is the chief fodder for cattle. According to the Barrage scheme of irrigation, out of 27 per cent intensity of cultivation in Kharif season, this crop, forms 6 to 7 per cent for both fodder and grain purpose. It is sown after the main Kharif crop, *viz.*, Cotton. The average annual acreage under this crop for the last five years from 1933-34 to 1937-38 is 4·5 lacs acres.

Botanical classification and description.—The Botanical Research work was started on this crop with a view to classify the existing variety and also to evolve suitable, pure and high yielding strains of both grain and fodder for different tracts in Sind. Two species of Andropogan are found in Sind. The perrenial wild Baru (Andropogan halopensis) and annual cultivated jowar (Andropogan Sorghum). The varieties under the later are numerous and number about 62. These have been collected and classified. All the varieties are distinctly different from each other in their morphological characters. The classification is based on the following characters :—

1. Leaf mid-rib colour ..	Green or white.
2. Awns ..	.. Present or absent.
3. Earhead density ..	Compact, medium or semi-compact and loose.
4. Glumes (Colour) ..	Red, Black, Pale or white spotted.
5. Glumes ..	.. Partly covering the grain, *i.e.*, short or completely covering the grain, *i.e.*, long.
6. Grain colour ..	.. White, Yellow or Red.
7. Grain shape ..	.. Oval or flat.

Sorghums are classified in two main classes :—

1. Saccharine Sorghums—(Turi Jowars)—The stock of these varieties is more juicy-sweet and the leaf has green mid rib.

2. Non-Saccharine Sorghums (Kangar Jowars)—These are mostly grain varieties, the leaf mid-rib is white and the stalk is pithy.

Improvement by selection.—The main object of the work of selection has been *to improve the quality and the quantity of the grain and fodder.* With this end in view several promising strains have been evolved. These

are superior and yield about 15 to 20 per cent higher than local types and are mentioned as under :—

I. *Grain varieties* :—

Early maturing.	Medium maturing.	Late maturing.
1. Acho Bazigar.	1. Acho Kartuho No. 1.	1. Saoro Kartuho No. 1.
	2. Allakh No. 2.	2. Bagdar I.
	3. Depar No. 3.	3. Acho Kodri 25.
	4. Red Janapur No. 3	

The late maturing types are tall growing and high yielding. Red Janapur No. 3 and Acho Bazigar varieties are resistant to drought and high winds and are particularly suitable for Non-Barrage tracts.

II. *Fodder varieties* :—

Early ripening.	*Medium ripening.*
1. Achi Turi	1. Acho Kartuho Turi, No. 56.
2. Red Turi	

All these varieties are susceptible to striga. These have been sent to Poona to find out the resistant type.

The following statement shows the performance of all these improved strains during the last five years :—

Variety.	Flowering period (days).	Harvesting period (days).	Yield of grain per acre in lbs.
1	2	3	4
A. Grain Vzarieties.			
1. Saoro Kartuho No. 1	81·2	106·1	1062·0
2. Bagdar No. 1	84·7	110·3	1043·6
3. Acho Kodri 25	86·2	107·5	1098·0
4. Acho Karthuo No. 1	76·0	101·7	904·5
5. Red Janapur No. 3	79·1	105·8	823·0
6. Allakh No. 2	74·5	102·7	977·9
7. Depar No. 3	79·8	102·4	1207·0
8. Acho Bazigar	..	..	640·0
B. Fodder Varieties.			
1. Acho Kartuho Turi 56	77·9	103·1	847·4
2. Achi Turi	75·0	100·0	929·3
3. Red Turi	65·5	93·5	637·2

The following table gives the fodder yield and the analysis of juice of cane of the three improved fodder varieties :—

—	Average of three years.		
	Acho Kartuho Turi.	Achi Turi.	Red Turi.
Percentage of Juice	32·1	20·5	27·26
Brix Reading	16·16	18·27	19·57
Yield of green fodder per acre in lbs. ..	42,240	34,640	39,120

Improvement by acclimatisation :—

A. *Grain Varieties* :—

(a) *Punjab and Gujrat Sorghums.*—Several prominent grain varieties of Jowar from Gujrat, Karnatic and Punjab were tried. They were badly affected by stem borer. Besides, these were late maturing and gave low yield of grain than Sind jowar and were therefore rejected.

(b) American Sorghums.—Four varieties of American Sorghums noted below were tested. They were stunted in growth and gave considerably lower yield than Sind Jowars. They were therefore rejected :—

1. Spur Feterita.
2. Yellow Milo.
3. Kaffir Standard block-hull.
4. Kaffir block-hull.

B. *Fodder Varieties* :—

(a) *Punjab and Gujrat fodders.*—Fodder varieties from Gujrat and Punjab were tested. Punjab J-8 was the only promising strain giving good yield of fodder and it is therefore being studied in comparative yield trials.

(b) American fodders.—From amongst the foreign varieties Honey Sorghum variety from America has been found superior in both quality and yield of grain and fodder to all improved local types. It gives 500 to 600 maunds of good quality green fodder per acre.

Improvement by hybridisation.—Some of the high yielding grain varieties were crossed with variety Torh having very thick and heavy grain to further increase the yield. Following these crosses were made :—

1. Bagdar × Torh.
2. Allakh × Torh.
3. Acho Kodri × Torh.

From these three crosses five strains are fixed and are breeding true. Since last two seasons they are being tested in varietal test on field scale and have been found superior in yield to the parent. In single plant study they have shown better performance.

The following table gives the characters of hybrid strains and parents :—

Strain.	Average weight of 100 grains in grams.	Yield of grain per acre in lbs.
1. *Parents.*—		
(*a*) Bagdar 1	1·81	844·0
(*b*) Allakh 2	2·48	804·0
(*c*) Acho Kodri 25	1·83	..
(*d*) Torh	3·72	..
2. *Hybrids.*—		
(*a*) Allakh × Torh 4—54	2·75	1404·0
(*b*) Allakh × Torh 148—4	2·97	1532·0
(*c*) Bagdar × Torh 13—68	2·75	1384·0
(*d*) Bagdar × Torh 79—27	2·55	932·0
(*e*) Acho Kodri × Torh 104—5	2·78	1132·0

Another cross was made in the year 1932-33 between Saoro Kartuho No. 1 × Acho Kartuho Turi 56 with object of combining high yielding character of grain variety, Saoro Kartuho with high yielding and good quality of fodder type Acho Kartuho Turi 56 to produce a type of dual purpose jowar suitable both for fodder and grain production.

Ten promising hybrid strains of this cross are being tested in varietal test along with the parents for fodder and grain yield.

Pests and Diseases.—The Jowar crop seems to be fairly immune to insect pest and other fungoid diseases. The following insect pest, diseases however are noticed in some season :—

1. Stem-borer (Chilo Simplex) : This is a common insect pest on Jowar and causes great damage in certain seasons specially in late sown crop and late maturing varieties.

2. A very common disease of Jowar crop in Sind is known as '*smut*' which is locally called (Kani). This smut generally appears in two forms, *viz.*, *grain smut* (Sphaeclothec Sorghi) and *long smut* (Tolyposporium Filiferum). The attack of grain smut is very rare and could be controlled by treating the infected seed with fine sulphur powder before sowing.

With regards to long smut the counts taken on individual earhead in cultivators fields showed 0·37 per cent to 6·42 per cent attack in different varieties. No effective remedy against long smut has yet been found out. Experimental work has shown that Jowar crop sown in the beginning of June suffers less from smut than that sown in the later part of June.

3. *Striga.*—Very little damage is done by this parasite here. It is locally known as '*Angari*' and makes its appearance in end July and August when the crop is about two months old.

Mysore.

Area under Jola in several districts.

District.	1935-36 Acres.	1936-37 Acres.
Bangalore	975	851
Kolar	6,473	3,667
Tumkur	40,948	43,754
Mysore	219,719	217,057
Hassan	16,048	14,996
Shimoga	83,360	79,584
Kadur	28,748	28,528
Chitaldrug	283,638	277,214
Total ..	679,909	6,65,651

Both Mungar (Kariff) and Hingar (Rabi) varieties are being grown. Work done towards the improvement of both the varieties is as follows :—

(1) *Collection and classification* :—

Tumkur	32
Kolar	14
Chitaldrug	11
Bangalore	19
Mysore	19
Kadur	4
Total district collections .	99

Types studied	44	These are tried in bulks on the farm and on the raiyats' fields.
Selected strains	4	
Sorghum	2	
Maldandi Sorghum ..	2–1	
Sorghum	2–2	

Type plants selected from District Collections .. 155

(2) Study of methods of pollination in both loose and compact forms with a view to effect hybridisation.

(3) Selection of type plants with an eye towards earliness, yield and disease-resistance.

(4) Making row tests of the above selections to ascertain their performance as regards yield, etc.

(5) Developing striga resistant strains. Striga resistant strains received from Burma, from South Africa and from Dharwar....6.

(6) Developing through hybridisation a type plant having heavy compact head of local bili jola with big grains of Maldandi and resistant to striga.

Jola Earhead Study, Babbur Farm, 1958-39

No.	Variety.	Compact.				Glume enclosing seed.	Colour of the glume hairiness.	Colour of the seed.	Size of the seed.
		Tall.		Semi.	Short.				
1	Kedaru Hombale Jola ..	Tall	Loose	..	..	Open	White smooth glume ..	White	Small.
2	Do. ..	,,	,,	..	..	,,	Red-hairy glume ..	..	,,
3	Do. ..	,,	,,	..	..	Close glume.	Red smooth	Whitish red	,,
4	Maldandi	,,	,,	..	..	Open	White hairy	White	Big
5	Do. ..	,,	..	Semi	,,	,,	Reddish white hairy ..	,,	Medium.
6	Do. ..	,,	..	,,	..	,,	Chocolate hairy ..	,,	,,
7	Do. ..	,,	..	,,	..	,,	Reddish white smooth ..	,,	,,
8	Kesari Jola Acc. 110/2 ..	,,	..	,,	..	,,	Red hairy	,,	,,
9	Do. ..	,,	..	,,	..	,,	Bull chocolate hairy ..	,,	Big.
10	Do. ..	,,	..	,,	..	,,	Black hairy	,,	Medium.
11	Do. ..	,,	..	,,	..	,,	Red chocolate	,,	Big.
12	Ghikkanahalli (Sira) ..	,,	..	,,	..	,,	Black smooth	,,	Small.
13		,,	Loose	..	..	,,	White smooth Chocolate ..	,,	Medium.
14		,,	,,	..	..	,,	Whitish chocolate smooth	,,	,,
15		,,	,,	..	..	,,	Chocolate white ..	,,	,,
16		,,	,,	..	..	,,	Chocolate hairy ..	,,	,,

No.	Variety.	Compact.				Glume enclosing seed.	Colour of the glume hairiness.	Colour of the seed.	Size of the seed.
		Tall.		Semi.	Short.				
17		Tall	Loose	..	..	Open	Red white smooth ..	White	Medium.
18		”	”	Semi	..	”	Do. ..	”	”
19		”	”	..	..	Close	Chocolate smooth ..	”	Small.
20		”	”	..	..	Close open.	Black smooth	”	Medium.
21		”	”	..	..	Close	Red smooth	”	Small.
22		”	”	..	..	”	Black smooth	”	”
23		”	”	..	..	”	Chocolate smooth ..	”	”
24		”	..	..	Short	”	Reddish black smooth ..	”	”
25	Kampu Jola	”	..	Semi	..	Open	Chocolate white *smooth* ..	Red	Medium.
26	Do. ..	”	..	”	..	”	Black hairy	”	”
27	Do. ..	..	..	..	Short *big*	”	Chocolate smooth ..	”	Big.
28	Do. ..	..	Compact	..	Small	”	White hairy	”	Medium.
29	Do. ..	”	”	..	”	”	Deep black smooth ..	”	”
30	Do. ..	..	”	..	”	”	Black *hairy*	Reddish	”
31	Do. ..	Tall	..	Semi loose	..	Close	White hairy	Yellowish white.	Small.
32	Hadi Jola	”	Compact	..	..	Open	Reddish white small hairy	”	Big.

33	Do. ..	..	..	Big compact.	..	,,	Reddish white smooth ..	,,	,,
34	Do. ..	..	..	,,	..	,,	Reddish *white* small hairy	White	,,
35	Do. ..	..	..	,,	Short small.	,,	Chocolate smooth ..	Yellow.	Medium.
36	Do. ..	..	..	,,	..	,,	Reddish White smooth ..	Whitish yellow	Big.
37	Bili Jola	..	..	,,	..	,,	Blackish white small hairy	White	,,
38	Do. ..	..	..	,,	..	,,	Reddish white small hairy	,,	,,
39		..	..	,,	Short small compact.	,,	Black smooth	,,	Medium.
40	Do. ..	..	..	Semi Big compact.	..	,,	Red *chocolate* hairy ..	,,	Big.
41		..	..	..	Short small compact.	,,	Black hairy	,,	Medium.
42	Do. ..	..	..	..	,,	,,	White smooth	,,	,,
43	Do. ..	..	..	..	,,	,,	Red hairy	,,	,,
44	Do. ..	..	..	..	,,	,,	Do. ..	,,	,,

Central Provinces and Berar.

The most important disease of jowar in the C. P and Berar is grain head smut *Sphacelotheca Sorghi*. It can be completely controlled by dusting the seed with copper carbonate or finely powdered sulphur. One ounce and two ounce packets of these fungicides are sold in large quantities every year by the district staff.

Experiments are being carried out to find resistant varieties.

Head Smut of jowar (Sorosporium Rellianum) is of sporadic occurrence in these province. It has not been known to cause much damage. It has been found from experiments that the disease is soil borne. This smut is known in other countries to attack maize but in these provinces all attempts to infect maize with the fungus found on jowar have failed.

Loose smut of jowar (*Sphacelothea Cruenta*) is of no importance in these provinces. It is very rarely found here.

Long smut (Tolyposporium filiferum) has not so far been found to occur in these provinces.

Rust (*Puccinia purpurea*). It is occasionally known to occur in these provinces but it has not been found to be of any economic importance.

Aschochyta.—This chiefly attacks leaves. Infected leaves dry prematurely. No control measure has been found.

Bacterial Stripe disease. This disease has only lately been found to occur in this province. It is of sporadic occurrence. It is chiefly found on plants grown in low-lying water logged soils or in part of fields which are near "Nalas". This disease is under investigation.

Striga disease. This disease is generally confined to certain localities. In infected areas it can cause considerable loss of plants, certain varieties are particularly very susceptible to this disease whereas others are resistant, though not completely immune. It has been found that certain varieties even though considerably attacked by this parasite do not show any marked ill-effect, whereas there are other varieties which are much less capable of withstanding the effects of the infection.

Sprinkling coarsely powdered copper sulphate on the infected areas before the striga plants are in flower, has been found to control the spread of this parasite.

Physiological diseases of jowar have not been observed in these provinces.

Pests of Jowar.

1. *The Jowar Stem-borer—Chilo zonallus.*—The stem-borer is the most important pest of jowar crop. The caterpillars hibernate in the jowar stalks (kadbi in vernacular) which are stocked as fodder from October. These pupate about the beginning of rainy season. The moths emerge out in July and start laying eggs. From July till October it passes through 3 generations.

The nature of damage.—When the plants are young and the borer enters the stem, dead-hearts are produced. In fairly grown up plants, the vitality is greatly reduced. If 8-10 caterpillars attack a single plant it is killed.

The extent of damage.—In the month of July a few plants are affected where dead-hearts are produced. The attack gradually spreads till in the month of October nearly 50 per cent of the plants are infested. Sometimes in severe cases almost every plant is attacked.

Control method.—The only control method advocated is to preserve kadbi after the month of April in a chopped condition so that the hibernating larvae are killed.

2. The fulgorid bug—Pundaluoya simplicia. This bug is present every year to some extent but occasionally it assumes serious form and causes a good deal of damage by sucking the plant juice. The nymphs remain concealed in large numbers under the leaf-sheaths.

No effective control measure could be adopted as the nymphs are well protected.

3. *The juar Aphids.*—The Aphis (Aphis adusta) also appear during rains and assume severe form particularly if there is a continuous spell of dry weather during the season.

4. *The juar stem fly.*—This Anthomyid-fly only attacks the seedlings. The maggot bores the young stem and deadheart is produced.

BOMBAY.

Introduction.—*Jowar* (Andropogon sorghum) is a crop grown extensively in Bombay Province. It constitutes the essential grain and fodder crop over a greater portion of the Eastern part of the Province. In the famine tracts of the Province frequently subject to scanty rainfall it forms the main subsistence crop of both men and cattle.

*Table showing area in acres under jowar in some of the Principal Provinces and States during the year *1936-37.*

1. Bombay (British Province)	9,096,000	12,203,000
2. Bombay States	3,107,000	
3. Madras	5,121,000	
4. Central Provinces and Berar	4,658,000	
5. United Provinces	2,122,000	
6. Hyderabad State	9,250,000	
7. Remaining Provinces and States	2,842,000	
Total	36,196,000	

Out of a little over 36 million acres under *jowar* in the whole of India, over nine million acres or nearly 25 per cent is alone grown in Bombay Province. If to this figure is added three and odd millions grown in Bombay States then one-third of this important crop is grown in Bombay Province inclusive of the States. The other area which grows *jowar* equally extensively in this country is the State of Hyderabad in the Deccan with nine and a quarter million acres sown under it.

The distribution of *jowar* in India is chiefly confined to the area lying South of the Vindhya and North of the Nilgiris in the peninsular area.

* Figures from Estimates of area and yield of principal crops in India 1936-37 issued by the Department of Commercial Intelligence and Statistics.

Striga a root parasites.—From the figures given above the importance of the *jowar* crop to the peasants of peninsular India will be easily evident. The loss in this crop consequent on attack by fungi and insect pest is further accentuated by the attack due to the phanerogamic parasite *Striga*. This root parasite causes damage varying from ten to as much as fifty per cent. The parasite is widely distributed in India and has been reported from Punjab, Sind, Bombay, Central Provinces, Madras, Hyderabad State and Mysore. In some parts of Bombay, Central Provinces, Madras and Hyderabad the attack is extremely severe and has been the cause of serious complaint amongst the cultivators.

Difficulties of eradication.—The success in the eradication of any parasite depends to a very large extent on its habit and mode of multiplication. In respect of these *Striga* offers considerable difficulties for successfully combating its attack. It has a wide range of hosts (nearly 50) amongst the non-cultivated gramineae and a few dicotyledonous weeds. These non-cultivated hosts harbour the parasite and prevent it from being exterminated. Being a root parasite it grows in such close proximately to the hostplant that it is difficult to injure the parasite without at the same time injuring the host itself. For this reason cultural and chemical means of control have been found in-effective. To add to these disadvantages the parasite is prolific in seed production, a single plant is capable of producing a few thousand seeds. The seeds are extremely small and are too easily spread by wind to a distance from the parent plant. The seed is hard and is highly resistant to adverse conditions. It can remain in the soil without impairing its power of germinability for as long as fifteen years. It is capable of withstanding drought and water logging for some months at a stretch. These characteristics of the parasite make it extremely difficult to eradicate it once it has gained a good foot-hold in cultivated fields. From observation it has been found that *Striga* is never aggressive on its natural hosts, the non-cultivated grasses, but it becomes very virulent and spreads rapidly when attacking its acquired hosts the economic crops

Previous efforts at eradication.—Only one attempt has been made in the past at eradication of *Striga* on *jowar* and that too without success. Sawyer in Burma adopted the method of trapping *Striga* by growing a decoy crop of *jowar*. The first crop of *jowar* was ploughed up as soon *Striga* had come up profusely. It was found that the second crop of *jowar* which followed immediately was equally severely affected and gave a poorer return than if the first crop had been allowed to stand. Sawyer came to the conclusion that it would be difficult to induce cultivators to take to decoy cropping as it would entail loss of a crop on which the cultivator depends solely.

There are certain difficulties in adopting decoy cropping as a method of eradication. It would not be possible to trap all the *Striga* seeds with a single decoy crop. An infected field will carry seeds produced in different seasons and at different times during one season. *Striga* seeds undergo a period of dormancy during which time they ripen before they could germinate. This period varies from eight to eighteen months and longer. It would, therefore, be necessary to take a series of decoy crops of two or three in a season in successive years before the soil could be exhausted of all the *Striga* seeds. Regardless of all efforts made to check the spread of attack the prevention of fresh infection coming from *Striga*

plants harboured by non-cultivated grass hosts on waste lands, hills and forests areas would be an utterly impossible task.

Striga besides attacking *jowars* affects such important economic crops as sugarcane and rice. Both these crops fetch much better returns than *jowar*, therefore, any method of eradication, chemical or cultural that could be suitably applied to *Striga* on them cannot be advocated in the case of *jowar* because of the cost of eradication compared to the return from the crop.

At Pattambi Rice Research Station in Madras Province application of 4,000 to 8,000 lbs. of lime, it is reported, effectively checked *Striga* on rice without affecting the host crop. Dastur of Central Provinces advocates drenching the soil around stools of sugarcane with a two per cent solution of copper sulphate. This remedy tried by others has proved unsuccessful. Application of different chemicals to the soil to destroy *Striga* has resulted in failure. These chemicals unless used in strong doses have little effect on the parasite and high concentrations when used not only destroy the parasite but very severely affect the host crop itself. Another disadvantage of adding chemicals to soil is the damage it is likely to cause to the soil besides the expense the application involves.

Striga Investigation.—Three species of Striga are reported as attacking *jowar*, *viz.*, *S. lutea*, *S. densiflora*, and *S. euphrasoides*. Of these three the first two species are found to be distributed over a very wide area and have been observed to cause much damage to *jowar* crop. The last named species is localised in distribution and does not attack *jowar* severely.

Seeds of the three species of *Striga* show characteristic differences with respect to germination. Seeds of *S. lutea* and *S. densiflora* require the stimulus from their host before they can germinate. In the absence of the host stimulus the seeds will remain dormant in the soil for over a decade and do not loose their viability. Such seeds readily germinate when the host stimulus becomes available. For the initial germination of the seeds of *S. euphrasioides* host stimulus is not required. While the seeds germinate they cannot develop beyond the cotyledonary leaf stage unless contact with the host is formed. An interesting fact observed is the depressing effect of a host on the germination of seeds of *S. euphrasioides*. This species gives a higher percentage of germination when host is absent. For a number of years attempts to germinate the seed of *S. densiflora* in petri-dish cultures in the laboratory failed time and again while no such difficulty was encountered with *S. lutea*. Recently this difficulty was overcome by germinating the seed of *S. densiflora* in darkness. Seeds of both *S. densiflora* and *S. lutea* have been found to be photo-sensitive. While the former totally fails to germinate in light the latter gives a higher germination percentage in darkness as compared with exposure to light. *S. euphrasioides* is not affected by light.

Breeding of Striga-resistant jowars.—In the foregoing paragraphs some indication is given as to the importance of *jowar* as a grain and fodder crop and the extent of loss of the crop due to the attack of *Striga*. *Jowar* is a poor man's crop yielding a marginal profit of a few rupees and unless measures advocated are cheap and easily practicable and do not affect the small margin of profit the possibility of eradicating *Striga* on *jowar* is very remote. Several cultural and chemical methods tried in the past

in eradicating *Striga* have proved unsuccessful for one reason or another. In South Africa Saunders who carried out exhaustive tests has come to the conclusion that breeding of resistant varieties of *jowars* offers better possibilities of controlling the parasite than other methods. The investigations carried out so far appear to corroborate Saunders contention that breeding of immune and resistant types offers the only solution to overcome the attack by the parasite.

The knowledge so far gained in regard to factors influencing germination of Striga seeds is being used in evolving *Striga* resistant strains of jowars. The work that is being conducted at Poona under the aegis of the Imperial Council of Agricultural Research is progressing satisfactorily and there is some promise of evolving a few immune types within the next few years.

Diseases of Jowar.

In the Province of Bombay the important diseases of jowar are smut, seedling blight or hollow-stem, downy mildew and rust.

The life-histories of the smut fungi have been fully described, and the treatment of smutted seeds with fine sulphur is an effective method of control.

The seedling blight or hollow-stem in jowar is caused by *Macrophomina phaseoli*, a detailed study of which has already been made and described in a paper published in the Indian Journal of Agricultural Science (Indian Jour. Agr. Science 6, 1323-1334, 1936). The disease is of sporadic occurrence and in certain years it becomes epidemic in East Deccan following periods of heavy late rains and high temperature.

The downy mildew of jowar caused by *Sclerospora sorghi* has also been fully worked out (*vide* papers by G. S. Kulkarni and by Weston and Uppal and other workers). This disease is also not very serious.

The only disease of jowar on which much work has not been done is rust caused by *Puccinia purpurea*. There is conflicting evidence about the seriousness of the damage caused by this disease, but it cannot be said that the disease is of no consequence. It appears that rust is capable of doing damage in certain areas where environmental conditions are favourable to its development. Since jowar rust has been known to cause damage in the Bombay-Deccan, there is need for a small scheme to investigate the resistance of the different varieties grown in Bombay. This work should be linked up with the breeding work on jowar carried on in this province. The life-history of the fungus has not yet been fully investigated since the aecidial host of the rust is not yet known. There are only a few references on this rust in the literature. If a scheme on the investigation of jowar rust may materialise, I think this work should be done at Poona because rust is a problem in Bombay and suitable facilities for research exist at the College of Agriculture, Poona.

Drought resistance in Jowar.

The question of finding out drought resistant crops is as important as the one of—conserving soil moisture in famine areas. Work in this direction is being done at the Dry Farming—Research Station, Sholapur, mainly with the idea of ascertaining the power of drought resistance in

Jowar and of finding out such varieties as would exert the greatest economy in the use of water.

The results obtained for three years under pot-house conditions indicate that Jowar can endure severe and long period of drought after it has put forth about 2 months' growth. Thus plants experiencing drought towards the end of November or early in December can prolong their life till the end of February. At this time, the plants would appear to be practically dead, even the last leaf being affected. If profusely watered at this stage, they would renew their activity and make up for the lost growth. The total dry matter of these plants would then become almost equal to that of the normal plants but with very little or no grain. If no water is added, the plants would perish and give only 50 per cent their dry matter under favourable conditions of soil moisture.

A less severe drought extending over a fortnight or so appears to be of no small benefit to the plant. Under these conditions, while the normal dry matter of the plant remains almost the same or is favourably affected, there is a distinct increase in the yield of grain. The results so far discussed are based on feeler experiments and will have to be corroborated by further trials with a larger number or replications.

Closely allied to the problem of drought resistance is the question of the economic utilization of water by different varieties and the work done in this field at Sholapur indicated in no uncertain terms that the two important groups of Jowar, *viz.*, the loose and the compact, showed no significant difference in their transpiration coefficients in any of the three years of the investigation. The average value of the coefficient for the loose type was 398, while that for the compact was 410. The red-grained variety, locally known as Tambdi Jodgi, was also tried for three years but did not differ significantly in its water requirement with the other two. It may, however, be stated that this variety always displayed early maturity and consequently a low transpiration coefficient. In arriving at the transpiration coefficients the dry matter of the whole plant including roots has been considered. The growth of plants under pot-house conditions was found to be quite normal and comparable to that of the outside field plants. No market difference in the total quantities of water used by the three types, was noticed.

These results are contrary to the general belief of the cultivators that Jowar varieties with compact ear-heads require more water than those belonging to the loose-ear head or the red-grained types.

" The yields of Jowar and ways of increasing them."

Jowar occupies the most important position in the agricultural economy of the Bombay Province, as, of all the cereals grown in the Province, it occupies the largest area. The total area in the Province usually fluctuates from 8 to 10 million acres in different years. Two distinct types are grown during the two seasons, *viz.*, the ***Kharif*** and the ***Rabi***. Most of the crop is rain-fed, the area under irrigated jowar being less than 3 per cent. Of the two types, ***Rabi*** jowar is more important as it forms nearly 70 per cent of the total area under jowar in the Province and is mostly grown in the precarious tract of the Bombay-Deccan.

The Bombay Dry Farming Research Stations of Sholapur and Bijapur are concerned with the growing of the ***Rabi*** jowar under the precarious

rainfall conditions of the tract. The yields of *Rabi* jowar under these conditions depend upon a large number of factors, some of which are very complex. Amongst the factors that have been found to influence the yield of *Rabi* jowar at the two experimental stations, the seasons, the season and the soil type may be mentioned as the most important. Taking the yields obtained by the local cultivators' method for comparison, it is found that the average yield of jowar for a period of five years at Sholapur was found to be only 68 lbs. of grain and 240 lbs. of straw per acre ; actually, however, the yield varied from 41 to 106 lbs. of jowar grain and 123 to 400 lbs. of straw in different years from 1934-35 to 1938-39 according to the seasonal conditions. These yields are the average yield from a representative piece of land measuring 6·6 acres and containing 3 different soil types in nearly equal proportion, as found in the district.

In the same way at Bijapur, the average yield of jowar during the five years' period from a representative piece of land measuring 5 to 7·5 acres and consisting of 3 types in equal proportion, was 265 lbs. of grain and 509 lbs. of straw per acre. But according to the season, it varied from 114 lbs. of grain and 194 lbs. of straw to 421 lbs. of grain and 875 lbs. of straw in different years. It is noteworthy that the level of yield at Sholapur is extremely low owing to eroded and shallow nature of the soils, while the level of yield at Bijapur is much higher owing to less eroded and deeper types of soil.

Experimental work has been carried out at the two stations, *viz.*, Sholapur and Bijapur during the last five years 1934-35 to 1938-39, with the object of evolving suitable methods of cultivation for obtaining increased yields of jowar in normal years and for securing normal grain yield even in a year of drought. The method evolved for securing this object is known as the Bombay Dry Farming Method and consists of the following important items :—

(1) Ploughing the land with an iron plough once in three years.

(2) Placing series of bunds of suitable size on the contour lines and dividing the land into compartments for maximum absorption of rain-water.

(3) Four or five harrowings from June to September to form mulch and eradicated weeds.

(4) Wider sowing in rows 18 in. apart with a lower seed-rate of 4 lbs. per acre.

(5) Four interculturings from October to January in order to conserve moisture by mulching and by destroying weeds.

(6) Manuring at the rate of five cartloads per acre, which has been found to economise the use of water.

The adoption of this method has resulted in increasing the yields of Rabi Jowar at both the experiment stations. The improved method was tried on a field scale at both the stations on an area of nearly 24 acres at Sholapur during five years and on an area varying from 15 to 24 acres during five years at Bijapur.

The average yields by the local cultivators' method and by the improved method are given in the following table :—

Average yield in lbs. per acre by the cultivators' method and the improved Dry Farming method during 5 years (1934-35 to 1938-39).

Method.	Sholapur.			Bijapur.		
	Area in Acres.	Grain.	Straw.	Area in Acres.	Grain.	Straw.
Local cultivators' method	6·6	66	240	5 to 7·5	263	509
The Improved or the Bombay Dry Farming Method	24	134	324	15 to 24	507	679

The increased yield obtained by the improved method is seen both in grain and straw but the increase of grain is markedly higher than that of straw at both stations.

The increase is due to the combined effect of all items included in the Bombay Dry Farming Method. The increase due to each factor varies from year to year :—

(1) The most important single factor that contributes to the increase in the yield is addition of Farm Yard Manure treatment. This on the whole increased the yield at Sholapur by nearly 20 per cent and at Bijapur by 40 per cent.

(2) Mulching has been found to increase the yield in majority of cases, on deeper types of soil.

(3) Deep ploughing in alternate years or annual shallow ploughing increases the yield even by 20 per cent in some soils.

(4) The potential value of bunding in preventing runoffs and erosion may not be reflected in increased yield every year, but, in years of drought the increase is conspicuous.

(5) Moderate seed-rate ensure more grain yield especially in years of low rainfall.

(6) Rotation of jowar with cotton has been found to give distinctly increased yields of jowar, from the results of separate experiments at Bijapur laid down to test the value of rotation.

It may be mentioned that the average rainfall during the five years period was 26·2 inches at Sholapur and 20·9 inches at Bijapur. But the period includes two years of great scarcity and partial crop failures in both the tracts of Sholapur and Bijapur.

(4) *Pests and diseases of Jowar.*

(a) *Chikta* (The physiological disease of jowar).

The exudation of a sugary substance from Jowar leaves, commonly known as Chikta, is to be met with in the dry farming areas in the Province of Bombay and Madras and in the Hyderabad State. It has never

been observed on the Kharif crops but is mainly confined to the Rabi Jowar.

The secretion generally occurs in the months of November and December on vigorously growing plants, in the form of tiny globules on both sides of the leaf. These globules gradually increase in size and number, which may cover practically the whole of the leaf. The younger and tillered plants showing a vigorous vegetative growth are more affected than advanced plants that have produced earheads. Similarly, plants more exposed to wind and air such as those along the sides of roads and footpaths are more effected than those in the interior.

Chikta, as its name indicates, is a sticky substance which is hygroscopic in character. In dry weather, it crystallizes and falls off easily from the leaf surface. In humid weather, on the other hand, it actually flows down the stem and is then washed off by subsequent showers. Being sticky, it glues as it were the young folded leaves so much so, that in many cases further expansion of the plant becomes extremely difficult.

Though majority of plants may get affected, the intensity of exudation has never been found to be serious so as to affect the final yield during the last six years. Wherever it appears, it disorganizes the leaf tissue and destroys the chlorophyl apparatus of the plant. The affected parts develop a brownish colour during the early stages of the attack, which may get altogether bleached later on.

The work so far done at the Dry Farming Research Station, Sholapur, on the phenomenon of Chikta may now be summarised.

The exudation has been found to be physiological in character. It is not associated with either insect attack or fungal infection. Its appearance has been observed to coincide with the simultaneous fall of air temperature (50° to 55°F) and low humidity (50 per cent). It may occur twice or thrice during the same season whenever the above conditions prevail. Its relation to low temperature and humidity has been investigated by artificial production of chikta in the laboratory by subjecting the plant to similar conditions of low temperature and humidity.

The chemical analysis of the crystalline material, as collected by scraping shows that it contains about 80 per cent of hydrolysable sugars and a small percentage of glucose. If collected by washing the secretion as soon as it appears, it is found that the two sugars are present almost in equal proportions. The analysis of the affected and non-affected plants before the budding stage, indicated the same proportion of the two sugars. The total sugars present in the plant at this stage varied from 3·5 to 4 per cent. The total amount of sugar exuded by the plant varied from a tiny drop of the liquid to about 3 grammes per plant.

Hyderabad.

The State of Hyderabad, known as His Exalted Highness the Nizam's Dominions, occupies a very central position in the Deccan Plateau. Its position with reference to India also is rather central. Its altitude above the sea-level varies from less than 800 feet to over 2,000 feet. Its total area is 82,698 sq. miles and its population 14,436,148 (1931).

The usual three seasons hot, wet and cold prevail from March to May, June to September and October to February respectively. October is

usually dry and warm on the whole, except in the last week or twelve days, when it begins to cool off. The mean maximum temperature of the State is about 103°F and the minimum about 54°F. The average rainfall is about 32-35 in. a year. The normal for 40 years is 29·37 in. for the Maharethwada, 32·90 in. for the Telingana, 26·16 in. for the Karnatak Divisions and 30·37 in. for the Dominions. The State falls into three divisions, the Maharethwada, the Telingana and the Karnatak, comprising the north-western, south-eastern and south-western districts respectively. The Karnatak is the smallest of the three and covers three of the 17 districts of the State. The Maharethwada possesses five and the Telingana nine districts.

Jowar has been cultivated in Hyderabad for ages past. It is grown extensively in the State and is so general throughout, that, no particular part of the Dominions can lay claim to being termed its Jowar Belt. Of course, there is much variation in the area from district to district, but, no district grows less than a hundred thousand acres in any year. The ten-year average of the State from 1925-26 to 1934-35 works out to 9,024,676 acres which is about 30 per cent of the total cropped area. This enormous acreage is perhaps the largest throughout India, the Bombay Presidency being the only other territory with such an extensive expanse of land under the crop. At current rates the value of *grain alone* well exceeds 18 crores of rupees. Add to this the value of the *kadbi* or fodder, another Rs. 13 crores, and we have the gigantic annual worth of the crop as 31 crores of rupees. There is no other crop in the State that is anywhere near even a close second. This extraordinarily outstanding economic importance of the crop becomes evident from another point of view also, namely, that of its relation to the total human and cattle population of the State of Hyderabad. Thus looked at, we find that for every 6 human beings and every 6 head of cattle there is an acre of jowar growing somewhere in the State. In fact jowar furnishes the main item of sustenance to both men and cattle, and, is, indeed, their staff of life. The crop is certainly the *first crop* of the Dominions, and, to use a graphic American expression, it deserves to be known as *Queen Jowar.*

Of the three divisions of the State, the Maharethwada acreage is the largest, being on an average 3,007,968 for the ten-year period 1925-26—1934-35, followed by the Karnatak with its 2,412,901 acres and the Telingana with its 2,335,624. However, the most important jowar tract of the Dominions is its Karnatak Division, which grows its 2½ million acres in just three districts as against an almost equal acreage of the Telingana raised in nine districts and the 3 million acres of the Maharethwada grown in five districts. It is interesting to note that the area under jowar bears an inverse proportion in general to the relative density per square mile of human and cattle population. The obvious reason is, perhaps, that more space is available for cultivation in less thickly populated areas. Thus, District Gulberga, which has the largest jowar acreage (1,054,566) has only 154 persons and 141 head of cattle to the square mile as against District Medak with only a tenth of this acreage but the high human and cattle density of 215 and 235 respectively.

Another interesting feature to be observed is that the total jowar area of the State of Hyderabad has remained virtually the same in the past ten years, the difference between the acreage of 1925-26 and that of 1934-35 being only 182,646 in favour of the latter year. This is an increase of only 2·02 per cent. The increase in the population was twice as much in the

same period. Comparing the average total produce (Grain) of the first five-year period (1925-26 to 1929-30) with that of the second (1930-31 to 1934-35) a decrease of about $8\frac{1}{2}$ is revealed. However, this decrease is very likely due to seasonal factors and not to any falling off in acre yields. The latter period was particularly wet, the total precipitation for the State being over 21 per cent above the normal.

From the point of view of the seasons there are two kinds of jowar grown in His Exalted Highness the Nizam's Dominions. They are called *kharif* and *rabi* jowar. Each kind has numerous varieties bearing local names. The former is a monsoon crop. Planted in June it is ready for harvest by about November-December. The latter is a cold season crop. Sown in October, it is off the land by March-April. 55 per cent of the State crop belongs to the *Kharif* and 45 per cent to the *rabi* type.

The greatest area under Kharif jowar is found in the Telingana Division. where it is raised over more than $1\frac{1}{2}$ million acres. The next largest acreage is in the Maharethwada, namely, nearly $1\frac{1}{4}$ million. The smallest kharif jowar area is in the Karnatak Division, covering only 870,000 acres. In rabi jowar the Maharethwada leads with its $2\frac{1}{2}$ million acres followed by the 1 2/5 million acres of the Karnatak and the million of the Telingana. The greatest concentration of *kharif* jowar in the Telingana is probably mainly due to its greater rainfall by comparison with the other two divisions on account of its larger forest area of $5\frac{1}{4}$ million acres as against the 712,000 of the Maharethwada and 262,000 of the Karnatak. In fact 84 per cent of our forests are in the Telingana Division.

The Telingana soils are on the whole shallow and light, whereas those of the other two Divisions are heavy, deep and black. In the Telingana jowar is usually rotated with crops like castor, til, groundnut and even rice.

It is rotated with cotton and groundnut in the Maharethwada and the Karnatak. *Kharif* jowars on the whole are regarded as of inferior quality both in grain and *kadbi*. The best quality jowar even among the rabi kinds is locally called white *dagdi* jowar. It has usually non-tillering, thin to medium thick stemmed plants 5-6 feet tall and having compact club-like heads with close set pearl-white, ovate-rotund grains. The grain especially, but, also the kadbi, of this jowar nearly always sells at a premium over those of all other kinds. It is somewhat late-maturing and requires comparatively more moisture in the soil to give the best growth and production. Appendix I gives a list of a few of the *Kharif* and *rabi* jowars grown in the different districts of the State.

A study of the census figures shows that there is a very decided tendency for a steady increase in the population of Hyderabad. This applies not only to the human, but, perhaps also to the cattle population. Jowar as we have seen above forms the major food and fodder crop of the Dominions. Its already overwhelming importance is bound to increase with the lapse of time, which will make it necessary to have more and even more jowar in the State both in the shape of grain and fodder. This brings us face to face with the measures to be adopted for attaining the end. It can be done in two ways, both of which no doubt will have to be adopted in order to obtain rapid results. The one may be called the extensive and the other the intensive method.

The extensive method will consist of bringing more land, especially new tracts of it, under jowar cultivation. Although the existing area of jowar is itself very great, it is quite feasible still to extend it by another 10-15 per cent. The annual net area sown is only 80-83 per cent of the total available for cultivation, in which "current fallows" alone account for over 12 per cent and "cultureable waste other than fallow" for the remaining 5-8 per cent. Only a million acre increase in area would mean an enhancement in production of over a quarter million tons of grain and over half a million tons of fodder. True enough, all the 20 per cent cultivable area not sown at present would not be suitable for jowar raising for one reason or another. None the less an increase of a million acres at least is surely not an exaggerated possibility.

The intensive method of increasing production would be by increasing the acre-yield of the crop. This can be brought about in two ways, namely,

(i) the elimination of intrinsically poor yielding varieties, and

(ii) the isolation and dissemination of high yielding, improved strains evolved by straight pedigree culture or hybridization or both from the really productive.

Whenever it is intended to bring about without extending the area a quick enhancement in the acre-yield as well as the total production of a crop, especially one like jowar, which has been cultivated for ages past over extensive areas and has consequently resulted in the evolution and propagation of numerous varieties, good, bad and indifferent, suited to particular environments and localized needs, the primary need is to make as wide a collection of these varieties as possible ; to test their performance for three to five seasons *vis-a-vis* one another, eliminating thereby the poorer ones and retaining finally only a few of the very best for general cultivation. The *raiyat* should then be persuaded or even compelled by law to grow only such superior varieties. This withdrawal of the unremunerative varieties from general cultivation would automatically and rapidly bring up the average production per acre as well as the total production. However, in the case of a crop like jowar, which has little territorial preference as at least in the State of Hyderabad, care would have to be taken to test the collected varieties at several stations, well spread out over the State, in order to pick out groups of the better yielding varieties suited to particular environments, needs and tastes. This mode of attack is perhaps the quickest and cheapest of the two. In doing this it is neither necessary nor desirable nor possible to thoroughly study hundreds of varieties. What is meant is only that by running comparative tests we shall within a few seasons be in a position to know the relative productive capacities of all the important existing varieties besides being able to eliminate the inferior, unremunerative ones. The importance of such a procedure becomes obvious, when we refer to Appendix I, which, by no means an exhaustive list of all the kinds of jowar raised in just one State, presents no less than 73 kinds.

The second method of improving a crop, jowar in the present case, is comparatively more time-consuming and expensive. However, it is also essential and should come into play say in the third year of variety testing just discussed. Selection should begin in the intrinsically good varieties followed by hybridization for special features. Once the poorer varieties have been eliminated the selection of remunerative strains within the few

intrinsically superior and really productive varieties becomes so much more easy and rapid.

In any jowar breeding programme the one point to be kept in mind is that the crop is an important in Hyderabad the most important-food and fodder crop. It is a dual purpose crop. Hence whether the improvement is sought in quantity or quality, the grain as well as the *kadbi* have to be kept in mind. Breeding exclusively for grain or exclusively for *kadbi* has to be avoided in jowar improvement, except for some very special purpose.

In improving jowar, which is a food and fodder crop, the question of quality will also have to be kept in view. For, quality as far as it affects price is an item of commerce and as far as it relates to chemical reactions is a matter of public health. Thus, nutritive qualities or qualities of food also have their money-value, obvious and particularized, as expressed in their market price, and, potential or hidden, as affecting the national well-being and efficiency of the people and their cattle subsisting on jowar. Quality should, therefore, be well-defined so as to give proper direction to research along these lines. There are tracts in Hyderabad, where a decided preference exists in favour of yellow grained jowars and as definite a prejudice against white jowars. The reason offered is that the eating of bread made of the flour of the latter kind is injurious to health in that it gives rise to rheumatic pains in the joints, especially the knees. For rapid progress such preferences and prejudices will have to be considered in any programme of jowar improvement. We should try to know definitely what quality means and evolve methods of achieving it.

The seasonal factor is another item to be kept in mind in the improvement of the crop of any large jowar tract. For instance certain districts in Hyderabad have soil and climatic conditions more favourable to the raising of kharif jowars, whereas certain others have an environment much more suitable to the cultivation of the *rabi* kinds. Thus our Mehboobnagar District in the Telingana Division grows only 127,000 acres of *rabi* jowar as against 355,000 of *kharif*. On the other hand our Gulbarga District in the Karnatak Division grows over a million acres of rabi jowar as against a bare kharif jowar acreage of 91,000. This is a third reason, the first being the existense of a large number of local varieties and the second that of local tastes and notions, why there should be several jowar breeding stations in any large jowar territory.

Similarly, whether early, mid-early or late maturing kinds of kharif or rabi jowar are required for a tract, will be determined by its prevailing soil and climatic conditions. For instance in our Raichoor District quick maturing varieties are specially needed. There are other places in the State, where all the three kinds would do well. Here also, the need for more than one breeding centre becomes obvious.

In regions of sparce or uncertain rain-fall productive drout resistant varieties become a necessity. It is perfectly possible to build up such strains. Qualities of withstanding hot, dry weather with or without hot winds, restricted moisture requirements and capacity for efficient utilization of the limited available moisture will have to be bred for. Such conditions prevail particularly in our Raichoor District. Dwarfing of the jowars of such places would be one line of achieving success. For, it is well-known that good dwarf forms of jowar outyield standard varieties

under drouty conditions. Side by side studies in transpiration and wilting co-efficients would have to be undertaken.

There are areas in our State where Striga resistant varieties of jowar are particularly needed. One such region is found in our great Nizam Sagar Canal Zone in the Nizamabad District of the Telingana Division. No doubt similar conditions exist in other parts of India also. This would provide a line of work for co-ordinated research. A central station conveniently placed in the land could test out the different prolific strains of jowar evolved in different Provinces and States for their striga reaction, thereby greatly facilitating the isolation of really resistant and productive strains.

The genetics of jowar would also provide a good field for co-ordinated research. The inheritance of characters having an agricultural importance could be simultaneously undertaken at different stations according to a common plan or they could be studied in groups at different places. One such character is the retention of green leaves right upto harvest. This feature greatly enhances the fodder value of the crop and its mode of inheritance is well worth investigating. Similarly, another character of economic value is the " sweetness " in grain and kadbi. Sweet culms are said to be indicated by mid-ribs with a reddish, greenish or cloudy colour. A proper investigation into this point with the resulting clear understanding of the way in which it is inherited would be of immense value in evolving " sweet " strains from the leading jowar varieties of different tracts. The number, length and width of the leaves and the relative length of the leaf-sheath to the internodes of the culms are some more characters of agricultural and economic importance meriting investigation at more than one station throughout the country.

The pests and diseases of jowar provide another vast field for co-ordinated research. For instance, the stem-borer is virtually more or less master of the field. It has to be attacked from both the genetic and the entomological side. Co-ordinated research is here clearly indicated.

The fungus diseases of jowar like smut, rust wilt and leaf-sheath furnish an attractive field for co-operative research between the geneticist and the plant pathologist just as the physiological diseases provide a similar opportunity to the geneticist and the plant physiologist.

Studies in the nutritive qualities of jowar are of the utmost importance because of their bearing on national health. The " fancy " jowar of at least His Exalted Highness the Nizam's Dominions is the white grained *dagdi*. What are its nutrient qualities as compared to yellow red or orange grained jowars ? It may taste better, it may even be more digestible but may it not lack in some important ingredient like one of the Vitamins ? Here is where the agricultural chemist and the animal husbandman could run a combined research.

Jowar improvement work in the State of Hyderabad is being done by the Economic Botanist at just one station, namely, Parbhani, with one graduate assistant. Both *kharif* and *rabi* jowars are handled in the two seasons. With so modest a staff not much has been possible outside of producing high yielding strains from a few dozen varieties collected from the State and one or two from a couple of neighbouring provinces, nevertheless, four improved strains or kharif and four of rabi jowar have been

isolated in the past fve years and are being tried out this year against the locals on grant-in-aid farms and educated cultivators' fields in over a dozen places in the State. The productive excellence of these strains in grain and fodder over the local as revealed by comparative yield tests at Government farms for 4 years has ranged from 111·7—151·7 per cent (grain) and 51·8—108·9 per cent (*kadbi*) respectively for the kharif strains, and, 8-20 per cent (grain and *kadbi*) for the rabi strains. The one point kept in view in their evolution was the production of prolific grain and *kadbi* yield. It has not been possible with the staff and funds available to study problems of inheritance or resistance to pests and diseases. Still two samples of striga resistant jowar have been recently acquired and are under obervation at Parbhani.

Some of the most urgent problems needing investigation are an exhaustive botanical survey of the jowars of the State, a comparison of the relative productiveness of the most important varieties with a view to swiftly eliminating the poorer and starting selection work in the more remunerative ones, and a thoroughgoing study of the economics of the crop in various parts of the State. As has already been made amply clear the area under jowar is so vast, the number of varieties grown so large and the environmental conditions and local preferences so diverse as to make it impossible for a single station to do full justice to even a single one of these problems. A number of well-placed and properly equipped research stations alone could successfully tackle the task. There is little doubt that the taking up of co-ordinated jowar improvement work on an All-India basis would give a much-needed phillip to jowar research in the important jowar growing tracts of India.

Some Kharif *and* Rabi *Jowar Varieties grown in the State of Hyderabad.*

1. *Kharif.*—

1. Nanded White.
2. Nanded Yellow.
3. Tailkadi.
4. Haluk Napy.
5. Badi Jowar.
6. Ramchadi.
7. Varadi.
8. Thaingni.
9. Dokri.
10. Jagdhan.
11. Malamuri.
12. Mahoori.
13. Digrus.
14. Teltari.
15. White Pan Jowar.
16. Ram Taiki.
17. Mahori.
18. Baradi.
19. Peeli Kanchali.
20. Poti Tima.
21. Jag Dhan.
22. Pandhari Peeli.
23. Peeli.
24. Jhapri.
25. Nilwa.
26. Paccha Jonna.
27. Local White.
28. Local Yellow.
29. Motichura.
30. Dukar Muskuda.

II. *Rabi.*—

31. Lakdi.
32. Bidri.
33. Dagdi.
34. Kachpacki.
35. God Bedri.
36. Tambdi Bedari.
37. Laturi Dagdi.
38. Maldandi.
39. Raj Hansi.
40. Pandhari Jowar.
41. Red Jowar.
42. Male Mari.
43. Tamki.
44. Baradi.
45. Mudhol.
46. Kamlapuri.
47. Khadi Sawdi.
48. Rabi White.
49. Bhendi.
50. Dookri.
51. Jogdi Red.
52. Utnur White.
53. Chinnur.
54. Bid White.
55. Shalu.
56. Nilwa.
57. Manthi.
58. Geli.
59. Gundu.
60. Kati Jowar.
61. Hulgi Ebatti.
62. Hulgi Kagi.
63. Hulgi Red.
64. Dukkar Muskuda.
65. Motichura.
66. Dhandar Uttain.
67. Dhana Golo.
68. Goli.
69. Gaili Bedri.
70. Sirpur White.
71. Thaingni.
72. Janwada.

BIHAR.

Very little work has been done on the selection of the jowar crop in Bihar on account of the distinctly limited staff in the Botanical section. In 1933, however, the economic Botanist made a collection of samples received from all over the province and 95 pure strains have been established. These are now undergoing observational trials with a view to a ruthless elimination of all but the most promising types.

UNITED PROVINCES.

Classification and Varieties.

Jowar is an important crop in the United Provinces and occupies about 10 per cent of the total area under *kharif* crops. It is grown for seed as well as for fodder.

The Botanical Section took up the improvement of *jowar* by selection in 1924 and types 8-B, 5 Tall, 30C, 9 and 5 Short were selected on the basis of grain and fodder yield per acre.

Types with green midribs are found to have sweet stems. The maturity period varies between 140 to 160 days. The early varieties are low yielders. It was also noticed that dwarf varieties are more resistant to drought and do well in drier parts of the province such as Bundelkhand.

There is considerable variation with reference to height, length of the internodes, colour of midribs, dimensions of the leaf, size and nature of

the cob-compact or loose, character of the glume, the number of grains per spikelet, and the colour, size and shape of the grains.

The *jowars* are classified by a number of scientific workers on some of these characters. The classification of *jowars* into easily distinguishable groups is however found to be difficult due to the absence of definite vegetative and floral characters. Numerous agricultural varieties exist as the crop has been cultivated from ancient times and a number of grain as well as fodder varieties with local names to distinguish them have been mentioned in reports of experimental stations of the Agricultural Department in India.

A paper was recently published on "Studies on Indian Millets. Types of *jowar* isolated at the Government Research Farm, Cawnpore" by Dr. Sabnis, Economic Botanist to Government, United Provinces, which deals with the types isolated from samples received from all over India.

Economics of Jowar.

Jowar forms a necessary part of cropping programmes in these provinces, largely on account of its value as a fodder crop. As an article of food for human consumption, *jowar* grain is considered next in importance to rice. Its economics do not seem however to have been properly investigated and there is scope for study in this line.

Improvement of the Crop.

There is varying percentage of natural cross pollination in different types of *jowar*. It is found that compact types are better yielders and have a very small percentage of natural cross pollination. The methods followed at present for the improvement of this crop are cultural and selection.

The *jowars* are susceptible to a number of fungus diseases and insects pests. The principal diseases affecting this crop in these provinces are Smut and Helminthosporium. The former appears in a sporadic form and is not serious. The latter is very common and affects the outturn and quality of grain and fodder. Rust and wilt are not important for the United Provinces. Amongst the pests, stem borers—Chilo zonellus and Chilo simplex—cause considerable damage to the crop and their incidence is found to be greater in types which have sweet stems. Another pest which has been marked at Cawnpore, on the flowers only, is an adult beetle. No regular systematic investigations have been undertaken to study the incidence and the intensity of attack of fungus and insect pests in different types. There seems to be therefore scope for evolving types resistant to these diseases and pests.

Some of the types lodge very badly. The crop also suffers from drought. It may therefore be possible to evolve types which would have a better stand and would be drought resistant. The eating quality of grain also needs investigation.

It must however be remembered that in any scheme which may be undertaken for the improvement of this crop, either by selection or by hybridization methods, special arrangements would have to be made for raising pure seed on a large scale and maintaining the types in pure condition.

As far as these provinces are concerned, types 8-B and 5 Tall are found satisfactory as far as the yield of the grain and fodder is concerned but great difficulty is being felt in rasing pure seed on a large scale and maintaining its supply.

A crop which is stunted in its growth on account of the failure of the monsoon is said to develop the poisonous hydrocyanic acid and it is risky and dangerous to feed such stunted plants to cattle. It is not grown for fodder purposes for this very reason. before the rains. As *jowar* forms an important fodder crop, it is desirable that the actual causes of the development of this poisonous acid should be investigated.

There is the usual practice of silaging *jowar* for use in the cold weather. It is silaged in pure condition but if *gowar* or leafy portions of the groundnut crop could be used along with *jowar* to form a sort of mixed silage, there would be considerable increase in the fodder supply for cold weather. The problem needs investigation.

There is no over-production of *jowar* grain in these provinces and there will not be sufficient seed available for malting purposes. But the malts are becoming quite important these days, and it is desirable that malting qualities of grain from different types should be studied.

Problems for Investigation.

1. Correlation of morphological characters with quality of fodder.

2. Difficulties are felt in establishing purely fodder varieties, on account of difficulties of raising seed. This accounts for the practice of using the same varieties for grain as well as fodder.

3. *Jowar* being an exhausting crop the most economic rotation needs to be found out for different tracts. To examine the comparative merits of a 2, 3, 4 or 5 years rotation with other crops.

4. To evolve disease and pest resistant varieties.

5. To evolve varieties less susceptible to lodging.

6. To evolve varieties resistant to drought and suitable for dry tracts.

7. To evolve varieties which can withstand waterlogged conditions to some degree during the earlier stages of growth.

8. Watching the grown crop against damage by birds is expensive. If a variety with grain sticking to the glumes can be found, the damage by birds would be less and the cost of watching would be reduced.

9. Determination of the causes of development of hydrocyanic acid.

10. Effect of various chemicals on the preservation and quality of fodder. To investigate the possibilities of preparing mixed silage.

11. Study of malting qualities of different types.

NOTES ON THE NOTES BY THE AGRICULTURAL COMMISSIONER WITH THE GOVERNMENT OF INDIA ON JOWAR IMPROVEMENTS.

(1) *Plant Breeding work.*—This all means the collection of the available jowar varieties to suit different conditions of soil and climate and we

may have to work for the improvement of fodder and grain or both types and to select types to suit every tract.

(2) *Agronomical work.*---The place of jowar in a planned agriculture both as to its economics and its value in rotation :—

Jowar is very important economical crop for the cultivator and there is no other crop to replace it to provide grain and fodder to him. In rotation jowar is a fibrous and shallow rooted crop and is rather hardy as compared to wheat or cotton. In many places jowar is taken as mixed crop with legumes such as udid, mug, tur, in Kharif season and peas, lentil, wal and gram in rabi season.

Experiments will be required to study the rotational effects on the soil fertility and also to study leguminous mixtures and work out mixture as against sole crop of jowar. As for example bajri and tur mixture on the College farm is giving about 30 per cent to 40 per cent more yield of bajri than non-legume mixed bajri crop.

As fodder crops will be early and will not exhaust land, better cultivation can be given which may have the advantages of partial fallowing. In some places second crop of legumes for fodder or for rotational purposes may be taken if there be late rains.

(3) *Yields of jowar and ways of increasing them.*—The average yields of grain jowar in Bombay Province are as under :—

Gujarat—about 1,050 lbs. grain per acre for Kharif.

Gujarat—about 700—800 lbs. grain per acre for Rabi.

Khandesh—about 700—800 lbs. grain per acre for Kharif.

Deccan—about 500—600 lbs. grain per acre for Rabi.

Karnatak—about 700—800 lbs. grain per acre for Rabi.

The yield figures of various varieties on different kinds of soil and climatic conditions will have to be collected.

At present the common defects are that it is irregularly and thickly sown and requires thinning to be done for grain soon after germination.

The following four points will increase the yield :—

(1) Suitable varieties.

(2) Regular spacing and distribution of seed, *i.e.*, wider sowing and thinning out in lines for grain and wider sowing and thicker in lines for fodder.

(3) Clean cultivation by wider spacing clean cultivation will be easy and as weeds are killed and moisture conserved the yield of jowar will also increase.

(4) Growing mixed legumes with jowar or growing of late legumes after harvest.

(4) *Pests and Diseases of Jowar.*—The question on diseases, etc., may be solved and easier solution must be found out by Entomologists and Plant Pathologists, etc.

(5) *Jowar in human and animal nutrition.*—This is for the Chemists and Nutrition Experts for analysis and feeding trials. This can also be tried for feeding cattle, etc.

(6) *Other means of utilisation of jowar.*—This may also be investigated.

APPENDIX LXXVII.

Note on Subject No. 31 (d) :—Report of the Sub-Committee on work on quality of crops at the Imperial Agricultural Research Institute.

While considering the scheme for the development of certain lines of research at the Imperial Agricultural Research Institute, New Delhi, the Advisory Board in May 1939 recommended that the proposals might be sanctioned subject to the condition that the questions relating to quality of crops (*vide* Sir John Russell's recommendations 10 and 11 reproduced below*) should be further discussed by a Sub-Committee consisting of Lt.-Col. E. Cotter, Dr. W. Burns, Mr. A. M. Livingstone and Rao Bahadur B. Viswanath. The Sub-Committee met on the 11th November 1939 and considered a note on the Subject (Annexure I) put up by the Director, Imperial Agricultural Research Institute. The report of the Sub-Committee (Annexure II) is now for the consideration of the Board.

ANNEXURE I.

Note on the proposed work on quality of crops at the Imperial Agricultural Research Institute.

By B. Viswa Nath.

At its meeting in May 1939 the Advisory Board, while giving its approval to the technical memorandum submitted by the Director on certain lines of work at the Imperial Agricultural Research Institute, recommended that the questions relating to quality of crops (items 10 and 11 of the Scheme) should be further discussed by a sub-committee consisting of Lieutenant-Colonel E. Cotter, Dr. W. Burns, Mr. A. M. Livingstone and Rao Bahadur Viswa Nath.

Items 10 and 11 relate to research on the quality of food crops with reference to improvements in the dietary of the people and to the quality requirements of the commercial and industrial crops. In the technical memorandum referred to above the larger aspects of research with reference to quality for nutrition and for the special requirements of trade were discussed briefly. In doing so, reference was made to the trend of recent research and thought in regard to the influence of plant metabolism on the composition of the plants and their end products which figure so very largely in the diets of human beings and animals and in commerce and industry. This note describes the origin and development of the newer knowledge of plant nutrition, the discovery of the association of soil and plant nutrition with animal and human nutrition and the

---

*(10) *Co-operation with the Health Department in investigations likely to* improve the quality of the dietary of the villagers, *e.g.*, practicable methods of making good the deficiencies of the customary diets : the effects of proved mineral deficiencies in soils on the nutritive value of cultivated food stuffs.

(11) Co-operation with the Marketing branch in making or arranging for investigations likely to improve the market value of Indian agricultural products. This work should be confined, however, to investigations likely to come to a successful issue, vague investigation in "quality" should either be avoided, or done on a large scale as described on page 23.

significance of the newer knowledge to our current agricultural and nutritional problems, and shows the fundamental nature and practical value of the proposed researches.

The Newer Knowledge of Plant Nutrition.

In 1926 and in subsequent years the writer of this note, as the result of his own investigations and those carried out in collaboration with Sir Robert McCarrison (Viswa Nath, Jour., Madras Agric. Students' Union *14* : 19, 1926 ; Memoirs, Dep. Agr. Chem. Series *9*, 85, 1927 ; McCarrison, Ind. Jour. Med. Res. *14* : 361, 1926) called attention to the following experimental findings :—

1. The fundamental nutritional requirements of plants are similar to those of animals and human beings in that plants require accessory food factors similar to vitamins, for proper development and reproduction.
2. Organic matter from organic manures, such as cattle manure, has as one of its functions the supply of these accessory factors for plants.
3. There exists in nature a cycle or chain of these accessory or growth factors which has been defined as, soil—organic matter—microorganims—plant—animal—microorganims *cum* organic matter—soil.
4. Soil conditions and the nature of manures or fertilisers available for the nutrition of the plant modify the composition of the plant and the *seed* value and food value of the grain.

These findings not only did not receive general acceptance but even roused opposition, due partly to our knowledge of the problem being incomplete and partly to the difficulties experienced in getting out of the narrow view points resulting from a too limited experience. The hold of Lisbig's mineral theory of plant nutrition for nearly a century, was too strong to be easily shaken, although practical and scientific agriculturists and horticulturists held farmyard manure and composts in high esteem.

Recent evidence in support of Viswa Nath's finding.

In the few years that have elapsed sufficient data have been obtained in different parts of the world with the result that all the foregoing findings have gradually come to be appreciated.

In June 1937 the Royal Society of London (Proc. Roy. Soc. B. *124* : 1, 1937 ; Nature *140* : 161, 1937) held a discussion on growth factors. After considering the available evidence the conclusion was reached that the case established in the nutrition of animals was equally well established in the nutrition of the most diverse varieties of cells ; namely, that all cells from the lowliest bacterium to the cells of the highest animals were enabled to carry out the series of reactions by the agency of substances mostly of a nature akin to those in animal metabolism.

In December 1938 Auchter (Science *89* : 421, 1939) in his Presidential address to the Agricultural Section of the American Association for the Advancement of Science, had drawn attention to the inter-relationship in soil-plant-animal and human nutrition, and said that agricultural scientists hitherto thought of crop production and food production too

largely in terms of quantity and that it would be no revolutionary step to *think in terms of nutritional quality* as well.

Wrench (Brit. Med. Jour. Feby. 11, 1939, page 275) in an article on soil and health, stressed the importance of well nourished soil and plants to the health of animals and human beings.

Pfaff and Pfuatzer (Angewndte Chemic, 1937), reviewing the results of German experiments, stated that manures and fertilisers not only tend *to stimulate growth and increase crops but also add to the vitamin content* to the extent of one hundred per cent. in some cases, and that the results of the tests varied according to the soil and that plants grown in rich and fertile soil were superior as to the percentage of their vitamins.

Kagl and his associates isolated, from urine, farmyard manure and a number of organic manures, auxins—the growth factors of plants—and *have shown that auxins* or phytoharmanes play a definite role in many life processes of plants. The work of Thimman (Jour. Gen. Physic. *18* : 25, 1934), of Link and his associates (Nature *140* : 507, 1937) and that of several other investigators provides evidence that the effect of green manures, dung, urine, compost and humus soils may be due to the heteroauxin and for similar substances produced by fermentation.

The trend of research and its findings is distinctly to lend strong support to Viswa Nath's findings made thirteen years ago, and to provide further and more evidence in establishing the universal nature of the fundamental principles of nutrition in general and the unity in the essentials of physiological mechanism in all life.

Manuring and " Seed " quality.

Viswa Nath (Loc. cit.) has shown that manurial and fertiliser applications are capable of reacting on plants not only by increasing yields but also by affecting the crop growing quality of the seed. The work of Kruger (Landw. Jaharb *66* : 781, 1927) and of Kotteneier (Kuhn. Arch 15) on potato, the investigations of Tallarico (Mem. Accad. Italia Biol *3* : 5, 1932) on millets and other cereals, the work of Thompson (Proc. American Soc. Horti. Sci. *34* : 599, 1937) on lettuce seed, of Pfaff and Roth (Biochem. z *297* : 137, 1938) with barley and the work of Beuchamp and Lazo (Int. Sugar. J. *41* : 70, 1939) show that manures and fertilisers given to the parent plant affect the germination of the seed material and the growth ability of the young plant. Albert et al (Amer. Potato Jour. *16* : 16, 1939) compared the seed value of potatoes grown on sandy loam and peat respectively. Four years' trials in 1934, 1935, 1936 and 1937 showed that seed raised on peat soils grew more vigorous plants and gave significantly increased yields than the seed raised on sandy loam.

Manuring and Food value of Crop.

McCarrison (loc. cit) using the same grains as were used by Viswa Nath in seed and vegetation experiments, has shown that the nutritional value of the grain was affected in a similar manner, and that the vitamins essential for growth and health were lower in the grain from unmanured or chemical-manured plots than those in the grain raised with organic manures. Repeat experiments by Viswa Nath confirmed the above results of McCarrison. Latter, Viswa Nath found that the nature of proteins in herbage and grain varied with manuring.

Tallarico [Mem. Accad. Italia Biol *3* (1) ; 5-325, 1932] carried out experiments which showed that natural manures showed specified effects not exerted by artificial fertilisers and generally that seeds from plants that are over nourished during the growth period have less vitality than seed from a poorer soil. He has further observed that seeds grown under arid conditions have a greater germinating power and more vitality than seeds grown under humid conditions. Thompson (Proc. Amer. Soc. Horti. Sci. *34* ; 599, 1937) has drawn attention to the influence of fertiliser treatment and time of ripening on the germination of lettuce seed. Beuchamp and Lazo (Int. Sug. J. *41* ; 70, 1939) discussing the relation between vigour of seed and nutritive elements in sugarcane setts have stated that in the case of two months ratoon cane shoots, the vigour of the " seed " appeared to depend on reserve nutrients. Kruger (Landw. Jaharb *66* ; 781, 1927 ; Bied. Zentra 57 ; 156, 1928), Kotteneier (Kuhn. Arch *15*) found the quality of seed potatoes distinctly influenced by manuring. Calcium cyanamide and sodium nitrate gave poorer seed material compared to farm yard manure. Pfaff and Roth (Biochem. z *297* ; 137, 1938) reports that barley grains with a high nitrogen and vitamin B content have a higher rate of germination than those with a low content and that young plants grown from the former are superior in growth ability as well as in chlorophyll and vitamin content.

Viswa Nath (1927 loc. cit.) and McCarrison (1927 Loc. cit.) showed that the nutritional value of grains and herbage depends on the environmental conditions such as soil, moisture and fertilisers. Tallarico in 1932 (loc. cit.) reported the results of experiments in which young turkeys fed on grains grown with stable manure came through the critical period of growth with fewer deaths and greater vitality than those fed on grains grown with chemical fertilisers. Rowland and Wilkinson (Bio-Chem. J. 1933) record the results of tests in which seeds from a grass plot manured with cattle manure had a higher nutritive and curative value than those from a plot fertilised with artificial fertilisers.

Wachholder and Nehring (Bodenk. Pflanzenerunhr, *9/10* : 709, 1938) have stated that in general the value for tubers manured with farm yard manure was greater and less affected by cooking than those for tubers grown with mineral fertilisers only.

Nalivkin (Abst. Chem. and Ind.) investigating the effect of fertilisers on crop yield and grain quality of certain wheats reported that the best results are obtained with farm manure.

The work of Thomas and Thompson of the King's College, Newcatle on Tyne (Jour. Soc. Chem. Ind. *57* ; 210, 1938) on the composition of grass under manuring, has shown that protein digestibility varies with the nature of manuring. With grass raised with dung alone, dung *plus* phosphate alone showed 64 to 69 per cent protein digestibility. In the case of grass raised with ammonium sulphate alone or without manure the protein digestibility was 58 per cent. These results lend strong support to those obtained by Viswa Nath (Ann. Rep. 1933-34 to 1937-38) with differently manured millets and wheat. According to him high nitrogenous manuring does not necessarily increase the protein content although the nitrogen content of the grain and herbage may be increased. This is

further supported by the investigations of Smallfuse (Phytopath. Z. *5* ; 207, 1937) who observed that high nitrogen content in plants resulting from excess of nitrogen supply is due to an increased proportion of soluble nitrogen rather than protein nitrogen. Likewise, Rudolph Berks (Bodenk. U. Pflanz. *12* ; 129, 1939) from an examination of mature grains of wheat, barley and oats stated that nitrogen increased absolutely with its increased application to the soil but that the excess nitrogen accumulated as amides. In similar experiments with wheat, Walter Baumeister (Bodenk. U. Pflanz. *12* ; 175, 1939) reported similar conclusions on the modification of the composition of wheat by fertiliser treatment.

Howard in the course of a lecture (Chemistry and Industry) stated that wheat straw from fields manured partly with organic matter has been found to last as thatch for ten years while straw from similar land manured with artificials lasts five years. This observation, according to Howard, has for its basis the careful records kept on Viscount Lymington's estates in Hampshire. Howard has further referred to the definite experience and views of merchants in Worcestershire and of a grower in Walton-on-Thames that the highest quality of crops are always produced with farm yard manure.

The significance of the newer knowledge to agriculture and nutrition.

The implications of the newer knowledge on the inter-relationship between soil, plant and animal nutrition are many and far reaching. Its practical bearing on the related problems of agriculture and national nutrition are evident. The soil which is the medium for crop growth pulsates with life. Plants are the active agents ever ministering to the needs of human beings and animals. In fashioning their own structures from the materials absorbed from the soil, plants are continually giving birth to organic substances of diverse nature which are necessary for human life. In this process, environmental conditions and particularly the nature of nutrition available to the plant are capable of influencing the metabolic processes in the plant leading to changes in its composition and quality. The seed from a properly manured or correctly fed crop possesses more vitality and can therefore, extract from the soil more food material and utilise it ; likewise a properly fed plant provides more and better nutrition to animals and human beings. Not manuring or wrong or unbalanced manuring and plant malnutrition can lead to two things. Firstly, the inherent cropping power of seed will be reduced so that our future crops will get worse and worse ; secondly, we shall be producing food for our people lacking in nutritive value and this means a deleterious effect on the present and future generations. That is the significance of the newer knowledge.

National Nutrition and Crop Production.

The nutrition expert has to revise his diet standards in the light of knowledge on the effect of manurial and fertiliser treatment on crop composition. He will continue to make up diet deficiencies by suggesting ways and means of supplementing diets.

He has to do something more and that is to say what food has to be grown and in what quantity. It is the business of the agricultural

scientist to produce food crops in sufficient quantity and with the highest possible nutritive and health-giving properties to the acre. How is the scientific agriculturist situated in this respect ?

Breeding crops for high yield and high protein.

A direct and ready means that suggests itself is to attain the object just mentioned by plant breeding. Agricultural scientists have been able to breed crops for high yields with acknowledged success. Is it possible to combine high yield with high protein ? The writer's own investigations on the relationship between yield and protein content of wheat and rice indicate negative correlation between yield and nitrogen content of pure strains of these crops. Here again the writer's observations are supported by those of others.

Willcox (Sugar Reference Book and Directory 1938) and Jose Carreras (G. Agronomia *3* : 3, 1938) have shown that in sugarcane and sugar beet high yield and low nitrogen content go together. Ivonov (Bull, Appl. Bot. Leningrad Ser. A.-*15* : 43, 1935) holds that combination of yield and high protein by selection and breeding is more difficult with cereals than with leguminous crops like peas and lentils, but that with gram the difficulty will be as great as with cereals. In Canada Neathy and McCalla (Canad, Jour Res. *16* : 1, 1938) have shown that high yielding varieties of wheat and barley have a marked tendency to be constitutionally low in their protein in content. These workers consider that while varieties characterised by moderately high yield and high protein content are known, it is doubtful whether in plant breeding the maximum possible yield can be combined with maximum possible protein. In the experience of the writer, the high protein content of a variety of wheat bred in one locality has fallen when that variety is grown in another. Isenbeck (Forschungsdenst *10* : 44, 1938), reviewed the question of combined high yield and protein quality in wheat and stated that the combination had yet to be obtained.

Manuring for high yield and high protein.

It is well known that a variety bred for high yield can respond to manurial and fertiliser treatment and gve still higher yields. Does manuring help in combining high yield and high protein ? Does a large crop necessarily mean the best from the food point of view ? Should a variety be bred for its high protein content and then endeavour made to increase crop yield by appropriate manuring or should the protein content of a high yielding variety be raised by appropriate manuring ? These are questions of the highest practical value but we have not the data and the knowledge to answer. We have so far concentrated our attention on quantity and we have not studied the question of quality.

Here again Viswa Nath (Ann. Rept., 1933-34) has drawn attention to the influence of manures and fertilisers on the protein make up of the herbage and grain. According to him the total extractable portion and the proportions of different classes of proteins in the total protein varied with the nature of manuring. He has also found then and again in recent experiments (Sci. Rept., I. A. R. I., 1937-38). Variations in the

digestibility, biological value and the nett protein value of wheat raised with different manures at Pusa. In the light of these experiments Viswa Nath stated that the metabolism of a plant varies with the conditions and levels of nutrition and that the nitrogen content of a crop is *not necessarily protein nitrogen.*

Experience elsewhere corroborates Viswa Nath's observations. Schmalfuss (Phytopath. *Z. 5* : 207, 1932) investigating in the protein metabolism of plants, has observed that high nitrogen content in plants resulting from excess of nitrogen supply is due to an increased proportion of soluble nitrogen rather than protein nitrogen. Rudolf Berks (Boden K. U. Pflanz. *12* : 129, 1939) examined the mature grains of barley and oats under different levels of fertiliser application. Nitrogen in the grains increased with the increased nitrogen application to the soil but the accumulation was in the form of amides. Walter Baumeister (Boden K. U. Pflanz. *12* : 175, 1939) came to similar conclusions in regard to modifications in the composition of wheat by fertiliser treatment.

The outlook and further research.

The foregoing account of work though brief is of world-wide interest. It gives a new orientation to our conceptions, research and thought, on plant nutrition in its relation to human welfare and activity, and opens up a new field of agricultural research with possibilities of further fruitful discoveries. What was considered absurd a decade ago, has in the few years that have elapsed accumulated sufficient evidence not to permit the prestige and tradition of the mineral theory of plant nutrition to prejudice the outlook. The bewildering extensions in every branch of science have led to the necessary evil of narrow specialisation and to keeping separate advanced studies on soil, plant and animal among different groups of workers with the result that investigators have lost sight of the general and common principles which underlie related phenomena. As one writer in the *British Medical Journal* has said, wisdom has been placed on the periphery, which has been expanding so rapidly that we have almost lost sight of the centre.

The improtance of following up the newer knowledge by the study of plant nutrition and metabolism in relation to quality in general and particularly in relation to animal and human nutrition is the logical conclusion after the brief survey of the work that has been done in recent years. It is of special interest to India, whose soils are notoriously poor and whose bulk of the population subsist on a diet of single variety of grain, and therefore any improvement in the nutritive value of food at its source cannot be too strongly emphasised. This is the purpose and justification for the continuance of the work on the problem of plant nutrition and quality. Even if, as held by some, the evidence on the interrelationship between soil, plant, animal and human beings is not adequate and the nature of plant nutrition and metabolism is considered not to influence quality appreciably, the recognition of the existence of different schools of thought is the greatest stimulus for the study of the phenomena and for the proper appreciation of the problem.

ANNEXURE II.

REPORT OF THE SUB-COMMITTEE APPOINTED BY THE ADVISORY BOARD TO CONSIDER FURTHER SIR JOHN RUSSELL'S RECOMMENDATIONS, NOS. 10 AND 11 AND THE PROPOSALS PUT UP IN CONNECTION WITH THEM IN THE IMPERIAL AGRICULTURAL INSTITUTE'S EXPANSION SCHEME.

The Sub-Committee met in New Delhi on November 11th, 1939. It consisted of :

Dr. W. Burns (in the Chair),
Rao Bahadur B. Viswanath,
Lieut.-Colonel E. Cotter,
Mr. A. M. Livingstone.

Concerning Sir John Russell's recommendation No. 10, it was clear that, at this stage, particularly since no nutrition experiments are contemplated, the proposal does not fall within the limits of this recommendation. Practical methods of making good the deficiencies if the customary of villagers, based on numerous diet surveys, are known and recommended. These consist largely in increasing the intake of non-cereal ingredients of food.

Regarding recommendation 11, the Director, Imperial Agricultural Research Institute stated that he might accept certain problems raised by the Marketing branch, but might refuse others, the criterion being apparently whether the said problems are likely to have a "fundamental" aspect or not. The Director would bring such selected problems into one of his already chosen fields of research, *viz.*, his investigation concerning the effect of manuring on the end products of plant metabolism.

Chemical problems arising out of marketing that have no fundamental aspect will not be accepted. These generally require a short term intensive analytical investigation of some specific point of immediate practical importance and, if they had to be tackled, would require extra temporary staff. In the view of the Director of the Imperial Agricultural Research Institute this type of work is more suitable for a Test House or Analytical Laboratory than a Research Institute. He would, however, willingly co-operate and assist so far as possible in small problems of this kind which did not interfere with the general work of the Institute.

The Sub-Committee were unable to relate the Organic Chemist and his staff either solely or directly with work connected with recommendations 10 and 11 and saw no alternative but to treat these proposals for additional staff for the Imperial Agricultural Research Institute as an integral part of a general expansion scheme without any attempt being made by the Imperial Council of Agricultural Research to control the programme. Such staff would then be used by the Director, Imperial Agricultural Research Institute on an investigation regarding the effects of manuring of plant metabolism or any other subject of research.

The question of the appointment of the Organic Chemist and his staff may, therefore, be referred to the Advisory Board for decision.

APPENDIX LXXVIII.

Note on Subject No. 31 (e) :—Proposal for the further retention of the Locust Research Entomologist and his compiling staff for a further period of five months from 1st January 1940. (Rs. 8,027.)

At its meeting in May 1939, the Advisory Board recommended a grant o Rs. 15,500 for retaining the Locust Research Entomologist and a small compiling staff from the 1st April, 1939 upto the 31st December, 1939 for the writing up of a monograph on the Locust research work. This has been sanctioned by the Governing Body. Rao Bahadur Ramchandra Rao, the Locust Research Entomologist, has, since February 1939, been continuously engaged on this monograph. In consultation with the Agricultural Commissioner, a tentative time table for this work was sketched out in February. Progress was reviewed by the Agricultural Commissioner and Rao Bahadur Ramchandra Rao in August of this year, and it is now plain that the work cannot be completed within the original period of time proposed, *i.e.*, before December 31st, 1939. This is largely due to the great difficulties in condensing such an enormous mass of work and observations. The Agricultural Commissioner is convinced that it is not due to any slackness on the part of Rao Bahadur Ramchandra Rao who has given it his most assiduous attention. The work, however, is very largely personal and depends entirely on Rao Bahadur Ramchandra Rao's own writing up, his compiling Assistant being able to provide only the raw material as he requires it. A very careful estimate now indicates that if the work is to be satisfactorily completed, an extension will be required up to the end of May 1940. This date is regarded as the outside limit for an extension and is put down as a safe period which will not be exceeded. The cost of the additional extension, *i.e.*, from 1st January 1940 to 31st May 1940 will be as follows :—

	Rs.
1. *Pay of officer* (Locust Research Entomologist) at Rs. 1,035 p. m. for 5 months	5,175
Leave and pension contributions at Rs. 264-6-0 p. m. for five months	1,322
2. *Pay of Establishment*—	
1 Senior compiling assistant on Rs. 77 p. m. for five months	385
1 Junior compiling assistant on Rs. 62 p. m. for five months	310
1 Draftsman on Rs. 53 p. m. for five months	265
1 Peon on Rs. 14 p. m. for five months	70
	1,030
3. *Contingencies.*	500
Grand Total ..	8,027

The question of extending the scheme upto 31st May 1940 at a cost to the Council of about Rs. 8,000 is now for consideration of the Board.

APPENDIX LXXIX.

Note on Subject No. 32-I (a) :—Technical Programme of Work relating to the Mysore Sheep Breeding Scheme.

The Advisory Board at their meeting held in November 1937, considered a scheme submitted by the Mysore Government for sheep breeding in that State and recommended it to the Governing Body for approval at a cost to the Council not exceeding Rs. 24,160 spread over a period of ten years. The Governing Body at their meeting held in July 1939 sanctioned the scheme for a period of three years at a cost to the Council not exceeding Rs. 7,200. Subject to the usual research grant of the Council for 1940-41 being voted by the Central Legislature, it is proposed to allot funds for the scheme early next year.

2. The Mysore Government have submitted the attached technical programme of work for approval (Annexure). This programme will be considered by an appropriate committee in the first instance, whose recommendations will be circulated to the Advisory Board in due course.

ANNEXURE.

TECHNICAL PROGRAMME OF WORK RELATING TO THE MYSORE SHEEP BREEDING SCHEME.

I. Selection of the foundation flock, *i.e.*, (1) 100 ewe lambs 5 to 6 months old, (2) 150 unshorn ewes 12 to 14 months old (2 teeth), (3) 50 ewes in lamb, (4) 12 rams two years old. Selection being made on the basis of quantity and quality of the wool—a further selection being made for 6 out of them for efficient service.

II. Study of the relation of feed to quantity and quality of wool, *i.e.*, (*a*) Pasture only, (*b*) Pasture *plus* a concentrate ration of groundnut cake, horsegram and wheat bran, (*c*) Pasture *plus* concentrate *plus* minerals, (*d*) Stall feeding only from silage and hay. A group of 25 lambs to be allotted for each treatment (100 lambs).

III. Relation of age to wool production. (This will have to be recorded year after year).

IV. Investigation of the effect of lamb-shearing on subsequent production and quality. 1st shearing in the third month after birth as against 1st shearing in the 12th month. 25 lambs each to be selected from the progeny of I (2), 50 lambs from I (3) above.

V. Study of the best lambing season—*i.e.*, (*a*) Allowing the ram with the flock all through the year, (*b*) Allowing the ram only at particular seasons of favourable pasture. 25 ewes in each group. (50 ewes).

VI. Study of the effect of one lamb a year against two lambs a year on the constitution, longevity and wool production, etc., of the mother and the progeny. 25 ewes for each treatment. (50 ewes).

VII. Effect of castration on wool production and mutton weight. 10 ram lambs for each treatment. (To be taken up after the 1st drop).

Dipping in Patient Sheep Dips.

VIII. The effect on wool production and quality of dipping. 25 ewes to be dipped and 25 not to be dipped. (50 ewes).

B. LAKSHMIPATHY,
Live Stock Expert in charge.

APPENDIX LXXX.

Note on Subject No. 32-I (b) :—Technical Programme of Work relating to the Scheme for Sheep Breeding Research in Kashmir.

The Advisory Board at their meeting held in November 1938 considered a scheme for sheep breeding research in Kashmir and recommended it to the Governing Body for approval, at a cost to the Council not exceeding Rs. 23,120, spread over a period of six years. The Governing Body at their meeting held in July 1939 sanctioned the scheme for a period of three years at a cost to the Council of Rs. 11,700. Subject to the annual research grant of the Council for 1940-41 being voted by the Central Legislature, it is proposed to allot funds for this scheme early next year.

2. The Kashmir Government have submitted the attached technical programme of work for approval (Annexure). The programme will be consideed in the fist instance by an appropriate committee, whose recommendations will be circulated to the Advisory Board in due course.

ANNEXURE.

Kashmir Sheep Breeding Scheme.

Detailed Technical Programme of Work.

The following is the programme of work that will be taken up at the Government Sheep Breeding and Research Farm, at Banihal (Kashmir) from 1940 onwards.

1. Four selected flocks of hundred indigenous sheep each will be maintained at the Farm. They will have the following characteristics :—

(*a*) White wool.

(*b*) Uniform wool of good quality.

(*c*) The ages below three years.

The flocks will be representatives of the different types of sheep found in the State.

These flocks will be kept separate from all other stock and will graze in a big forest which has been exclusively reserved for them. This forest is situated on the slopes of Pir Panjal mountains where very rich and abundant grazing is found in summer. In winter the flocks will be stall-fed on a stored grass and will be stationary at the Banihal Farm.

These four flocks of local ewes will be served in November-December by the following four breeds of rams : (*a*) Merino, (*b*) Cheviot, (*c*) Border Lei-cester, and (*d*) Wensley-dale.

Three rams of each breed will be put to hundred selected ewes. The service will begin from about the 15th of November and will continue up to the 16th of December—one month—after which the rams will be taken away from the ewes and separately maintained.

The lambing will begin from the 15th April onwards when the climatic conditions improve and the spring grasses appear.

The rams will be maintained in the Banihal Farm. The entire stock will be given a dip once a year couple of weeks after the spring shearing. As a preventive against fluke one c.c. of carbon tetra chloride in capsules will be given in October. Efforts will also be made to keep the anti-anthrax vaccine in stock in case of need.

For the first two years Merino, Cheviot, Border Lei-cester, and Wensley-dale rams will be used for service. On the result of these cross breeding experiments those two breeds which yield the best results will be selected out of the four breeds for further cross breeding and the other two breeds will be discarded. A fresh consignment of the selected two breeds will be imported and after two years of service the one of the two breeds which gives better results will be selected. Again a fresh consignment of the selected breed of rams will be ordered and efforts will be made to fix the selected breed.

In cross breeding experiments special attention will be paid to—

(*a*) Improvement in the quality of wool.

(*b*) Increase in the weight of fleece.

(*c*) Growth of a suitable staple length of wool.

(*d*) Increase in the bulk of sheep.

During the period of experiments the stock will be kept isolated from the rest of farm animals and also from the local stock. The experimental animals will be under close observation for detection of any parasitic (internal or external) diseases.

APPENDIX LXXXI.

Note on Item No. 32-I (c) :—Technical Programme of Work relating to the Wool Analysis Scheme at the Bombay University.

The Advisory Board at their meeting held in November 1937 considered a scheme submitted by the Bombay University for the analysis of wool and recommended it to the Governing Body for approval at a cost to the Council not exceeding Rs. 16,020, spread over a period of three years. The Governing Body at their meeting held in July 1939 sanctioned the scheme at a cost to the Council not exceeding Rs. 15,300. Subject to the annual research grant for the Council for 1940-41 being voted by the Central Legislature for 1940-41, it is proposed to allot funds for this scheme early next year.

2. The Bombay University has submitted the attached detailed technical programme of work for approval (Annexure). The programme will be considered in the first instance by an appropriate committee whose recommendations will be circulated to the Advisory Board in due course.

ANNEXURE.

DEPARTMENT OF CHEMICAL TECHNOLOGY, UNIVERSITY OF BOMBAY.

PHYSICAL ANALYSIS OF WOOL.

Technical Programme.

It is proposed to carry out an examination of the various physical characteristics of wool fibres obtained from samples of wool collected from various parts of India in order to assess the quality of wool so far as these characteristics are concerned. Arrangement for the expert sampling of whole fleeces and forwarding the samples to the Bombay University will be made by the animal husbandry section of the Imperial Council of Agricultural Research.

The physical characteristics of the wool fibres which would be examined are :—

(1) Length, (2) Diameter, (3) Crimp, (4) Kemp and Hairy fibres, and (5) Density (if the necessary data regarding the areas of sheep-skin from which the fibres are taken are available).

An outline of the methods for carrying out these examinations is as follows :—

Procedure.

Preparation of the sample.—The original sample is picked out into whole staples and out of these, a smaller sample of approximately 10 gms. is made. This is then subjected to scouring in two changes of benzol and three changes of a 0.25 per cent. solution of potash olive soap at 50°C. After a thorough wash in distilled water, the sample is allowed to dry at room temperature for 48 hours.

The dried sample is next carefully combed by hand, so that individual fibres separate out from the staples, and a clean specimen is obtained. The fibres are then evenly mixed and made into a bunch by a thread tied in the middle. Draws are made from this bunch at random, as required for length, diameter and kemp determinations.

Length measurement.—The fibre is held at the two ends by means of two sharply pointed forceps, and stretched alongside a steel rule graduated in millimeters, on a board mounted with black velvet. About 200 measurements suffice to give an average which varies but little with increasing number of measurements.

Diameter measurement.—About 500 fibres are drawn from the sample and spread out on a piece of stout paper and covered with a sectional paper ruled in millimeters. The papers together with the fibres are then cut across, in pieces of 2 mm. lengths, on a sheet of black paper. The paper strips are picked out and fibre pieces collected together and put in a small stoppered bottle containing about 5 cc. of thickened cedar oil. The bottle is shaken up a number of times and allowed to stand for a few hours. Three drops of this suspension are taken on a microscopic slide and covered with a slip. The fibres are then ready for the measurement of diameter microscopically. At least two slides are made for each sample.

Kemp and Hairy fibres.—The presence of kemp and hairy fibres is detected by their dead white appearance, in contrast to wool fibres which are more or less semitransparent. Kemp fibres are as a rule not more than 5 c.m. in length, but they cannot be distinguished from short hairy fibres easily, unless the root and the tip are examined microscopically. When immersed in a liquid having nearly the same refractive index as wool and examined on a black background, wool fibres are invisible, while the medullated ones (kemp and hair) stand out clearly. Benzene is a convenient liquid for such an examination.

Fibres which have been measured for length are weighed and spread over a completely darkened photographic plate resting in a flat developing dish. Pure benzene is poured in the dish and those fibres which appear totally white along the whole length are picked out. When completely dry they are weighed and thus the amount of totally medullated fibres and kemp in the sample is determined.

Determination of crimp.—Crimp is determined by exactly the same method as that described for the measurement of length ; in this case, however, the fibre is not stretched on the velvet board but allowed to rest in its natural condition and the number of waves per unit length is counted.

Measurement of density.—The density, *i.e.*, the average number of fibres per unit area on any part of the sheep-skin, may be determined by a count of fibres in a weighed sample and subsequently by weighing the whole sample taken from a known area of the skin. The data regarding the area from which the sample is taken should be made available from the place of origin.

APPENDIX LXXXII.

Note on Subject No. 33 :—Application from Mr. A. E. Slater, Mission Poultry Farm, Etah, for a grant of Rs. 36,675 spread over a period of five years in connection, with the Improvement of Goats in the United Provinces.

A scheme for the improvement of goats in the United Provinces submitted by Mr. A. E. Slater, Mission Poultry Farm, Etah, was originally sanctioned for a period of five years from June 1931 at a cost to the Council of Rs. 32,000. It was subsequently extended by five years at a cost of Rs. 27,235 and is due to expire on the 5th June 1941. Mr. Slater has now submitted a proposal for the extension of the scheme by another five years from June 1941 (Annexure). The cost of the proposed extension is estimated Rs. 44,100 and the Council has been asked to contribute the sum of Rs. 36,675 (Rs. 1,000 non-recurring and Rs, 35,675 recurring). The scheme has the approval of the Provincial Agricultural Research Council and has been recommended by the Provincial Government.

2. A sum of Rs. 2,350 has been included in the estimate of costs towards improving the existing system of milk recording. The Vice-Chairman, Imperial Council of Agricultural Research, has already sanctioned, under Bye-law 7 of the Bye-laws of the Council, a sum of Rs. 1,200 for this purpose. Excluding the sum of Rs. 2,350 referred to above, the total liability of the Council would be Rs. 34,325 only.

3. The scheme will, in the first instance, be examined by an appropriate committee whose report will be submitted to the Advisory Board in due course.

ANNEXURE.

APPLICATION FROM MR. A. E. SLATER, MISSION POULTRY FARM, ETAH, UNITED PROVINCE, FOR A GRANT OF RS. 36,675 SPREAD OVER A PERIOD OF FIVE YEARS FOR THE CONTINUANCE OF BREEDING EXPERIMENTS IN CONNEXION WITH THE IMPROVEMENT OF GOATS IN THE UNITED PROVINCES.

Extension for period of five years of the scheme for breeding experiments in connexion with the improvement of goats in the United Provinces.

INTRODUCTION.

THE scheme was commenced in June, 1931 for a period of five years and was revised in 1936 for a further period of five years. The term therefore expires in May, 1941.

The following are the lines of research :

(a) Selective breeding of the best Jumna Paris by means of recorded milk yields and progeny tests.

(b) Selection breeding of the best Bar-Baris means of recorded milk yields and progeny tests.

(c) Determination of the factors of milk production through transmission of the sire.

The period has been too short to determine whether the same law in regard to this matter, which holds true of cows, is true of goats also. This is a most important line of research and one which has not as yet been undertaken in any country.

(d) Standardizing the process of manufacture of "Sweet Cottage Cheese" from goats' milk.

(e) Annual testing of the herd by Muktesar for Brucella infection to make sure that the herd is free from infection of contagious abortion.

(f) The rearing of pedigreed male kids to 18 months of age and distributing these in the villages at Rs. 2 each for crossing on *desi* goats and thus improving the milking qualities of the graded stock. We are strongly of the opinion that the results and benefits of research work should be made available as speedily as possible to villagers. Research and distribution of improved stock in the villages should proceed hand in hand.

In this connexion we would point out that three goat shows were held at each of the five stud buck stations during the last three years. Altogether 3,260 goats were exhibited by 1,808 villagers, and cash prizes amounting to Rs. 1,653 were awarded. These shows were financed by the Local Government under Rural Development Scheme. Altogether 1,274 goats belonging to the villagers were bred by the pure bred bucks at the five stations during the last three years.

(g) Testing milk for percentage of "butter fat" of the first lactation.

(h) Weighing of kids twice a month in order to find the rate of growth in various months.

In order to improve the existing system of recording, the Imperial Council of Agricultural Research has proposed to introduce the following measures :

(a) Weaning of a limited number of kids at birth.

(b) Milking completely every day and recording the milk yield daily.

This experiment to be carried out on a group of selected farm bred stock in both the breeds.

(c) extension of regular fat testing to all lactations instead of confining it to the first as is done at present.

This will require an additional recurring grant of Rs. 2,350 spread over a period of five years as detailed below :

		Rs.	
One man at Rs. 20 per month	.. ..	1,200	for five years.
One man at Rs. 15 per month	.. ..	900	do.
Chemicals for testing milk at Rs. 50 per year	..	250	do.
		2,350	

WORK DONE SO FAR AND RESULTS ACHIEVED.

Brief resume of work done.

1. Purifying the blood lines and fixing the type and colour of Jumna Paris and Bar-Baris.

2. The total milk yield during the lactation has increased from 465 lb. 11 oz. to 545 lb. 8 oz. in the Jumna Pari breed and from 330 lb. 15 oz. to 480 lb. 7 oz. in the Bar-Bari breed during the last seven years.

3. The average milk yield of the herd per day has increased from 1 lb. 10 oz. to 2 lb. 9 oz. in the Jumna Pari breed and 1 lb. 5 oz. to 2 lb. 4 oz. in the Bar-Bari breed.

4. The average yield at the peak per day has increased from 3 lb. 1 oz. to 4 lb. 8 oz. in the Jumna Pari breed and 3 lb. 3 oz. to 3 lb. 13 oz. in the Bar-Bari breed.

5. The average milk yield per day during the kidding interval has increased from 1 lb. 3 oz. to 1 lb. 11 oz. in the Jumna Pari breed and from 15 oz. to 1 lb. 9 oz. in the Bar-Bari breed.

6. The average kidding interval has decreased from 389 days to 327 in the Jumna Pari breed and from 360 days to 303 days in the Bar-Bari breed.

7. The average milk yield of the herd from year to year has increased from 1 lb. 9 oz. in 1932 to 2 lb. 2 oz. in 1938.

8. Improvement in milk yield of daughters over their dams.

	Total no of. goats.	Average milk yield during lactation. lb. oz.	Average milk yield at the peak per day. lb. oz.	Average milk yield per day during lactation. lb. oz.	No. of days In milk.	No. of days Dry.	Average milk yield per day during interval lb. oz.
Mother	152	341 10	3 4	1 10	213	138	1 0
Daughters	152	403 0	3 12	2 3	184	110	1 6

9. Improvement in milk yield of grand-daughters over their dams and grandmothers.

	Total *no. of* goats.	Average *milk yield* during lactation. lb. oz.	Average *yield at* the peak per day lb. oz.	Average *milk yield* per day during lactation. lb. oz.	*No. of days.* In milk.	*No. of days.* Dry.	Average *milk yield* per day during kidding interval. lb. oz.
Mothers	46	285 15	3 6	1 8	193	155	0 13
Daughters	45	333 11	3 4	1 14	180	143	1 1
Grand daughters ..	52	403 4	3 9	2 4	181	110	1 6

10. Cost of production of milk per lb. is 7.2 pies.

11. Services of bucks on village goats: So far 546 goats from villages have been bred to the farm bucks.

12. Altogether 238 goats (209 adults and 29 kids) have been supplied to 11 different provinces during the last eight years, out of which 20 were Bar-Baris and rest all Jumna Paris.

13. The process of manufacture of "Sweet Cottage Cheese" has been standardized and altogether 128.6 lb. of cheese was made during the last four years in the winter months.

14. *Brucella infection.*—Six tests of the adult herd have been made by Muktesar, through the Veterinary Investigation Officer, United Provinces. The result is as follows :

First test.—Four positive reactors out of 80 goats tested.

Second test.—Two positive reactors out of 51 goats tested.

Third test.—Two positive reactors out of 151 goat tested.

Fourth test.—All negative out of 153 goats tested.

Fifth test.—One positive reactor out of 166 goats tested.

Sixth test.—Two positive reactors out of 155 goats tested.

15. Out of 337 Jumna Pari goats 129 (38.28 per cent.) kidded during the month of November and out of 288 goats 154 (53.5 per cent.) were bred in the months of June and July. That shows that kidding season of Jumna Pari goats is November and breeding season June and July.

16. Out of 274 Bar-Bari goats 85 (3.12 per cent.) kidded during the month of November and out of 238 goats 60 (25.2 per cent.) were bred in the month of June.

17. There is a good deal of demand for the Jumna Pari and Bar-Bari male kids which are being reared on the farm for distribution in the villages. Altogether 40 male kids have been supplied during the last two years, and orders for 97 male kids are pending.

18. Determining the percentage of butter fat. The average percentage of butter fat for goats' milk is 5.1.

19. Investigation of internal and external parasites and their remedies.

20. Investigation of *common diseases* of goats and their remedies in co-operation with the Civil Veterinary Department and Muktesar.

21. Feeding and determination of a suitable grain ration, and fodder.

CONCLUSION.

In conclusion we would point out that the goat is an economic producer of milk. The cost of production of milk per lb. for goats compares very favourably with that of cows or buffaloes. Further that goats' milk for the poor labouring classes has no equal, because the capital expenditure on goats, and their cost of maintenance in the village is much less than that required for either cows or buffaloes.

For all these reasons it would seem as if this uncompleted experiment in improving the indigenous breeds we are working with should be continued, and further investigation is essential as clearly the whole matter is one of all-India importance.

Further we would point out that large number of Jumna Pari goats have been exported to Java and elsewhere in recent years and that this export is depleting at a rapid rate the stock of the best Jumna Paris in

the west of the Province. This would point out to the advisability of continuing the work at Etah and of conserving this valuable breed.

Therefore we would ask the Imperial Council of Agricultural Research to make us a total grant of Rs. 36,675 for a period of five years.

	Recurring.	Non-recurring.	Total.
	Rs.	Rs.	Rs.
Gross Total	40,750	1,000	41,750
Additional grant for the new proposals	2,350	..	2,350
Deduct:			
(*a*) Local Government's contribution	3,000	..	3,000
(*b*) Approximate receipts	4,425	..	4,425
	7,425	..	7,425
Net cost to the Imperial Council of Agricultural Research.	35,675	1,000	36,675

Recurring expenditure from June, 1941 to May, 1946—

Serial No.	Items.	11th year.	12th year.	13th year.	14th year.	15th year.	Total. year.	Remarks.
		Rs.	Rs.	Rs.	Rs.	Rs.	Rs.	
1	Grain	2,000	2,000	2,000	2,000	2,000	10,000	100 adults at Rs. 13 per year and 100 young at Rs. 7 per year.
2	*Menials*:							
	(*i*) 4 adults at Rs. 15 each per mensem	720	720	720	720	720	5,460	
	(*ii*) 1 chaukidar at Rs. 15 per mensem	180	180	180	180	180		
	(*iii*) 2 boys at Rs. 8 per mensem	192	192	192	192	192		
3	Assistant's salary—Rs. 150—10—200	1,800	1,920	2,040	2,160	2,280	10,200	
4	Clerk Rs. 50—2—60	600	624	648	672	696	3,240	
5	Fodder	420	420	420	420	420	2,100	at Rs. 35 per month.
6	Cultivation:							
	(*i*) Labour (including muster roll.)	360	360	360	330	360	1,800	Rs. 30 per month.
	(*ii*) Irrigation	100	100	100	100	100	500	Rs. 10 per month.
7	Medicines	125	125	125	125	125	625	
8	Veterinary doctor's allowance ..	120	120	120	120	120	600	
9	Office	125	125	125	125	125	625	
10	Miscellaneous dairy and farm contingencies	520	520	520	520	520	2,600	
11	Raising 20 male kids for distribution at Rs. 30 each at 1½ years of age	600	600	600	600	600	3,000	
	Grand Total ..	7,862	8,006	8,150	8,294	8,438	40,750	

Summary of approximate receipts for the period of five years—

Serial No.	Items.	11th year.	12th year.	13th year.	14th year.	15th year.	Total.	Remarks.
1	*Sale of milk and its products ..	480	480	480	480	480	2,400	
2	Sale of adult stock	250	250	250	250	250	1,250	
3	Sale of young stock	120	120	120	120	120	600	
	Services of bucks on village goats	25	25	25	25	25	125	
	Sale of hides	10	10	10	10	10	50	
	Total Receipts ..	885	885	885	885	885	4,425	

1. Renewing fencing :

	Non-Recurring.
	Rs.
Woven wire sheep fencing 4 rolls at Rs. 60 each extra strong quality ..	240
Barbed wire 4 rolls at Rs. 15 each	60
Hundred " Neem " Karis 8 ft. long at Re. 1 each	100
Labour for fixing the fencing	30
(Miscellaneous) other material required for fencing	20
	450
Two renewing equipment of main goat shed for milking herd	300
Three construction of " Sheep Dip "	250
Total ..	

Acquisition of land for grazing.

Government is requested to acquire at least 25 acres of land for this purpose. This is badly needed.

* This figure is worked out according to the actual receipts of the last three years. The decrease in receipts is due to the fact that *all* the male kids are now being reared on the farm for distribution in the villages.

APPENDIX LXXXIII.

Note on Subject No. 34 (a) :—Application from the Bihar Government for a grant of Rs. 25,430 spread over a period of five years for a scheme for sheep breeding in Bihar.

At their meeting held in November 1938, the Advisory Board considered a scheme of sheep-breeding in Bihar and recommended that it should be returned to the Provincial Government for revision in certain respects. The Provincial Government have now revised the scheme accordingly and have submitted the attached scheme (Annexure) for consideration by the Council. The scheme is estimated to cost Rs. 27,130 (Rs. 1,700 non-recurring and Rs. 25,430 recurring) over a period of five years. The Provincial Government have agreed to meet the non-recurring charges and provide lands, buildings, etc., and expect the Council to meet the whole of recurring cost, *viz.*, Rs. 25,430.

2. In connection with the consideration of the subject ' Cross breeding of the Country sheep with a long woolled sheep for producing better wool for carpets ', the Advisory Board at a meeting held in May 1939 recommended that in connection with formulation of sheep breeding schemes, detailed investigations should be undertaken in regard to the grading of indigenous stock, diseases of stock and nutritional problems and that comprehensive information regarding diseases and nutritional problems should be available.

The scheme will be examined in the first instance by an appropriate committee whose report will be submitted to the Advisory Board in due course.

ANNEXURE.

Copy of letter No. 4404|I-40|39, dated the 31st March 1939, from the Director of Agriculture, Bihar, to the Secretary to the Government of Bihar, Education, Development and Employment Dement, Patna.

I have the honour to refer to Government memo. No. 279-D., of the 9th February, 1939, regarding the sheep breeding scheme for Bihar that was submitted to the Imperial Council of Agricultural Research with Government letter No. 55-D.R. of the 2nd October, 1938. This scheme was returned by the Council with its letter No. F-17 (11)—38-A.H. of the 30th January, 1939 and in this letter I was asked to examine the scheme in the light of the discussion that took place in connection with it at the meeting of the Advisory Board held in November, 1938.

2. The scheme was criticized on the following grounds :—

(i) It was considered that a foundation stock of 100 ewes was not large enough and that the number be increased.

(ii) It was felt that a total recurring and non-recurring expenditure of Rs. 27,000 spread over five years on a flock of 100 ewes was excessive.

(iii) The programme of work was criticized as being rather vague, and a request was made that more details should be incorporated in the scheme.

(iv) The advisability of using Merino rams for cross-breeding was questioned and it was recommended that Bikaner rams should be used.

3. I have now examined the scheme and a draft is submitted herewith for submission to the Imperial Council of Agricultural Research with a view to their providing funds for the purpose.

4. As regards the various criticisms raised against the previous scheme, they have been dealt with seriatim as follows :—

(i) The foundation stock proposed in this scheme consists of 200 ewes, *i.e.*, the stock is doubled.

(ii) The total cost of the scheme spread over five years is Rs. 27,130 as compared with Rs. 26,640 in the previous proposals. The cost is practically the same but the flock is doubled.

(iii) A more detailed programme than the previous one is now submitted.

(iv) The recommendation that Bikaner rams be used in preference to Merino rams is accepted.

5. As the Imperial Council of Agricultural Research is being requested to meet practically the whole cost of the scheme, the Council demands that all the receipts from sales accruing to the scheme must be credited to the Council [*vide* page 2 of the extracts attached to letter No. F.-17 (11)—38-A.H. of the 30th January, 1939, to your address].

6. The scheme as now amended, if it meets with the approval of Government, may now be forwarded to the Imperial Council of Agricultural Research.

A SCHEME FOR SHEEP BREEDING IN BIHAR.

Sheep breeding in Bihar is mainly confined to the triangle extending from the provincial boundary on the west and bounded on the north by the River Ganges and on the south-east by the Chota Nagpur Plateau. Carpet-making and blanket-weaving are also confined to the same area. The wool produced by the local sheep is coarse in quality, but according to the Government of India publication " Notes on Wool in India " issued in 1919, Silver and Mehta go so far as to state that as far as yield is concerned Bihar sheep are perhaps the best indigenous sheep in the country. Still, in spite of the potential value of this type of sheep, not only to Bihar, but to India as a whole, no systematic effort at an all-round improvement has been attempted.

In 1933 a sub-committee of the Imperial Council of Agricultural Research appointed to examine certain sheep and goat-breeding schemes recommended that for the development of a wool industry systematic breeding work on the indigenous breeds should be taken up on an extensive scale. But although the Bihar sheep has been so well reported on by Silver and Mehta, Bihar so far has not been included in this comprehensive scheme of sheep breeding. Accordingly a scheme as detailed below to form part of the general scheme for the improvement of sheep breeding

throughout India has been prepared and is now submitted for the approval of the Imperial Council of Agricultural Research.

OBJECTS OF THE SCHEME.

1. The main objects of the scheme are two-fold :—

(i) To build up by careful breeding and selection a superior flock of indigenous sheep with a view to producing animals of undoubted stamina yielding more and better wool than their prototypes and also with a view to producing animals with a better carcase.

(ii) To study the effect of Cross breeding of indigenous sheep with Bikaner rams with the same immediate purpose in view.

2. To maintain a supply of young animals for distribution at concession rates to breeders in Bihar and elsewhere in India.

3. To study the best methods and times of breeding, docking, shearing and castration of sheep.

4. To provide facilities for the study by the Disease Investigation Officer of various questions in connection with the proper care of sheep in India.

5. To demonstrate the grading, packing and marketing of wool.

SITE.

The work will be carried on the Gaya Farm which is right in the centre of the sheep-breeding tract, and where the conditions are absolutely typical of what prevails in the sheep-breeding area. This farm was at one time the headquarters farm of the Patna Range but with the transfer of the heaquarters to Patna in the year 1932 the farm was reduced to the status of a small district farm. Practically the whole farm will be used for the work and ample buildings are available. Ample land can be obtained outside for grazing if need be.

STOCKING OF THE FARMS.

Local ewes to the number of 200, and eight rams, will be purchased throughout the tract to form the foundation stock with which the work is to be started. Four Bikaner rams will be purchased with the collaboration of the Live-stock Expert to the Government of India as soon as the foundation stock has been collected together.

ESTIMATE OF EXPENDITURE.

The scheme according to details appended involves a total expenditure of Rs. 27,130, *i.e.*, Rs. 1,700 non-recurring and Rs. 25,430 recurring, spread over a period of five years. The Government of Bihar have agreed to meet the non-recurring expenditure, and to place the necessary land and buildings at tha disposal of the Imperial Council of Agricultural Research.

As the Council is being requested to meet all the recurring expenditure, the Bihar Government is prepared to credit to the Council all receipts accruing to the scheme.

ESTIMATE OF COST.

Non-recurring.

	Rs.
200 local ewes at Rs. 6 each	1,200
8 local rams at Rs. 12-8-0 each	100
4 Bikaner rams at Rs. 100 each including rail freight and incidental expenditure.	400
Total ..	1,700

Recurring expenditure.

——	First year.	Second year.	Third year.	Fourth year.	Fifth year.	Total.
1	2	3	4	5	6	7
	Rs.	Rs.	Rs.	Rs.	Rs.	Rs.
*One class II Overseer at Rs. 85—4—145 (average Rs. 122-7-0).	1,470	1,470	1,470	1,470	1,470	7,350
One Sardar at Rs. 20—1—30 ..	240	252	264	276	288	1,320
Four shepherds at Rs. 12 ..	576	576	576	576	576	2,880
Two night watchmen at Rs. 10 ..	240	240	240	240	240	1,200
One peon at Rs. 8	96	96	96	96	96	480
Feeding charges	1,700	2,000	2,000	2,000	2,000	9,700
Miscellaneous, *e.g.*, oil, medicines, stationery, etc.	300	300	300	300	300	1,500
Travelling allowance	200	200	200	200	200	1,000
Total ..	4,882	5,134	5,146	5,158	5,170	25,430

*This overseer will be a veterinary graduate.

APPENDIX LXXXIV.

Note on Subject No. 34 (b) :—Application from the Government of the Punjab for a grant of Rs. 17,100 spread over a period of five years for a scheme to Supplement Livestock Investigation at the Government Cattle Farm, Hissar.

At their meeting held in November 1938 the Advisory Board considered an application from the Government of the Punjab for a grant of Rs. 40,240, spread over a period of five years, for a scheme to supplement livestock investigation work at the Government Cattle Farm, Hissar. The Board also considered a note prepared by Mr. F. Ware (the then Animal Husbandry Expert) in consultation with the Director of Veterinary Services, Punjab, suggesting certain modifications in the Scheme. The Board approved of the modifications suggested and the scheme was returned to the Government of the Punjab for revision. The Punjab Government have accepted the modifications suggested and have submitted the attached revised scheme (Enclosure). The revised scheme, however, contains the following new items of expenditure which were not included in the original scheme :—

Item.	Expenditure (for 5 years). Rs.
1. One peon	840
2. House Rent allowance for Geneticist and Assistant Veterinary Surgeon.	1,800
3. House Rent allowance for four attendants ..	240
Total ..	2,880

The provincial Government will meet half of the total expenditure involved, *viz.*, Rs. 17,100.

2. The scheme will, in the first instance, be considered by an appropriate Committee and their recommendations will be submitted for the consideration of the Advisory Board in due course.

ENCLOSURE.

A SCHEME TO SUPPLEMENT LIVE STOCK INVESTIGATION AT THE GOVERNMENT CATTLE FARM, HISSAR.

Introduction.—The Government Cattle Farm, Hissar, situated near the town of Hissar in the western Punjab, forms part of the famous Hariana Cattle tract, the soil of which is a rich loam on which grows, without irrigation, the highly nutritious, indigenous grasses, such as Anjan (Tennisetum Chenchorides), Palwa (Andropogon Pertusus) and Dub (Cynodon Dactylon) so greatly valued by cattle breeders throughout India.

2. The Farm grazing area, known as the Bir, provides such grazing in abundance in normal years and in addition yields excellent quality hay in years of good rainfall. Natural grazing is regarded as one of the most

valuable assets of this live stock farm and so far as possible no encroachments have ever been made on the better portions of this area even for cultivation. Considering the scanty rainfall of the district, an annual average of some 14″, this area of thirty-five thousand odd acres is none too large for the huge head of stock maintained on the farm.

3. This large area, with its natural divisions, lends itself admirably to the general scheme of dividing up the farm stock, by age and sex, one of the essentials of a modern stock farm. The day-to-day arrangements for the grazing of the herd are most carefully controlled, different sections of the Bir being grazed in such rotation as to make the most of the feeding available.

4. The live stock on the farm on the 1st April, 1939, included the following :—

Cows	3,016
Bulls	50
Young Stock	3,566
Castrated Produce	64
Donkeys, including young stock and mules	128
Sheep and Goats	2,786
Horses including young stock and mares	29
Camels	12
Bullocks	485
Total	10,136

5. There is also a small Dairy attached to the Hissar Cattle Farm where minor experiments are carried on. They are, however, limited to the extent to which funds are available and the existing staff is capable of carrying out. The herd for this Dairy are drawn from the stock noted above.

6. It is obvious, therefore, that the Hissar Farm has unrivalled facilities for investigational work on a variety of topics, of all-India interest, for the benefit of live stock breeders, information on which it would not be possible to obtain with the same precision elsewhere in India.

7. It is, therefore, now proposed, that in order to take full advantage of the facilities and material available on this farm, the research and investigational work which is already being done at the farm dairy be not only intensified but extended and that the Imperial Council of Agricultural Research should agree to bear half the additional cost involved.

8. Broadly speaking, the work of the scheme will include the keeping of accurate pedigree breeding records, collecting data regarding live weights of stock of different ages, milk recording, fat testing and investigational work with reference to practical matters of animal stock breeding in health and disease. It is intended that a practical and statistical study of the inheritance in the Hissar breed of milk yield and butter fat content shall be carried out. Carefully controlled observations will also be recorded of the effects of breeding for milk yield on the male progeny as regards their suitability for issue to districts for breeding purposes and as bullocks for ploughing.

9. From such a record based upon carefully controlled experiments it is anticipated that information of very great practical importance will be obtained.

10. The objects of the Scheme are summarized below :—

(a) To ascertain the practicability of introducing progeny tests as a means of assessing the value of stud bulls in India.

(b) To demonstrate the possibilities of segregating out, from an existing Indian breed, the Hissar breed on the Hissar Cattle Farm, definite strains which can be relied upon to breed, true for high milk yield and to determine what effect, if any, this has on the inheritance of work characteristics.

(c) To study the inheritance of purely work characteristics and compare the results obtained with a similar study in the Dairy herd.

(d) To study the effects of weaning calves under approximate village conditions—

(i) to compare the rates of growth and weights of weaned and unweaned calves,

(ii) to compare the production of milk and butter fat of weaned and unweaned cows, and to evolve a correction factor for purposes of estimating the milking capacity of unweaned herds.

(e) To study the comparative growth and developments of calves of milk and working types.

(f) To determine the best and most economical methods of rearing and handling young stock, under approximate village conditions, for (a) early maturity, (b) efficient milk production.

(g) To determine the optimum calving interval and dry period for cows of this breed.

(h) To carry out any minor investigations as may be decided upon in consultation with the Animal Husbandry Expert.

11. In view of the long time that is needed for obtaining results of breeding operations, it will be necessary to work this scheme for a period of at least ten years. In the first instance, however, it is proposed to restrict it to five years and to extend it for another five years, should the circumstances justify so doing.

12. The existing staff employed on the Farm dairy which is located in the Home Farm, consists of—

——	Grade.	No. of posts.
	Rs.	
1. Dairy Supervisor (A Bangalore I. D. D. trained man).	60—3—90	1
2. Dairy Foreman	20—1—30	1
3. Dairy Jamadar	18—½—23	1
4. Dairy attendants	Rs. 12 per mensem. each.	10
5. Dairy attendants	Rs. 13 per mensem each.	10

13. *To carry out the proposed scheme, the following additional staff will be required* :—

	Rs.
(1) One Animal Geneticist in Punjab Veterinary Service, Class II.	200—15—275/15—470/15—560—20—600.
(2) One Veterinary Assistant Surgeon.	80—7—150/7—185—8—225.
(3) One Computer Clerk ..	35—1½—65/2—75.
(4) Four Dairy attendants ..	Rs. 12 per mensem each.
(5) One peon for the Animal Geneticist.	Rs. 14 per mensem.

14. Although trained men in the Science of Animal Genetics are difficult to find in India at the present moment, it is hoped that all the students who were lately undergoing Post-Graduate Course at the Institute of Animal Genetics, Edinburgh, would be returning to India in the course of the year and would thus be available for employment. The Animal Geneticist when employed, will be placed in Punjab Veterinary Service, Class II. If he is allowed more than the minimum of the scale, concurrence of the Imperial Council of Agricultural Research will be obtained.

15. The Superintendent of the Government Cattle Farm, Hissar, is given conveyance allowance of Rs. 80 per mensem for maintaining three horses and each of the two Assistant Superintendents a motor-car allowance of Rs. 75 per mensem. The existing Punjab Veterinary Service, Class II officers are provided with conveyances at Government expense. On the analogy of these officers, the Animal Geneticist and Veterinary Assistant Surgeon will be allowed Rs. 22-8-0 per mensem each on the condition that each maintains either a horse or a carriage and are allowed no other travelling allowance within the Hissar Cattle Farm boundaries.

16. The Animal Geneticist, and the Veterinary Assistant Surgeon working under this scheme will be further allowed fixed house-rent allowance at Rs. 20 and Rs. 10 per mensem, respectively. The four attendants will either be provided with free accommodation at the Home Farm (if available) or will be allowed Re. 1 per mensem each in lieu thereof.

17. The scheme as also the Farm dairy will be placed under the charge of the Animal Geneticist subject to the control and supervision of the Assistant Superintendent (Stock) and Superintendent, Government Cattle Farm, Hissar. He will be assisted by the Veterinary Assistant Surgeon and the existing Dairy Supervisor on the practical side of the work.

18. The work will be started with 220 cows, the present number of standard heifers and other dairy young stock and five herd-bulls which will all be drawn from the stock referred to in paragraph 4. They will be housed in the Home Farm, the existing site of the Dairy, according to the following plan :—

Enclosure No. 13 (Milking Line)	80 cows.
Enclosure No. 11 (Handling and Training Lines)	60 cows.
Enclosure No. 9 (Dry Cows Line)	50 cows.
Enclosure No. 17 (Special Cows Line) ..	30 cows.

Enclosure No. 3 (Reserved for heifers likely to make good Dairy cows—Training Line).

Dairy Calves Enclosure : Reserved for weaned calves.

Enclosure for Bulls : Reserved for Pedigree bulls of Dairy Section.

19. As the Punjab Government will continue to provide, free of charge, the building required for housing the cattle, dairying and investigational purposes, feed for the cattle and dairy appliances at present used at the Dairy, and the existing Dairy staff, all the income derived from the Dairy will continue to be credited to the Punjab Government and the Imperial Council of Agricultural Research shall have no claim thereto.

20. The statement of additional cost involved is attached herewith. Half the cost amounting to Rs. 17,100 will be borne by the Punjab Government and the other half by the Imperial Council of Agricultural Research.

STATEMENT OF EXPENDITURE.

——	First year.	Second year.	Third year.	Fourth year.	Fifth year.
	Rs.	Rs.	Rs.	Rs.	Rs.
(1) One Animal Geneticist at Rs. 200—15—275/15—470/15—500—20—600.	2,400	2,580	2,760	2,940	3,120
(2) One Veterinary Assistant Surgeon at Rs. 80—7—150/7—185—8—225.	960	1,044	1,128	1,212	1,296
(3) One Computer Clerk at Rs. 35—1½—65/2—75.	420	438	456	474	492
(4) Four Dairy Attendants at Rs. 12 per mensem each.	576	576	576	576	576
(5) One peon for Animal Geneticist at Rs. 14 per mensem.	168	168	168	168	168
(6) Contingencies for equipment in connection with the investigational work.	2,000	500	500	500	500
(7) Allowance for conveyance arrangements for Animal Geneticist and Veterinary Assistant Surgeon at Rs. 22-8-0 per mensem each.	540	540	540	540	540
(8) House rent allowance for the Animal Geneticist an Veterinary Assistant Surgeon at Rs. 20 and Rs. 10 per mensem, respectively.	360	360	360	360	360
(9) House rent for four Attendants at Re. 1 per mensem each.	48	48	48	48	48
Total	7,472	6,254	6,536	6,818	7,100

	Rs.
Five years' total cost	34,180 or 34,200 round.
Half to be borne by the Imperial Council of Agricultural Research..	17,100

NOTE.—The cost of the scheme will vary if any of the staff to be employed is allowed more than the minimum of the scale.

APPENDIX LXXXV.

Note on Subject No. 34 (c) :—Application from the Government of the United Provinces for a grant of Rs. 3,65,494 spread over five years, for research into the possibilities of improving the Himalayan Hill Cattle.

The attached scheme (Enclosure) has been submitted by the Government of the United Provinces for the consideration of the Advisory Board. The scheme involves an expenditure of Rs. 4,98,294 (non-recurring Rs. 1,70,714 and recurring Rs. 3,27,580) spread over a period of five years. It will be seen from the statement of expenditure attached that the Government of the United Provinces propose to bear the expenditure of Rs. 1,32,800 on account of buildings, etc. and they have asked the Council to provide the balance of Rs. 3,65,494. Ordinarily, the Provincial Government interested in the scheme is expected to provide land and buildings required for the scheme and also to bear a part of the recurring expenditure. In the event of the scheme being approved, it is for consideration what part of the non-recurring expenditure should be borne by the Provincial Government, over and above providing the lands and buildings.

2. The Scheme will, in the first instance, be considered by the appropriate Committee and their recommendations will be submitted for the consideration of the Advisory Board in due course.

ENCLOSURE.

An application from the United Provinces Government to the Imperial Council of Agricultural Research for a grant of Rs. 4,98,294 (non-recurring Rs. 1,70,714 and recurring Rs. 3,27,580) spread over five years for research into the possibilities of improving the Himalayan Hill Cattle as amended in accordance with resolution No. 2, dated August, 10, 1939.

Introductory.

The Hill cattle of the Himalayan Range are notoriously weak in stamina and poor in milk yield. Their only value appears to lie in their being able to eke out an existence on the spare and poor quality grazing available in the hills under severe climatic conditions. Their utility as draft cattle is very low. In milk yield they compare unfavourably with goats since they require a great deal more feeding and care and produce about the same quantity of milk. No substantial work or research has been done on Himalayan cattle so far. With the rapid growth of population the problem of mountain farming to meet the growing economic needs of our hill men, is assuming much importance. It is urgently necessary therefore to conduct practical research into the problems of improving Hill cattle both for milk and draft purposes.

Hills cattle are either—

(1) a mixed non-descript small sized type of buffalo, or

(2) a cow which is frequently black or red in colour at altitudes above 5,000 feet. Below such altitudes there are definite indications of mixture with cattle brought up from the plains for grazing on the lower slopes of the hills.

Nature of the problems. The problem has three main aspects—

(1) Isolation by selection of pure types suitable for different altitudes in the mountains.

(2) Careful breeding and selection in order to build up local herds suited to the particular local conditions.

(3) A study of the indigenous grasses and fodders and the introduction of promising strains to supplement the natural grazing in the hills with a view to improving the quality of cattle feed.

Proposed method of approach. As little or no work has been done so far on isolation of types of hill cattle, a preliminary survey and selection will be conducted simultaneously. A foundation herd with external characters as nearly uniform as possible will be selected and purchased by an expert officer of the Department deputed for the purpose. Black or red colour, strong bones and hoofs, typical head with wide forehead, eyes well set apart, tight muscles and well shaped quarters and hump will be among the characters to be looked for in the bulls. The same colour and general external features combined with a well formed udder and milk veins and a healthy skin and hair will indicate suitable cows for the foundation herd. The advice of the Imperial Institute of Veterinary Research at Mukteswar will be sought; and their experience is likely to prove invaluable. In-breeding with such a herd will enable the breeder to fix the best type for both draft and milk purposes, as hill cattle are essentially dual purpose animals.

The Imperial Institute at Mukteswar have isolated and improved certain valuable fodder and grazing grasses. These and others will be tried out on experimental plots and the best of them will be isolated with a view to testing their value for green fodder, hay-making and pasture. Similarly wild clovers and lucerne and other legumes will be isolated and tested and experimental pastures on modern lines laid out for yield, manurial and grazing experiments.

The scheme. It is proposed that two cattle breeding farms for cattle research be started in the hills of the United Provinces—

(1) for elevations below 5,000 feet.

(2) for altitudes above 5,000 feet.

For the first farm an area of some 1,800 acres of forest land including some 20 to 30 acres of cultivated land is available. For the second farm above 5,000 feet a similar area is available at a height above sea-level of about 7,000 feet. The lower farm would be stocked with the following cattle :

(a) A foundation herd of 50 selected buffaloes of the *Murrah* type which have been acclimatized to submontane areas and low mountain elevations.

(b) A herd of selected hill cattle suitable for low altitudes, the total number being 50 cows and 3 bulls.

For the upper farm there would be two sections :

(a) A foundation herd of 30 Afghan cows and two Afghan bulls.

(b) A foundation herd of 50 selected hill cows, preferably of black colour, and 3 bulls of the same breed and colour. The Afghan cattle will be kept entirely separate from the selected hill cattle. The object of the Afghan herd would be to study the possibilities of introducing a hardy hill type of milch cattle suitable for isolated dairying conditions but not to be used for cross-breeding. The object of maintaining the black highland hill herd would be to produce high class indigenous cows and prepotent bulls with a view to distribution of the progeny in selected areas under controlled conditions wherein the performance of the distributed bulls would be carefully watched and recorded. The records of milk yield, etc., of the progeny of these bulls would be maintained in the villages in the selected zones. The methods of investigation and research would be similar for both the lower and upper farm.

The scheme of research will take in the first instance a period of five years and will have to be prolonged.

Duration of the scheme.

Recurring expenditure.

Staff. ..	1st year.	2nd year.	3rd year.	4th year.	5th year.	Total for 5 years.
	Rs.	Rs.	Rs.	Rs.	Rs.	Rs.
1. 1 Provincial class II Officer (Incharge of both farms). (Rs. 175—12—295—15—475—25—500).	2,100	2,244	2,388	2,532	2,676	11,940
2. 2 Members S. A. S. Group I, 1 for each Research Farm as Superintendent. (Rs. 150—10—220).	3,600	3,840	4,080	4,320	4,560	20,400
3. 4 Members S. A. S. Group II, 2 for each farm as Assistant Farm Superintendents. (Rs. 80—5—150).	3,840	4,080	4,320	4,560	4,800	21,600
4. 2 Veterinary Assistants (Rs. 80—5—150).	1,920	2,040	2,160	2,280	2,400	10,800
5. 4 Inspectors in S. A. S. (Group III. (Rs. 40—2—60—4—80).	1,920	2,016	2,112	2,208	2,304	10,560
6. 6 herds and dairy Jamadars S. A. S. Group V. (Rs. 60—½—35—1—40).	2,160	2,160	2,322	2,232	2,304	11,088
7. 20 Chaukidars and herdmen at Rs. 12 per mensem each.	2,880	2,880	2,880	2,880	2,880	14,400
8. 2 clerks Rs. 60—3—66—4—90	1,440	1,512	1,584	1,680	1,776	7,992
9. 3 peons at Rs. 15 per mensem each.	540	540	540	540	540	2,700
Total ..	20,400	21,312	22,296	23,232	24,240	1,11,480

Recurring expenditure.

Staff.	1st year.	2nd year.	3rd year.	4th year.	5th year.	Total for 5 years.
	Rs.	Rs.	Rs.	Rs.	Rs.	Rs.
Allowances and Honoraria.						
Travelling allowance	1,500	1,500	1,500	1,500	1,500	7,500
Hill allowance at Rs. 40 for Class II Officer.	480	480	480	480	480	2,400
Hill allowance at Rs. 20 for members S. A. S. Group I and II.	1,920	1,920	1,920	1,920	1,920	9,600
Hill allowance at Rs. 10 for Groups III and V.	1,200	1,200	1,200	1,200	1,200	6,000
Total ..	*5,100*	*5,100*	*5,100*	*5,100*	*5,100*	25,500
Contingencies.						
Upkeep of cattle for 191 heads of dairy cattle and 12 draught bullocks at Rs. 10 per mensem per head.	24,360	24,360	24,360	24,360	24,360	1,21,800
Cultivation of about 60 acres of land for silage making at Rs. 50 per acre.	3,000	3,000	3,000	3,000	3,000	15,000
Compost making 8 men at Rs. 10 per mensem each.	960	960	960	960	960	4,800
12 milk men for 120 milch cattle at Rs. 10 per mensem each.	1,440	1,440	1,440	1,440	1,440	7,200
20 men or carrying milk upto cart road at Rs. 10 per mensem each. (These men will arrange for fodder in their spare time.)	2,400	2,400	2,400	2,400	2,400	12,000
Contingencies for Veterinary Hospital.	1,000	1,000	1,000	1,000	1,000	5,000
Depreciation on live stock to provide for replacement.	3,240	3,240	3,240	3,240	3,240	16,200
Upkeep of roads and buildings ..	1,380	1,380	1,380	1,380	1,380	6,900
Miscellaneous office contingencies	500	300	300	300	300	1,700
Total ..	38,280	38,080	38,080	38,080	38,080	1,90,600
Total recurring	63,780	64,492	65,476	66,412	67,420	3,27,580

Non-recurring.

(a) Lower Farm.	Rs.
50 milch buffaloes and 3 bulls at Rs. 200 each	10,600
50 cows and 3 bulls at Rs. 150 each	7,950
Upper Farm.	
32 Afghan cows and bulls at Rs. 300 each	9,600
53 selected black highland hill cows and bulls at Rs. 80	4,240
2 portable typewriters at Rs. 200 for each of the two farms including repairing charges (original provision of Rs. 1,000 reduced to Rs. 400)	400
	32,790

(b) Acquisition of land (by transfer from forest department). ..		33,750
Buildings (dairy) ..		
Sheds for 180 milch cattle ..		33,750
,, 11 bulls ..		2,750
,, 120 calves ..		2,250
Milk recording room ..		450
Room for dairy equipment ..		2,700
Calving boxes 6 ..		1,800
Isolation wards 6 ..		1,500
Godowns 3 ..		5,000
Implement tin shed ..		1,600
Veterinary Hospital and its equipment ..		3,000
		54,800
	Rs.	Rs.
Buildings (staff)		
2 offices ..		4,000
1 bungalow for Class II Officer ..		5,000
2 quarters for S. A. S. Group I ..		6,000
4 Ditto ditto II ..		10,000
2 Ditto ditto II Veterainry Assistant ..		5,000
4 quarters for S. A. S. Group III ..		6,000
2 clerks' and 3 peons' quarters ..		6,000
6 Dairy Jamadar quarters ..		6,000
20 quarters for chaukidars and herdsmen ..		9,000
		57,000
Water supply ..		8,000
Fencing ..		10,000
Layout of cultivated land of about 60 acres ..		1,500
For general layout of grazing land and making thoroughfares ..		1,500
Equipment.		
200 chains ..	200	
12 milking buckets ..	24	
40 buckets of 1 md. capacity ..	400	
2 herd recorders ..	100	
400 glass bottles ..	200	
2 milk separators ..	500	
2 butter making sets ..	200	
1 pasturizing set ..	1,000	
1 boiler of steam and hot water ..	500	
1 weight balance and other minor requirements ..	1,500	
Miscellaneous equipment ..	500	5,124
		26,124
Total non-recurring ..		1,70,714

Summary.

		Rs.
Total recurring for 5 years	.. ..	3,27,580
Total non-recurring for 5 years	..	1,70,714
Total	..	4,98,294

Allocation of funds.		Rs.	
Cost to be met by the Imperial Council of Agricultural Research.		3,27,580	Recurring for 5 years.
		32,790	Towards live stock and typewriters
		5,124	Towards equipment.
		3,65,494	
Cost to be met by U. P. Government	..	1,32,800	Towards buildings and quarters, etc., (excluding the cost of land to be transferred from the Forest Department and supervision charges by Deputy Director of Agriculture, Catttle - Breeding Circle).
Total	..	4,98,294	

APPENDIX LXXXVI.

Note on Subject No. 34 (e) :—Application from the Pattagar of Palayakottai for a grant of Rs. 99,868 (non-Recurring Rs. 1,540 and Recurring Rs. 98,328) spread over a period of ten years for a scheme for the improvement of the Kangayam breed of cattle.

Attention is invited to the enclosed (Annexure) copy of a letter from the Director of Veterinary Services, Madras, No. 602/IV/39, dated the 30th September 1939 forwarding the scheme mentioned above.

2. In September 1937, the Government of India forwarded to the Government of Madras an application from the Pattagar of Palayakottai for a grant for the maintenance and improvement of the Kangayam breed and suggested that a scheme should be drawn up by the Veterinary Officers in Madras, in collaboration with the Pattagar, and forwarded to the Imperial Council of Agricultural Research for consideration. The subject was subsequently discussed at an informal meeting at which the Animal Husbandry Commissioner with the Government of India, the Livestock Development Officer, Madras, and the Pattagar were present. The scheme now submitted has been drawn up in accordance with the conclusions reached at the meeting.

3. No contribution from the Provincial Government has been proposed. It has been suggested that the entire cost should be borne by the Council except that the animals required under the scheme will be supplied by the Pattagar who will also pay for their feed and upkeep.

4. The subject will, in the first instance, be considered by the appropriate committee and their recommendations will be submitted to the Advisory Board in due course.

ANNEXURE.

COPY OF THE LETTER FROM THE DIRECTOR OF VETERINARY SERVICES, MADRAS, ROC. No. 602-IV/39, DATED THE 30TH SEPTEMBER 1939.

SUBJECT :—*Livestock—Improvement of the Kangayam breed—Scheme for a grant from the Imperial Council of Agricultural Research—Application of the Pattagar of Palayakottai.*

I have the honour to forward herewith a detailed scheme for the improvement of the Kangayam breed of cattle. The proposal originated from the Imperial Council of Agricultural Research and the scheme has been drawn up mainly on the lines indicated by the Imperial Council of Agricultural Research—*vide* copy of its letter No. F.-52 (2)/39-A.H., dated 22nd June 1939 and also D. O. No. A. H. C.-1/39, dated 12th June 1939 of the Animal Husbandry Commissioner.

2. The Imperial Council of Agricultural Research has proposed that the scheme should be spread over a period of 10 years. It takes 5 years for the first batch of calves born in the scheme to come into milk, and unless the scheme is worked for 10 years, very little information on the results of the experiments will be available. Hence it is necessary that the investigation should cover a period of 10 years.

3. The scheme does not involve any expenditure from the Provincial Revenues, as the entire cost is to be borne by the Imperial Council of Agricultural Research and the Pattagar.

4. The Pattagar will have to feed the cows and young stock in the scheme on a higher ration than he is doing at present, in order to produce the maximum quantity of milk and also to bring the heifers to maturity earlier. He will have to incur extra expenditure in the way of extra concentrated food for each animal in addition to green food and silage in the hot weather. The calves born in the course of the experiments will be weaned at birth and hand fed, and as a result the bull calves so reared may not develop so well as those now reared by him under semi-ranching conditions in which the calves get all the milk of the dams by suckling them. The Pattagar may not therefore realise as much money for the hull calves born in the experimental herd as he would obtain for the calves reared otherwise. In case of failure of rains in any year, the Pattagar will be put to more expense in purchasing fodder from outside. As the value of the Pattagar's contribution towards the scheme depends on all the factors mentioned above, it is not possible to estimate even approximately his share of the cost.

5. The Expert officer to be appointed to work the scheme should be a practical cattle breeder with a knowledge of Genetics and should be familiar with the prenatal handling methods, hand-feeding of calves and the proper feeding of milch-cows and young stock for early maturity. A pay of Rs. 650 was therefore provided for the Expert officer by the Animal Husbandry Commissioner in his original scheme and this sum was reduced to Rs. 600 at the meeting held at Palayakottai in which the scheme was discussed by the Acting Director of Veterinary Services with the Animal Husbandry Commissioner, the Livestock Development Officer and the Pattagar. In the scheme submitted to Government, the pay proposed for the officer was further reduced to Rs. 500 per mensem so as to keep the total cost of the scheme as low as possible after providing for the maintenance of the required number of cows and calves and for the appointment of a Milk Recorder.

6. In view of the special qualifications and experience required of the officer to be appointed, this rate of pay was considered necessary. Moreover, the cost of the staff is to be borne by the Imperial Council of Agricultural Research and the Animal Husbandry Commissioner has agreed that a sufficiently attractive pay should be offered for the Special officer. The pay of the officer may, therefore, be fixed at Rs. 500 in the scale of Rs. 500—25/2—600.

The milk recorder will be a clerk and the lower division scale of pay for clerks, *viz.* Rs. 30—55 may be fixed for him. No special qualifications are required for this post. His main duty will consist in weighing the milk yielded by each cow morning and evening and to record the readings in the usual manner. He will also be in charge of the stores and will issue the daily cattle food and maintain an account.

7. The Pattagar has verbally agreed to the scheme provided the cost of labour is borne by the Imperial Council of Agricultural Research and this arrangement was agreed to by the Animal Husbandry Commissioner at the meeting at Palayakottai referred to above.

8. In the *circumstances* explained in paragraph 4 *supra*, it has been not possible to estimate the Pattagar's contribution towards the scheme, but the details of the cost to be borne by the Imperial Council of Agricultural Research have been worked out and are appended to the scheme under submission. It will be seen that according to the cost sheet now submitted, the total cost of the scheme comes to one lakh.

9. A revised technical programme giving more details is also enclosed as desired.

SCHEME.

The Imperial Council of Agricultural Research desire to improve some of the principal breeds of cattle in India and it is suggested that the Kangayam breed of South India should be included amongst these.

2. The Kangayam breed of cattle in Coimbatore district of the Madras Presidency is a famous draught breed and has been bred with the greatest care by the Pattagar of Palayakottai, one of the largest breeders in India, and his forefathers for generations. It is thought that by selective breeding and intensive management that it will be possible to improve the milk yielding qualities of the cows without impairing the draught qualities of the male. If this can be accomplished the value of this breed will be enhanced.

3. The average milk yield of this breed is about 1,500 lb. milk per lactation with a daily average of 6 lbs. It is noticed that some cows of this breed are fairly good milkers and are much above the average. At Hosur there are 10 farm-bred cows which have yielded over 3,000 lbs. milk in a single lactation, the highest yield recorded being 5,471 lbs. with a daily average of 14·7 lbs. Another cow has given 4,779 lbs. with a daily average of 13·1 lbs. It therefore, appears, possible by careful breeding, good feeding and management to evolve a good milking strain of this breed without impairing the draught qualities of the bulls and it is with this object that the scheme is formulated.

4. The experiment will be carried out on the Pattagar's Home Farm at Palayakottai; the Pattagar will provide the necessary foundation cattle (30 heifers) and buildings to house the animals; he will feed the cows in milk on a ration suitable to cows and heifers of a milch breed of similar body weight and the ration will include a full amount of green fodder or succulent forage such as silage throughout the year; mineral supplement will also be included; he will feed the whole of the milk drawn from the cows to the calves upto six months of age at least and thereafter, full rations of concentrates and green fodder to bring them (heifer calves) to early maturity. This is very necessary as otherwise the experiment may take 15 years or longer.

5. The Imperial Council of Agricultural Research will bear the cost of the Expert Officer in charge of the experiment and it is proposed to appoint one in the scale of Rs. 500—25/2—600. He should be a practical cattle breeder of good experience with a knowledge of Genetics. He should be familiar with pre-natal handling methods, hand feeding of calves and the proper feeding of milch cows and young stock for early maturity. His pay will be borne by the Imperial Council of Agricultural Research. The Council will also bear the cost of a Milk Recorder and the wages of the trained milkmen in the experiment,

travelling allowance and contingencies. The cost of the dairy equipment such, as Herd Recorder, Gerber Tester, milk buckets, milkmen's uniforms, tables, chairs, weighing machine, etc., will also be borne by the Council.

6. The following are the details of the programme proposed to be adopted :—

Technical programme.

In the first place one or two bulls whose daughters have shown a milk yield above the average will be selected.

Secondly, 30 heifers will be selected from dams which have shown a higher milk yield than the average. Heifers are suggested because it is presumed that in such a large herd in which the cows rear their own young under more or less ranch conditions, only a few of them are used to being handled. It is therefore better to get them used to being thoroughly handled several months before they are due to calve. Again, heifers can be educated at once to weaning the calf at birth. If, however, there are good yielding cows which are gentle and used to handling, 10 might be included in this experiment in place of a like number of heifers.

A certain amount of close breeding will be beneficial together with a little in-breeding and it will be no detriment if the two selected bulls are slightly related to the hiefers.

The heifers will be fed on a ration suitable to heifers of a milch breed of similar weight and the ration should include a full amount of green fodder or succulent forage such as silage throughout the year. Mineral supplement should also be included. The experiment will be conducted on full intensive dairy management lines—pre-natal handling and milking, weaning calves at birth and hand rearing; the whole of the milk drawn to be fed to the calves upto six months of age at least, thereafter full rations of concentrates and green fodder to bring the heifer calves to early maturity. Early maturity is essential in order to save time. As this is not a milch breed, it is quite possible that the first generation will not show very appreciable results and for this reason, it is suggested that the experiment must be carried on thoroughly for 10 years, at the end of which period, the progress made can be reviewed. Accurate milk recording is every essential.

The number of animals in the experiment will increase each year and more labour is necessary to look after the increased number. In the beginning, 6 milkmen will be given 3 months' training in pre-natal handling and milking, hand-feeding of calves, etc., at the Bangalore Imperial Dairy Institute and the Imperial Council of Agricultural Research will bear the cost of this training and the pay of the milkmen during training.

I.—*Non-Recurring.*

		Rs.
(*a*) Training of 6 gowallas (milkmen) for three months in the pre-natal handling of heifers, hand feeding of calves, etc., @ Rs. 30 each	..	180
(*b*) Pay and batta for 6 milkmen for three months @ Rs. 12 *plus* Rs. 8 per mensem	..	360
(*c*) Purchase of dairy utensils, *e.g.*, milk recorder, gerber testing set, milk buckets, milkmen' aprons, weighing machine, etc. ..	..	1,000
Total ..	..	1,540

II.—*Recurring.*

Item of expenditure.	First year.	Second year.	Third year.	Fourth year.	Fifth year.	Sixth year.	Seventh year.	Eighth year.	Ninth year.	Tenth year.	Total.
	Rs.	Rs.	Rs.	Rs.	Rs.	Rs.	Rs.	Rs.	Rs.	Rs.	Rs.
Pay of Officer (Rs. 500—25/2—600) ..	6,000	6,000	6,300	6,300	6,600	6,600	6,900	6,900	7,200	7,200	66,000
Pay of Milk Recorder and Storekeeper (Rs. 30—55).	360	360	396	396	432	432	468	468	504	504	4,320
Pay of 2 peons on Rs. 12 (4); 13 (4); 14 (5) ..	288	288	288	288	312	312	312	312	336	336	3,072
Pay of Gowallas	864	864	864	1,008	1,152	1,440	1,728	1,728	2,016	1,872	13,536
Travelling allowance	500	500	500	500	500	500	500	500	500	500	5,000
Office contingencies for the Expert.. ..	1,000	600	600	600	600	600	600	600	600	600	6,400
Total Recurring ..	9,012	8,612	8,948	9,092	9,596	9,884	10,508	10,508	11,156	11,012	98,328
Total Non-recurring ..	..	..	..	..	..	..	..	..	..	..	1,540
Grand Total	..	..	..	..	..	..	..	..	..	..	99,868 or 1,00,000

N.B.—The animals will be supplied by the Pattagar.
Feed and keep of animals will be paid for by him.

Details of cost of employment of gowalas.

—	No. of heifers or cows.	No. of offspring with age.	No. of gowalas to be employed.	Cost.
				Rs.
1st year ..	30 (2½ years)	..	6 @ Rs. 12 per mensem.	864
2nd year ..	30 cows	12 calves 6 months old.	6	864
3rd year ..	30 cows	12 yearlings .. .. 12 calves.	6	864
4th year ..	30 cows	12 yearlings 2 years old. 12—1 year old. 12 calves.	7	1,008
5th year ..	30 cows	12—3 years .. .. 12—2 years. 12—1 year. 12 calves.	8	1,152
6th year ..	10 poor milkers of the originals to be discarded. 20 cows .. .. 12 heifers.	12—3 years .. .. 12—2 years. 12—1 year. 13 calves.	10	1,440
7th year ..	18 cows .. .. 24 heifers.	12—3 years .. .. 12—2 years. 13—1 year. 18 calves.	12	1,728
8th year ..	16 *plus* 24 cows and 12 heifers.	12—3 years .. .. 13—2 years. 18—1 year. 20 calves.	12	1,728
9th year ..	(12 *plus* 24 *plus* 12) cows and 12 heifers.	13—3 years .. .. 18—2 years. 20—1 year. 25 calves.	14	2,016
10th year ..	(8 *plus* 24 *plus* 12 *plus* 12) cows. 13 heifers.	18—3 years .. .. 20—2 years. 25—1 year. 30 calves.	13	1,872
				13,536 or 13,[illegible]

APPENDIX LXXXVII.

Note on Subject No. 34 (f) :—Application from the Government of the Punjab for a grant of Rs. 13,422 spread over three years for a scheme for starting of a Herd Book and Pedigree Registration in respect of the Hariana breed of cattle.

At their meeting held in July 1939, the Governing Body sanctioned a scheme relating to the maintenance of herd books and registration of the Hariana breed of cattle in the Punjab, at a total cost of Rs. 52,764 spread over three years, the contribution of the Council being Rs. 13,422. The Government of the Punjab were required to contribute the balance of Rs. 39,342 towards the cost of the scheme.

2. The Government of the Punjab have now submitted a revised scheme (Annexure) at an estimated cost of Rs. 31,668, of which the Provincial Government is prepared to contribute Rs. 18,246. The Council's contribution in the revised scheme remains the same as in the original, *viz.*, Rs. 13,422. The reduction in the cost has been brought about by reducing the number of Veterinary Assistant Surgeons from 6 to 3 and the amount for cash prizes from Rs. 5,000 to Rs. 2,000 per annum.

3. The advice of the Board is now sought on the point as to whether there is any objection to the supervising staff being reduced and the amount provided for prizes being decreased as proposed. A copy of the revised scheme submitted by the Punjab Government is appended. The point for consideration will, in the first instance, be examined by an appropriate Committee and their report will be submitted to the Advisory Board in due course.

ANNEXURE.

SCHEME FOR THE STARTING OF A HERD BOOK AND PEDIGREE REGISTRATION IN VILLAGES FOR THE HARIANA BREED OF CATTLE IN THE PUNJAB WITHIN SELECTED BREEDING AREAS BY THE ANIMAL HUSBANDRY DEPARTMENT, PUNJAB.

An effort to increase the resources of the villagers is one of the most important items of rural reconstruction and one which deserves every encouragement. In no direction can more wealth be added quickly or more loss saved than in the sphere of animal husbandry.

2. The loss of money sustained at present by Punjab zamindars owing to neglect of proper methods of breeding and feeding is gigantic. Some little attention is now being paid to securing good stud bulls for the mating of their cows but in this direction nothing like enough is being done to meet the requirements of a large Agricultural Province, like the Punjab.

3. Quite apart from those schemes for improvement of village cattle which are at present being financed out of District Board funds, the Punjab Government is helping the cattle breeding industry in a variety of ways. Approximately six hundred pedigree Hissar bulls and a large number of heifers are issued annually at very nominal prices from the Government Cattle Farm, Hissar, to approved breeders for stud purposes. An appreciable number of approved bulls and cows of pure Dhanni breed are also being subsidized by Government in the five districts of Northern Punjab,

viz., Rawalpindi, Jhelum, Mianwali, Shahpur and Attock. There are six Government Grantee Farms in the Montgomery and Multan districts from which pedigree cattle of the Montgomery and Hissar breeds are issued to Punjab breeders. A Government Grantee Buffalo Breeding Farm has also recently been started at Bahadurnagar, near Okara, district Montgomery. Funds have also recently been provided by Government for a Dajal Cattle Improvement Scheme, the Dajal breed being at its best in the Dera Ghazi Khan district.

4. To make the livestock improvement work of the Department more effective and more in accordance with modern animal husbandry development, it is clear that even in the villages this work will need to be carried out on more scientific lines in the future. Our observations show that speaking generally, male stock are being fairly well looked after in the breeding tract as there is a constant demand for them as breeding bulls or as plough bullocks whilst the female stock being in little demand outside the area, have remained neglected and underfed. The poverty of the local breeders in general, aggravated by their small, uneconomic and scattered holdings, has been mainly responsible for this apparent indifference to the rearing of female stock. It is clear, therefore, that if any substantial progress is to be made in future in improving the different breeds of Punjab cattle, the female stock must be more carefully looked after and be better fed and reared.

5. For the purpose of developing the cattle breeding industry of the Province a cattle conference consisting of both officials and non-officials was held in Lahore in November 1936. It was decided at this Conference to start pedigree registration for the important breeds of cattle and buffaloes within specially selected areas of the Punjab, as this is admittedly the most up-to-date and scientific method of tackling the problem of cattle improvement in all countries that have considered this question. To give effect to this decision, it is now proposed to start a herd book and pedigree registration for the Hariana Breed of cattle. This breed has been particularly selected as it is well-known for its good qualities for generations past and is considered as of very special economic importance not alone to the Punjab but also practically throughout the whole of Northern India.

6. To start with, the work of the scheme will be concentrated within small units of breeding areas, selected from districts in which the breed is found to thrive best and with this end in view a unit of approximately a zail in size will be selected from each of the Rohtak, Hissar and Gurgaon districts of the Hariana cattle tract for special attention.

7. The essentials of the proposed scheme as decided at the Cattle Conference were laid down as follows :—

(a) Careful selection of areas.

(b) As far as possible complete castration of non-selected areas.

(c) Very careful selection, by the Civil Veterinary Department, of cows to be entered in the registers kept for this purpose.

(d) An accurate record to be maintained in each of the villages concerned of coverings, births, etc., of all registered cows.

(e) A pedigree herd book to be maintained at the headquarters of the Veterinary Circle, into which entries made in the village register, after periodical check will be copied.

(f) Arrangements to be made for the careful supervision of registers, for the selection of cows for the grading up of young stock, for inoculation against rinderpest, etc., as well as for systematic castrations and for the markink of registered stock.

8. The Conference recommended and the Punjab Animal Husbandry Department readily agreed that in carrying out the above scheme, it should work in very close touch with the Co-operative Department and that the ideal to be aimed at should be the formation of a Co-operative Cattle Breeding Society in each village of the unit selected. The Conference however, considered that the scheme need not wait until this ideal has been reached. Where a Co-operative Society exists or is formed in the village, the Secretary, if literate, should ordinarily be the agent responsible for keeping the village register up-to-date. Where there is no Co-operative Society or there is no literate member of a Co-operative Society, then the agency should be village school master, patwari or some other suitable person. The scheme generally will need to be given publicity through the Commissioners and Deputy Commissioners, who should be asked to give their full help and encouragement to the scheme.

9. Although zamindars in general have not yet fully realised the value of pedigree stock breeding their co-operation in the working of such a scheme is, of course, absolutely essential to its success. To induce them to have their good class animals registered, tattooed for identification purposes and to induce a keen and healthy spirit of competition amongst them, to make it worth their while to produce high class pedigree stock ; and to help them financially towards the extra cost which they will have to incur on better feeding of their animals, it is proposed to award a number of cash prizes, ranging from Rs. 10 to Rs. 30 each, on the occasion of cattle shows, to the best registered cows and their progeny. This is considered a very necessary incentive at this stage to the small breeder. After some little time, registered cows and young stock with the aid of their produce certificates (parchis) will be more appreciated and command some little premium for breeding purposes. The Department's propaganda in favour of buying breeding stock from these areas will give a very useful stimulus to the industry. Once the breeder can find a profitable outlet for his surplus stock there will no longer be any need for the artificial stimulus at present given by means of subsidies.

10. Until the principles of self-help in this matter are, more fully realised, it will be necessary to award these prizes, since continuity of policy is most essential in the successful working of such a scheme. It is, therefore, proposed to provide Rs. 2,000 per annum for this purpose.

11. It is proposed to employ one Veterinary Assistant Surgeon in the scale of Rs. 80—7—150|7—185—8—225 and 4 Stock Assistants in the grade of Rs. 25—1—35 for each of the 3 units of selected breeding areas. The former will be constantly touring in his ilaqa to supervise the details of the scheme and to keep himself in close touch with the breeders. The latter will be required to maintain breeding as well as milk records for areas allotted to them. A fixed monthly travelling allowance of Rs. 25 will be allowed to each Veterinary Assistant Surgeon and Rs. 5 to each Stock Assistant employed under the scheme.

12. The total cost of the scheme for a period of 3 years which will include the pay and travelling allowance of the Veterinary Assistant

Surgeons and Stock Assistants, prize money, etc., will amount to Rs. 31,668

13. The scheme was considered by the Cattle Breeding Committee and the Advisory Board of the Imperial Council of Agricultural Research at their meetings held in November, 1938. As recommended by the Board, the Imperial Council of Agricultural Research, will contribute only towards pay, etc., of the Stock Assistants for a period of three years (Rs. 13,000 approximately) and that the balance of expenditure involved under the scheme in respect of pay, travelling allowance of the Veterinary Assistant Surgeons, prizes, etc., will be borne by the Punjab Government.

14. Two statements showing separately the details of cost of the scheme to be borne by the Punjab Government and the Imperial Council of Agricultural Research are appended herewith.

Statement showing details of cost of the schemes for the starting of a herd book and pedigree registration in villages for the Hariana breed of cattle in the Punjab.

(To be financed by the Imperial Council of Agricultural Research.)

	1st year.	2nd year.	3rd year.
	Rs.	Rs.	Rs.
Pay of 12 stock Assistants in the scale of Rs. 25—1—35 ..	3,600	3,744	3,888
Travelling Allowance (Fixed) @ Rs. 5 per mensem per head	720	720	720
Contingencies ..	10	10	10
Total ..	4,330	4,474	4,618
GRAND TOTAL ..		Rs.	13,422

Statement showing details of cost of the scheme for the starting of a herd book and pedigree registration in villages for the Hariana breed of cattle in the Punjab.

(To be met from the provincial funds.)

	1st year.	2nd year.	3rd year
	Rs.	Rs.	Rs.
Pay of 3 Veterinary Assistant Surgeons in the scale of Rs. 80—7—150/7—185—8—225 ..	2,880	3,132	3,384
Travelling Allowance (Fixed) @ Rs. 25 per mensem (25 × 12 × 3) ..	900	900	900
Contingencies—			
Prizes ..	2,000	2,000	2,000
Miscellaneous charges ..	50	50	50
Total ..	5,830	6,082	6,334
GRAND TOTAL ..		Rs.	18,246

APPENDIX LXXXVIII.

Note on Subject No. 35 (a) :—Poultry work in India.

Attention is invited to a note on "Poultry" by Mr. A. J. Macdonald, Officer in charge, Poultry Research Section, Izatnagar (copy attached—Enclosure). The following observations have been made by him regarding poultry work in India :—

(*i*) Improvement schemes are being launched without sufficient data in regard to the nature of the problems confronting the industry. In the first instance it would be better to study the problems before launching improvement schemes.

(*ii*) Data in regard to the value of using improved breeds, either pure or for crossing, in the villages would be extremely useful.

(*iii*) Most of the centres are trying out too many breeds—it would be much better to try out one or two breeds thoroughly.

(*iv*) The workers in the various Provinces appear to know little in regard to the work outside their own Province.

2. Two poultry husbandry schemes financed by the Council are at present in progress, *viz.*, one in the Punjab and another in the Bombay Presidency. At the meeting of the Advisory Board held in November 1937, emphasis was laid on the fact that, under the present circumstances, research into the diseases of poultry was more important than work on poultry breeding. As a result, poultry disease investigation schemes have been sanctioned in Madras, Bombay, the United Provinces, Bihar and the North-West Frontier Province and similar schemes from other provinces and a few Indian States may receive early consideration.

3. The observations of Mr. Macdonald will be considered, in the first instance, by an appropriate Committee whose recommendations will be circulated to the Advisory Board in due course. The Board may consider it desirable to lay down the general principles to be observed in future in considering poultry breeding schemes.

ENCLOSURE.

"POULTRY—1937-38" BY MR. A. J. MACDONALD.

From a review of the year's work it is apparent that it is now widely realized throughout India that breeding improvement schemes are necessary for the betterment of the poultry industry. Unfortunately the schemes on hand at different centres are severely handicapped by lack of knowledge in regard to all aspects of production and marketing. The epizootic diseases which periodically sweep away huge numbers of fowls together with lack of precise information on breeding, feeding, management, etc., are fundamental problems which will have to be overcome before the various breeding improvement schemes can yield their full value.

In the United Provinces the scheme sanctioned by the Central Government for the erection of a Central Poultry Institute at Izatnagar under the administration of the Director, Imperial Veterinary Research Institute, is well in hand and it is hoped that research work will be commenced during 1938-39. The poultry laboratory will provide facilities for fundamental

research into the various epidemic diseases which sweep out whole poultry populations. A qualified veterinarian will be recruited and sent abroad for two years study prior to taking up investigational work. Facilities will also be provided for physiological and nutritional studies and provision is being made for research into the processing and storage of both eggs and poultry. A poultry farm with accommodation for 1,000 laying birds will provide material for fundamental research together with facilities for practical research into breeding, housing, feeding and general management of different classes of fowls. The work of the new section will be put in charge of an officer with wide practical experience in poultry husbandry and the processing and marketing of poultry products.

In the Punjab the principal work of the Poultry Expert was directed to the standardization of two distinct breeds of Desi fowls. Though some improvement has again been made, considerable more work is deemed necessary before the project can be carried through to a successful conclusion. On heavy clay soil heavy breeds such as Rhode Island Reds and Light Sussex gave better results than light breeds. A scheme for the improvement of table poultry has been started under the auspices of a grant sanctioned by the Imperial Council of Agricultural Research. Under this scheme Asils and Chittagongs will be tested out against improved and unimproved Desi fowls. Losses during hatching and rearing have been materially reduced by alteration in feeding and management.

In Bombay, the scheme for research under the auspices of the Imperial Council of Agricultural Research has been continued at three centres. Trapnesting records for various periods have been obtained from White Leghorn, Rhode Island Red, Black Minorca, Light Sussex, Chittagong, Naked Neck and selected country fowls. Records have also been obtained from Khaki Campbell and Indian Runner ducks. Selection is being carried out on the basis of trapnest records but an outbreak of Ranikhet disease rather retarded progress. In addition to useful work on housing and feeding it was found that fortnightly high pressure spraying of kerosene was effective in controlling ticks. Under the scheme for rural uplift work sanctioned by the Government of India 212 pure-bred male birds were distributed in eight centres and an inspector was sent out to advise the starting and working of poultry centres in these districts. To encourage pedigree poultry keeping in villages premiums were paid to six poultry farmers for the purchase of foundation stock and houses.

In Bengal there has been considerable demand for improved poultry, and during the year 180 cockerels and 167 dozen of eggs were distributed to various centres. The removal of the Poultry Section at Dacca to a new site has so far prevented outbreaks of contagious diseases which had previously retarded progress. As in most former years Rhode Island Reds gave better production than other breeds. The sixth Rhode Island Red X Chittagong which appears to be well established lays as well and appears to be more resistant to heat than pure Rhode Island Reds.

In Madras stocks of White Leghorn, Rhode Island Red, Light Sussex, Black Minorca and an indigenous strain of Chittagong fowls were trapnested throughout the year at Hosur and a number of birds were also kept at seven other agricultural stations. At Hosur the average annual egg production from 78 laying birds was 166·9; 5,504 hatching eggs for stock improvement were sold during the year.

In Assam at the Upper Shillong Experimental Farm, the average annual egg production from White Leghorn, Rhode Island Red, Black Minorca and local crosses was 156·9, 143·2, 125·4 and 137·9, respectively. Imported strains and Khaki Campbell ducks gave good production but gave disappointing hatchability and rearing results. A considerable number of stock birds and hatching eggs were distributed for breeding purposes to villagers.

In Mysore, the Government sanctioned the opening of small poultry farms, at four of the veterinary hospitals to demonstrate and facilitate the distribution of improved poultry to villagers. Sixty stock cockerels, 29 hens, 687 chickers and 4,159 hatching eggs were distributed during the year.

In Baroda, in addition to the distribution of improved breeds a scheme was launched, whereby selected candidates from different districts were trained and provided with capital to start small poultry farms in order to facilitate the distribution of stock cockerels.

APPENDIX LXXXIX.

Note on Subject No. 35 (b) :—Steps necessary for the initiation and Maintenance of Central Herd Books.

It will be recalled that at its meeting held in February 1936 the Advisory Board considered that Pedigree Herd Books for certain important breeds of cattle should be opened and maintained by the Animal Husbandry Bureau of the Council in collaboration with the Provinces and States concerned with each breed, and recommended that as a preliminary step thereto the characteristics of these breeds should be defined and published by the Council. Accordingly, conveners were appointed to draw up a schedule of points in consultation with breeders. The conveners' reports were considered by the Board in November last year and as approved by them the definitions of breed characteristics were published by the Council in February 1939 in the form of Miscellaneous Bulletin No. 27. The initiation and maintenance of Herd Books follow as a sequel to these endeavours.

The attached Note (Annexure) suggests the procedure to be adopted showing how a breeder may apply for registration, what rules should be observed and what arrangements are necessary in the Provinces for this work. It will be seen from the Note that apart from the details connected with the operation of the Herd Books, the most important point to consider is the ways and means of making suitable provisions in the districts for essential services like the recording of milk yields and services and the tattooing of animals. Until these provisions are made registration will have to be confined mostly to recognised Dairy Farms.

The note will be considered by the Animal Breeding Committee in the first instance and their recommendations placed before the Board in due course.

ANNEXURE.

THE STEPS NECESSARY FOR THE INITIATION AND MAINTENANCE OF CENTRAL HERD BOOKS FOR DAIRY CATTLE OF ALL-INDIA IMPORTANCE.

Introduction : Necessity for Central Herd Books.

The importance of Pedigree Registration and the role it plays in the building up of a successful livestock industry have already been dealt with in detail in previous notes*. The work done in India and the efforts of the Imperial Council of Agricultural Research in developing it have also been described in these notes. Suffice it to say here that without the maintenance of such systematic records and the knowledge they provide, selection is not possible of suitable parent animals for breeding purposes, which is the basis of all livestock improvement. It is necessary however, to repeat why, in view of cattle

---

*(1) Definition of Characteristics of Seven rBeeds of Cattle of All-India Importance. (Miscellaneous Bulletine No. 27 of I. C. A. R.).

(2) Development of Pedigree Registration and Milk Recording. (3rd Animal Husbandry Wing meeting).

(3) Milk Records of Cattle in Approved Dairy Farms in India. (Miscellaneous Bulletin No. 18 of I. C. A. R.

breeding being a Provincial subject, it is necessary to establish Central Herd Books. In the first place, there are breeds which are distributed all over India or in more than one Province. In the case of such breeds it is not possible for Provincial activities to serve all the areas concerned in a uniform manner, and the intention is to confine Central Herd Books for the present to such All-India breeds and to establish and maintain them in collaboration with Provinces and States concerned with each such breed. Secondly, if each Province were to have a separate Herd Book for the same breed, a co-ordinating agency will be necessary for standardisation of the Books and for ensuring uniformity in the manner of their operation. Even then with the movement of cattle from Province to Province different Herd Books for the same breed can only result in confusion and hinder systematic development of the breed. It is probably for this reason that the International Convention for the Standardisation of the keeping and operating of Herd Books, established on 14th October 1936, laid down as their first Article that "In principle, there shall be in each State one Herd Book only for a single breed", additional Herd Books being permitted only for very special reasons. In the third place the establishment of Central Herd Books will automatically create an agency at the Centre which can effectively co-ordinate all registration and recording work in the Provinces, act as a clearing house for all information on the subject and ensure the development of this work all over India on uniform lines. Further, though India is not at present a signatory to the International Convention, such uniformity and development on the lines laid down by the Convention are essential. Without this it will not be possible for other countries to assess, from records, the true value of Indian cattle, nor will India be able to build up a lucrative export trade or take her proper place in the International Cattle Market.

Scope.

The object of this note is mainly to indicate how these Central Herd Books may be opened and maintained by the Imperial Council of Agricultural Research, until Breed Societies are in a position to undertake the maintenance and publication of the Herd Books relating to their respective breeds. The essential preliminary work in this connection, namely the definition of breed characteristics, has already been done and is published in Miscellenous Bulletin No. 27 of the Council. This Bulletin lays down authoritatively the characters of Sahiwal, Sindhi, Gir, Kankrej, Hariana and Ongole breeds of cattle and Murrah breed of buffaloes. These and the Tarparker, breed characters of which will be published in due course, are the eight breeds so far chosen for Central registration. The intention is to start Herd Books first for the Hariana, Sahiwal and Sindhi breeds and extend the work to other breeds as and when staff and facilities become available.

Qualification for Entry.

Rules and other details which should govern registration are set forth in the Appendix. Broadly, the first step would be to register all animals which in addition to a milk yield qualification conform to the definitions laid down in Bulletin No. 27 referred to above. In course of time, say within two years of starting the Herd Books, the entry may be restricted to animals whose sire has already been registered in the Herd Book. Eventually, after a further period of, say, five years the books

may be ' closed ', eligibility in future being confined to those animals whose sire and dam have both been registered. At the discretion of the Imperial Council of Agricultural Research, however, a grading register may be opened at the same time for the entry under certain conditions of animals which conform to the requirements but have not been previously registered. Milk yield qualifications for entry into Herd Books will be laid down from time to time for each breed according to age. For the foundation book, to begin with the source of material will be mainly existing Dairy Farms and the areas where premium bulls are working, it is suggested that to begin with the following minimum limits be laid down for a lactation of not more than 300 days, irrespective of age, for the 3 breeds under consideration :—

Hariana	..	..	..	1,500 lb.
Sindhi	..	..	..	2,000 lb.
Sahiwal	..	..	..	2,500 lb.

Marking.

As regards the marking of animals for indentification, it is proposed to insist on a tatoo mark as an essential qualification for registration, but to begin with, the details of the system will be left to the breeder to decide, subject to the reservation that every breeder shall register his system of marking with the Council. The Council will reserve to itself the right to reject any system should they find it conflicting with systems already registered or is otherwise objectionable.

Responsibilities of Owner.

Provision is made in the rules in the Appendix for notification of all births from registered animals and for the compulsory registration of the sales, transfers and deaths of all registered animals and of their progeny. All these conditions shall be binding on every owner or breeder who applies for registration of his animal, and any infringement of the rules or any case of intentional fraud or falsification of records will be punished by cancelling entries made or debarring the owner from privileges of registration for a period to be determined by the Council.

Registration Fee.

It is suggested that for some years at least no fee should be levied for registration or for any of the services connected therewith performed by this Council. In other countries the cost of such undertakings is mainly met by breeders themselves through income from fees, Government providing only certain subsidies and technical advice and supervision. But the conditions in India are entirely different. Though she owns as much as a little less than a third* of the totoal cattle population of the world, this industry is in a very undeveloped state in India. The breeders are poor and illiterate. There is no realisation of the economic advantage of keeping records, and a number of prejudices have to be overcome. A considerable amount of encouragement is therefore, necessary to induce people to come forward to register, and this can be given only by offering free registration. When the scheme becomes popular and breeders realise its value by obtaining higher prices for animals accompanied by a certificate it will be time to introduce a system of fees.

*Total cattle and buffaloes in the world is 690 millions.
Total in India (including 60 per cent. of the States) is 215 millions.

Procedure for Registration.

Any breeder in India who owns stock conforming to the qualifications laid down in the Enclosure may offer his animals for registration. Forms, printed in English and in the local language of the home of the breed, will be obtainable free of charge from the Imperial Council of Agricultural Research, New Delhi. The relevant rules relating to registration will be printed on the back of the form. The form should be filled up and submitted to the Livestock Officer of the Province or State, or other appropriate official appointed for the purpose, who will transmit it to the Secretary, Imperial Council of Agricultural Research, New Delhi with his recommendations after any inspection he considers necessary has been made. If accepted for registration the animal will be entered in the appropriate Herd Book maintained in the Animal Husbandry Bureau of the Council, a number allotted to it and a certificate will be forwarded to the breeder under intimation to the Livestock Officer. The work connected with the inspection of any stock offered for registration will be carried out by the Livestock Officer through his own district staff or through any organisation like a Breed Society should any such exist and should it be deemed by him to be competent for the purpose.

Arrangements for Marking and Milk Recording.

On application being made to him the Livestock Officer will arrange free for the tattooing and milk recording of the animals of small owners. In the case of large owners free arrangements will be made for giving technical advice and for the periodical checking of milk yields.

Correlation of Central and Provincial Herd Books.

The relationship of the Central Herd Books with Provincial Herd Books will depend upon the nature and scope of the Herd Books opened in the Provinces. Should any Province or State decide to have a Herd Book of its own for any of the breeds chosen for Central registration and should they lay down the same qualifications and envisage a complete co-ordination of pedigree and performance as is contemplated for the Centre the Provincial Herd Book will only be a copy of that portion of the Central Herd Book which relates to the particular Province. But if the scope of their Herd Books is limited*, only a selection from them will find an entry into the Central Herd Books. In a number of places in India the local cattle are being graded up with one of the breeds chosen for Central registration, and another Provincial activity is the improvement by selective breeding of these types which show promise of development. Introduction of registration to suit these two types of activities in the Provinces would therefore appear to be an ideal arrangement, and prevent, duplication of work.

Local Organisations Essential.

It will be clear from the above that this scheme of Central registration, or for that matter any large scale scheme for the general improvement of Dairy Cattle in the country at large will depend upon the existence in the Provinces of satisfactory arrangements for extensive milk recording, for the systematic recording of the services of approved bulls

*For example :—They may have only "herd registration", *i.e.*, registration of good herds without much regard to pedigree, or they may register 'pure breds' as is being now done irrespective of milk yields.

and for the marking of their progeny. At present, with rare exceptions, only a very limited amount of registration of pedigree is done and there is no milk recording at all in the villages. A very modest scheme for the introduction of village milk recording financed jointly by the Imperial Council of Agricultural Research and the Provincial Governments concerned has just been started, at the instance of the Council in the home of the breeds selected for Central registration. This scheme, however, is quite inadequate for the initiation of Herd Books and it will need to be developed through the agency of such bodies as Breed Societies, Milk Recording Societies, etc.

Details of Auxilary Organisation required.

At its meeting held in July 1936 the Standing Cattle Breeding Committee of the Imperial Council of Agricultural Research considered *inter alia* that for effective cattle improvement work an adequate Provincial organisation with more staff was essential and they estimated the requirements to be one suitably qualified Inspector and a sufficient number of Stockmen for every 50 bulls at service. With the proposal to open Central Herd Books the time has come to follow up this recommendation and work out the details for building up the required organisation.

The work which this organisation is required to do is to :

(*a*) Record every service of every approved bull.

(*b*) Record the milk yield regularly of every cow served and also of the progeny.

(*c*) Mark the progeny with suitable tattoo marks in the ear.

(*d*) Castrate all scrub animals in the neighbourhood and permanently protect approved animals against Rinderpest.

(*e*) Offer such technical advice as may be necessary in regard to feeding and management.

(*f*) Conduct propaganda in favour of recording and registration and attempt to organise milk recording associations in the villages.

Staff required.

In this work the staff required will depend mainly on the frequency with which milk is to be recorded. Weekly recording will require twice the staff for fortnightly recording or four times the staff required for recording once a month. The accuracy of the records will of course increase with increase in the frequency of recording, but for ordinary purposes of estimating milking efficiency the precision* secured by a month-

*From reviews, by the International Institute of Agriculture, of investigations on this subject it is seen that the errors introduced are :—

	Average per cent.	Highest (rarely noticed) per cent.
Weekly recording	3 to 4	9·5
Fortnightly	2·49 to 9·5	17·95
Monthly	4·69 to 9·75	23

Article 11 of International Convention provides that records shall indicate not only the yield of the animal but the interval between the recorders' visits. This will enable any one to make proper allowances in assessing the true value of the animal.

ly recording should suffice. In this way the maximum number of animals can be recorded with the minimum amount of staff without any undue sacrifice of accuracy.

Ordinarily a bull will serve not more than 80 cows in a year and the first thing that will have to be done when the organisation is established is to mark these animals as and when they are brought for service and begin recording them immediately they come into milk. On this basis and in the light of experience gained previously in connection with the Village Enquiry* it is estimated that one Stockman (who will do recording and tattooing work) will be required for every five bulls or ten Stockmen in all in a unit of 50 bulls under one Inspector. The Stockman will be responsible for milk recording and for maintaining service records and all the records auxiliary to it.

It will also be necessary to have a paid full-time attendant for every bull, whose duty shall be to look after the bull and to see that he does not run indiscriminately with any herd.

The approximate cost of the scheme will be as under :—

		Rs.
One Inspector on Rs. 150 ..	..	1,800
10 Stockmen at Rs. 25 to 30.	..	3,300
50 Attendants at Rs. 12 ..	..	7,200
Contingencies and Travelling.	..	700
	Rs.	13,000

A net work of such organisations is necessary all over India for effecting large scale improvements, but as an experimental measure this work to begin with may be concentrated in the home of each of the breeds chosen for Central registration. Slight variations will be necessary in the Scheme according to the nature of the area and the availability of 50 pedigree bulls conveniently located in it.

As regards the qualifications of the staff the Inspector should be an agricultural or veterinary graduate, preferably possessing post graduate training in Dairying. He should be a man of tact, ability, initiative and enthusiasm to enable him to work among the breeders and for eventually forming them into milk recording organisations. The Stockman should be literate in the local language and should be qualified to do first aid veterinary work and give advice on the management and feeding of cattle under the instructions of the Inspector. He should preferably also be conversant with milk recording work as practised in a Dairy Farm.

As time goes on and Village Milk Recording Societies are formed, the number of subordinate staff can be gradually reduced.

*A village enquiry regarding Cattle and the Production and Consumption of Milk in Seven Breeding Tracts of India. (Miscellaneous Bulletin No. 22 of I. C. A. R.).

ENCLOSURE.

IMPERIAL COUNCIL OF AGRICULTURAL RESEARCH.

Rules and Regulations regarding registration of Cattle in Central Herd Books.

Definitions.—In these Rules and Regulations, unless there be anything repugnant in the subject or context :—

'Council' shall mean the Imperial Council of Agricultural Research.

'Herd Book' shall mean any of the Herd Books published by the Imperial Council of Agricultural Research.

'Registered' shall mean registered in any of the Herd Books.

'Owner' shall mean owner of cattle registered in any of the Herd Book.

1. The Breeds in respect of which Herd Books will be maintained are Sahiwal, Sindhi, Hariana, Gir, Ongole, Kankrej and Tharparker breeds of cattle and Murrah breeds of buffaloes. Date of opening the Herd Book for each breed will be duly notified and applications for registration will be entertained from that date only.

2. Any person, Society, Farm or other body resident or established in India owning any of the breeds of animals referred to in the preceding section may offer his, her or their animals for registration provided they bind themselves to agree to and observe the rules framed hereunder in this behalf.

3. (*a*) Save as hereinafter provided under Sub-sections (*b*) and (*c*) of this Section no animal shall be eligible for entry into the Herd Book unless the sire and dam are already registered.

(*b*) Upto 31st December 1942 or such later date as the Council may in their discretion decide the Herd Book shall open for registration of all cattle which conform to the definition of breed characteristics laid down for the respective breeds in Miscellaneous Bulletin No. 27 of the Council and which satisfy the milk yield qualifications which shall be fixed and notified by the Council from time to time.

(*c*) Subsequent to the date referred to in Sub-section (*b*) of this Section the Council may in its discretion :—

(*i*) close the Herd Book to every animal whose sire as well as dam are not already registered ; or

(*ii*) keep the Herd Book for a definite period, to be decided and notified by the Council, to animals whose sires only have been already registered.

4. No animal shall be entered in the Herd Book unless application for entry has been made whilst it is in India or unless satisfactory reason be given for such application not having been so made.

5. (*a*) No animal can be accepted for registration unless it is plainly tattooed in the ear in indelible ink with such letters and numbers as

may be approved by the Council, no two animals having the same number. Both ears may be used, and the marks and numbers in the ears shall be stated on application for registration.

(*b*) No change in the name of any animal entered in the Herd Book will be recognised by the Council.

(*c*) The exclusive right to use a distinctive word as prefix or affix may be registered by owners, subject to the approval of the Council. No animal may be entered in the Herd Book with a prefix or affix, unless such prefix or affix has been duly registered by the entrant. No prefix or affix which is in the opinion of the Council inappropriate or likely to prove misleading can be accepted. No purchaser will be allowed to add or substitute a prefix or affix in connection with these entries.

6. Save as herein provided under Rule 3 (*b*) :—

(*i*) The birth of every calf born to a registered animal shall be notified to the Council within one month from the date of birth, irrespective of whether the calf is intended for subsequent registration or not.

(*ii*) No calf which is not tendered for entry in the Herd Book within one month from the date of birth shall be eligible for entry thereafter unless a satisfactory explanation of the default shall be given by the owner and accepted by the Council.

(*iii*) Under no circumstances will any animal be accepted for entry in the Herd Book more than three months after the date of birth.

7. All applications for entry in the Herd Book shall be made upon forms supplied by the Council, and shall contain all the particulars prescribed by those forms.

8. The Council may require such evidence in support of the particulars in any entry for the Herd Book as they may deem necessary, and may refuse to accept any entry in respect of which the information furnished shall in their opinion be insufficient or unsatisfactory, and they reserve the right of inspecting any herd and herd records in order to compare the animals entered with the entries made, or for any other purpose.

9. The owner of a bull which is entered in the Herd Book shall give to the owner of any cow served by such bull a certificate of service showing the date of service, which certificate must be forwarded to the Council when the produce is tendered for entry in the Herd Book.

10. The breeder of an animal is the owner of its dam at the time of its birth.

11. The Vendor of any animal which has been entered in the Herd Book shall inform the Council of any transfer of such animal and obtain a Certificate of Transfer for delivery to the purchaser.

If a transfer is not registered within 60 days from the date of transfer, the Council in its discretion may refuse registration of the animal and/or his or her progeny, or may accept the registration.

12. On sales of registered cattle the Seller guarantees to the Purchaser as follows :—

(a) As to the pedigree, including as well the animal sold as the other animals mentioned in the pedigree :—

That every animal which has been bred by himself, from a Bull used by him on his own premises, is the produce of the dam and sire as stated.

That every animal which has been bred by himself, but not from a Bull used by him on his own premises, is the produce of the dam as stated, and is according to the best of his information the produce of the sire as stated.

That every other animal is according to the best of his information the produce of the dam and sire as stated.

(b) As to the date of birth :—

That the date of birth in the case of an animal which has been bred by himself is true as stated.

That the date of birth in the case of an animal which has not been bred by himself is according to the best of his information true as stated.

(c) As to the Service :—

That the service in the case of an animal which has been served by a Bull used by him on his own premises is both as to the Bull used and as to the date of service as stated.

That the service in the case of an animal which has been served by a Bull not used by him on his own premises is according to the best of his information both as to the Bull used and as to the date of service as stated.

That the service stated in the particulars is the last service, and that the animal has not to the knowledge of the seller been in season since the date of the service stated.

That where an animal, when last in season, was served by more bulls than one, that fact shall be stated in the particulars.

That the animals have not at the time of sale or previously to his knowledge been treated in any way calculated to deceive.

(d) As to all other representations :—

That those representations are according to the best of his information true as stated.

13. Subject to the provisions in rule 12 the animal is sold with all faults and errors of description (if any).

14. It shall be the duty of all owners to keep proper records of their stud-breeding activities, such records to be open for inspection at any time by any person appointed by the Council.

15. All deaths of registered stock must be registered within sixty days of death.

16. *All owners bind themselves never to enter in the Herd Book any animal of whose purity of lineage they have the slightest doubt.* Proof may be required of the genuineness of the pedigree and purity of breeding of all animals tendered for entry in the Herd Book and the Council shall have full power to reject any entry at their absolute discretion without being bound to assign any reason therefor.

It shall be the duty of every owner to give information in writing to the Council without delay of every case of alleged mis-representation or inaccuracy in the particulars furnished by any owner or other person with reference to the pedigree or identity of any animal or the entry of any animal in the Herd Book or the notification of any birth of any animal or to the exhibition, sale or transfer of any animal or to the milk or butterfat yield of any cow or heifer which shall *come to his or her knowledge and to assist the Council by every means* in his or her power to investigate every such case.

17. The Herd Book shall be edited and published by the Council at such price as the Council may from time to time determine.

Whilst every precaution is taken as to the correctness of entries in the Herd Book the Council, does not hold itself responsible for any inaccuracies.

APPENDIX XC.

Note on Subject No. 37 (a) :—Technical Programmes of Work of the Veterinary Investigation Officers in Provinces and Hyderabad State for 1940-41.

The Governing Body has sanctioned the extension of the scheme for the appointment of Veterinary Investigation Officers in Provinces (except Sind where the scheme expires in 1942) and Hyderabad State for a period of one year with effect from the 1st April 1940. It is now necessary to fix the technical programmes for the Veterinary Investigation Officers for the period of extension. The technical programmes for 1939-40, as approved by the Advisory Board, are shown in the enclosure attached. It is for consideration whether any, and if so what, changes are required in the existing technical programmes. The technical programme for the Veterinary Investigation Officer, Sind, was sanctioned for one year only and it requires consideration also.

2. The subject will be considered, in the first instance, by the appropriate Committee and their recommendations will be submitted to the Advisory Board in due course.

ENCLOSURE.

TECHNICAL PROGRAMMES OF WORK OF THE VETERINARY INVESTIGATION OFFICERS IN THE PROVINCES AND HYDERABAD STATE FOR 1939-40.

MADRAS.

1. *Haemorrhagic Septicaemia.*—Investigation to be continued as in the previous year on the following lines :—

(*a*) Study on the epizootiology of the disease.

(*b*) Comparative study of the disease with other provinces as regards its occurrence.

(*c*) Studying the history in individual outbreaks.

(*d*) Comparative study of the disease in a District with reference to Blackquarter.

(*e*) Study on the incidence of the disease in different Districts during different months.

(*f*) Study on the extent of loss sustained in comparison to Blackquarter.

(*g*) Study on the behaviour of the disease to seasonal variations.

(*h*) Study on the difference in susceptibility of the various species of animals affected.

(*i*) Study on the duration of the outbreaks.

(*j*) Noting the occurrence of the disease in sheep and goats.

(*k*) Study on vaccination experiments.

II. *Osteomalacia in Cattle.*—Very detailed investigation of the occurrence of the disease to be continued in the Districts of Cuddapah,

Nellore, Kurnool and in other parts of the Presidency, to find out whether *this is due to fluorosis or calcium or phosphorus deficiency.*

(*a*) *Survey of the affected localities of the Presidency with reference* to prevailing conditions in the respective localities.

(*b*) Taking photos of the affected animals.

(*c*) Examination of samples of blood from healthy and affected animals.

(*d*) Collection and submission of soil from localities wherefrom the affected animals have been imported.

(*e*) Collection and submission of soil from the affected localities to a Biochemist.

(*f*) Sending fodder to a bio-chemist for analysis both from the healthy and affected localities.

(*g*) Collection of samples of bones of affected and healthy animals for analysis and comparison.

(*h*) Analysis of water from the healthy and affected localities and comparison of the mineral contents such as Phosphorus, Flourine, etc.

(*i*) Collection of any other information relevant to the disease.

Sheep and Goat diseases.—Investigation to be continued as detailed below :—

III. *Caprine Contagious Pleuro Pneumonia.*—

(*i*) Collection and submission of materials from affected cases for laboratory experiments till the causative agent is definitely established.

(*ii*) *Procuring of affected goats from the field and sending them to* the Principal, Madras Veterinary College, for transmission experiments and finding out the cause.

(*iii*) After definitely knowing the etiology trying vaccination experiments in the field in various outbreaks to control the disease.

IV. *Strike or Entero-toxaemia in sheep.*—Isolation of the causative organism from fresh outbreaks reported and getting the same confirmed.

V. *Anthrax in Sheep and Goats.*—

(*a*) Study on the outbreak of the disease in sheep and goats in an enzootic manner in particular localities.

(*b*) Isolation of the organism from such outbreaks.

(*c*) Conducting vaccination experiments in six centres in different Districts where the disease is noticed in a virulent form.

(*d*) Studying the incidence of communicability of the disease to human beings as the result of handling and eating the carcases.

VI. *Rinderpest in Sheep and Goats.*—

(*a*) Transmission experiments with blood from an affected sheep on a calf.

(*b*) Testing a recovered sheep with bull virus.

VII. *Ciroling Disease of Sheep.*—Detailed investigation will be continued and the caustive agent definitely ascertained.

VIII. *John's Disease in Sheep and Goats.*—Figures relating to incidence only will be collected.

IX. *Chronic Hamaturia.*—Figures relating to incidence only will be collected.

X. *Contagious abortion in Cattle.*

BOMBAY.

1. Continuation of investigation into the causation and treatment of diseases of uncertain origin.

2. Investigation into the following diseases will be continued :—

(*a*) Tuberculosis and Johne's disease.

(*b*) Bovine abortion.

(*c*) Diseases of sheep and goats.

(*d*) Diseases of poultry.

3. Continuation of investigation into methods of control of tick infestation.

BENGAL.

1. *Rinderpest.*—(*a*) Investigation on the breakdown of immunity and the absence of confering immunity by certain brews of the Goat Tissue Vaccine.

(*b*) As to whether various portion of spleen tissue contain different or varying concentration of virus.

(*c*) In view of conflicting results on the viability of rinderpest virus in transit, investigation has to be carried out on improving or standardising the product in this respect by desiccation or otherwise.

(*d*) Other difficulties that may crop up during the course of investigation.

2. *Poultry diseases.*—Collection of data regarding different poultry diseases occurring in Bengal.

3. *Hump sore.*—(To be continued).

4. *Parasitic survey* in Bengal.

5. Miscellaneous (local and other important investigations).

6. A short visit to the Imperial Veterinary Research Institutes.

7. Bovine Lymphangitis.

UNITED PROVINCES.

1. Surra—

Further work on,

(*a*) single prophylactic and curative dose of Naganol in engines,

(*b*) relapses,

(*c*) experimental chemotherapy in bovines,

2. *Rinderpest.*—Further work on immunisation of cattle and buffaloes with Goat Tissue Virus paying special attention to the method of inocculation by scarification.

3. Survey of tick borne diseases of livestock in the Province.

4. Fascioliasis including amphistomiasis and its relation to virus and other bacterial diseases.

5. Sheep and Goat diseases.

6. *Poultry diseases.*—Work to be taken up in collaboration with the Special Poultry Officer at Izatnagar.

7. Field investigation of anaerobic diseases.

CENTRAL PROVINCES AND BERAR.

I. *Diseases in cattle*—

1. Investigation into the incidence of Tuberculosis to be continued with a view to draw final conclusions about the position of the disease in this Province.

2. Enquiry relating to the prevalence of Black-quarter with a view to study the various aspects of the disease to be undertaken.

3. Study of field investigation relating to sterility and abortion.

4. Miscellaneous diseases, such as parasitic affections, the pathological condition affecting important glands in head region in cattle, Cancer horn and important protozoan conditions will also be dealt with.

II. *Diseases in sheep and goats*—

5. Enquiry into the incidence of common type of diseases affecting this class of animals to be continued.

III. *Diseases in poultry*—

6. Investigation relating to the diseases of common occurrence in poultry to be continued.

BIHAR.

1. Equine Encephalomyelitis.
2. Horn Cancer.
3. Mastitis.
4. Sheep and goat disease.
5. Fowl diseases.
6. Miscellaneous.

ORISSA.

1. Black-quarter.
2. Hæmorrhagic Septicaemia.
3. Poultry Diseases.
4. Tuberculosis.
5. Deficiency Diseases.

Assam.

Main items.

1. Investigation into "Kumri" in horses with special reference to deficiency and its relation with the pathological condition known as Osteoporasis.

2. Investigation into a pathological condition in cattle which simulates Bovine Contagious Pleuro-Pneumonia clinically.

3. Investigation into Johne's disease with special reference as to the value of mineral feed.

4. Investigation into Theileriasis in cattle.

Miscellaneous items.

1. Investigation into diseases of fowls.

2. Investigation into a peculiar condition in cattle so far alleged to be a grass poisoning.

3. Investigation into Helminthiasis.

4. Investigation into Micro-filariasis in cattle.

5. Investigation into the effect of Goat Tissue Vaccine in different breeds of buffaloes and hill and mixed breed cattle.

Sind and Ajmer Merwara.

(A) *Sheep and Goat diseases.*

1. Goat Tissue Virus vaccination in sheep and goats in the face of outbreaks.

2. *Wah.* "as locally known", *i.e.*, contagious mastitis and arthritis in goats.

3. Contagious pleuro-pneumonia in goats :—
To continue the vaccination experiments in actual outbreaks.

4. Paramphistomiasis in sheep, with special reference to its treatment.

5. To investigate into other diseases of sheep and goats as and when they occur.

(B) *Diseases of calves.*

1. Pyosepticaemia of sucklings.

(C) *Miscellaneous diseases.*

North-West Frontier Province.

1. Investigation of Filariasis, Piroplasmosis, Trypanosomiasis, and Coccidiosis in Cattle, sheep and goats of low-lying tracts of the Province subject to periodic inundations.

2. Certain parasitic diseases prevalent in sheep and goats of the Province.

3. Poultry diseases.

4. Sheep-pox.

5. Anthrax.

Punjab.

It is proposed to concentrate investigational work on the following diseases during the year 1939-40

1. Tuberculosis.

The incidence of this diseases in the province is being studied under the following heads.

(*a*) *Incidence in Cattle of the Rural areas.*—Enough data has been collected so far to give approximate figures regarding the percentage of infection in indigenous stock.

(*b*) *Incidence in Cattle of Urban areas.*—This enquiry was started in the year 1937-38 and it is proposed to continue this investigation until enough data is collected to enable us to express the results of the enquiry in general terms of Tuberculosis infection in whole of the province.

(*c*) *Incidence in Hill-breed and Cross-breed animals.*—The data collected so far under this head is very meagre but it is contemplated to continue this investigation with a view to obtain more statistics which would make the enquiry comprehensive in this respect.

2. *Incidence and Control of Goat and Sheep diseases.*—Survey in many parts of the province has been done and a brief note on the incidence and control of diseases in goats and sheep in the Punjab has been prepared. Determination of cheap medicinal treatment of various diseases of sheep and goats will be followed up.

Enquiry regarding the occurrence of Rinderpest in sheep will be thoroughly made.

Also special consideration will be given for trying vaccination for sheep pox which seems to be quite common in this province.

3. *Coccidiosis in Cattle.*—Enquiry in plains in the Punjab will be undertaken regarding primary infection of Coccidiosis in animals especially in cattle and if such an infection is found, the species of Coccidia responsible for the disease will be studied and ascertained.

4. *Stomach Worm disease.*—Survey of this disease will be made both *in the living animals as well as by post-mortem examinaitons of animals* slaughtered for food purposes. When clinical cases are found treatment with creap anthelmentics. *e.g.*, Copper sulphate will be tried.

5. *Fowl diseases.*—Miscellaneous.

6. *Fascioliasis in cattle, sheep and goats.*—Attempts will be made to find out the local intermediary host with a view to adopt suitable prophylactic measures and in the season when clinical symptoms in the local animals, various drugs will be tried to find out a cheap and effective curative treatment suited to local conditions.

7. *Deficiency Diseases.*

HYDERABAD.

1. Tuberculosis and Johne's disease.
2. Sheep diseases.
3. Bovine Surra.
4. Osteomalacia in cattle.
5. Liver fluke in Cattle.
6. Rinderpest in buffaloes.
7. Helminthic diseases.

APPENDIX XCI.

Note on Subject No. 37 (b) :—Programme of work for the schemes of Poultry Disease Investigation in Certain Provinces.

The Advisory Board, at their meeting held in November 1938, considered schemes for poultry disease investigation work received from Madras, Bombay, the United Provinces and the North-West Frontier Province and while recommending them for the approval of the Governing Body proposed that the Assistant Poultry Disease Investigation Officers to be appointed under these schemes should be employed in the same way as the Veterinary Investigation Officers in the different Provinces, namely for touring and field investigation—the research work being carried out at the Central Poultry Research Institute, Izatnagar. The Governing Body at their meeting held in July 1939 have sanctioned these and also a similar scheme received from the Government of Bihar.

2. It is desirable that detailed programmes of work to be carried out under these schemes should be laid down. The nature of the work laid down in the parallel case of the Veterinary Investigation Officers is indicated in the Annexure. The details of the programme of work for the poultry Disease Investigation Officers are now for the consideration of the Advisory Board.

3. The subject will in the first instance be examined by the appropriate Committee whose report will be circulated to the Advisory Board in due course.

ANNEXURE.

Extract from Col. Sir Arthur Olver's note, dated the 17th June 1931, dealing with the programme of work of the Veterinary Investigation Officers' in the Provinces.

On appointment each worker should take a course of instruction, at Muktesar, in the technique required for the precise and exhaustive investigation of the most important causes of ill-health, stunted development, and mortality found to exist in the particular province or State concerned.

That these investigations should consist mainly of :—

(a) Thorough post-mortem examinations, and systematic clinical investigations in the affected area, where preliminary microscopic examinations only, such as it may be necessary and possible for field workers to carry out, should be made.

(b) The submission of carefully preserved and suitable material to a laboratory for authentic identification, by reliable laboratory workers, and

(c) Precise records of all clinical data obtainable as to the effects of the disease and all possible sources of infection.

A precise record of every investigation should be made on the spot and a full diary should be kept by the investigating officers, each of whom should be provided with a stenographer-clerk for such work and at least

one peon as well as a field microscope and the necessary quick stains and other material.

Two copies of these diaries should be submitted to the Director of Veterinary Services every month, one for scrutiny and record in his office, and one for submission quarterly to the Imperial Council of Agricultural Research.

In these diaries the results of all examinations of material submitted to a laboratory, and the diagnosis ultimately arrived at, should be clearly recorded and the measures recommended for control of the condition should also be indicated by the Director of Veterinary Services concerned.

* * * * * * *

Workers should remain sufficiently long in an affected area to carry out a thorough clinical investigation of the condition being dealt with and of the local disease producing factors which might affect its spread or development. They should not be employed in carrying out ordinary diagnostic work which falls within the normal duties of the Superior Veterinary Staff of the Province.

A very important part of the duties of these officers should be the precise testing under field conditions, of various remedies and methods of disease control.

With a proper check of their work, in a research laboratory, a mass of valuable information should, in this way, be acquired and recorded and results of great value should be obtained both by the agricultural community and the veterinary profession throughout India.

APPENDIX XCII.

Note by the Secretary, Imperial Council of Agricultural Research, dated the 14th October 1939, on Subject No. 37 (c) :—Technical programme of work for the scheme for the survey of the incidence of helminth infection in India.

The Helminthological Committee of the Advisory Board reviewed the general position of helminthological research in India at their meetings held in November 1937 and 1938, and recommended that before undertaking any research work, a general survey should, first, be made to indicate the incidence of helminth infection in India. The proposal was again considered by the *ad hoc* Animal Husbandry Committee and the Advisory Board at their meetings held in May 1939. It was understood that facilities for undertaking the survey already existed at Madras. Accordingly they recommended that at three centres, *viz.*, the Imperial Veterinary Research Institute, Mukteswar, the Lucknow and the Nagpur Universities adequate staff should be provided for the survey work and that a sum of Rs. 6,100 (spread over two years) should be sanctioned for each centre.

2. The Governing Body at their meeting held in July 1939 approved of the recommendations and allocated funds to the scheme during the year 1940-41.

3. The technical programmes for the schemes at the Imperial Veterinary Research Institute, Muktesar Centre (Enclosure I) and the Lucknow University Centre (Enclosure II) are attached. They will, in the first instance, be considered by the *ad hoc* Animal Pests and Diseases Committee and their recommendations will be submitted to the Advisory Board in due course. The technical programme for the scheme at the Nagpur University will be submitted to the Advisory Board, if received in time.

ENCLOSURE I.

SCHEME FOR THE SURVEY OF THE INCIDENCE OF HELMINTH INFECTION IN INDIA.

Technical Programme of work for Research Assistant, Mukteswar.

As far as Mukteswar is concerned the scheme is intended to complete the survey of helminth parasites occurring in cattle in (1) the Punjab, (2) the North-West Frontier Province, (3) Jammu and Kashmir, (4) Sind, (5) Rajputana and (6) Baluchistan.

The following are the details of the scheme proposed to be conducted at Mukteswar :—

(1) For the first month the Research Assistant as well as the Laboratory boys will be trained to collect, fix and preserve the various kinds of helminth parasites. The Research Assistant will in addition be trained to stain, clear, mount and sectionize the various parasites.

(2) In the second month the Research Assistant will be introduced to the literature on systematic helminthology. He will also

make endeavour to identify the material collected at Mukteswar.

(3) During this period of preliminary training of the staff detailed information will be obtained concerning the principal slaughter-houses in the provinces and States under investigation and their working. Similar information will be obtained about the post-mortem examinations conducted at the Punjab Veterinary College.

(4) Letters will be addressed to the Directors of Veterinary Services of the provinces and States concerned with a request to help us in our survey by means of the staff under them. They will be supplied with necessary instructions in regard to the collection, fixation and preservation of parasites.

(5) The Veterinary Investigation Officers, where they are present, will be addressed to render us similar assistance in our task.

(6) From July to December each year, the Research Assistant will stay for one month at some convenient centre in each of the provinces and States mentioned above and will make his own collection from the abattoires and the adjoining area. The order of his visits to these localities in the first year will be reversed in the year following. Thus he will get an opportunity of visiting each province and State once during monsoon and once during winter : these being the periods in which the animals carry heavy helminthic infection.

(7) For the rest of the period the Research Assistant will work out his collection at Mukteswar with the help of the Institute Library and guidance of the Helminthologist.

ENCLOSURE II.

TECHNICAL PROGRAMME REGARDING SCHEME FOR THE SURVEY OF INCIDENCE OF HELMINTH INFECTION IN INDIA.

(Lucknow University Centre).

The work will be carried out in collaboration with the Civil Veterinary Department of the Provinces included in the area under our charge, and it is absolutely essential that the Directors of the Departments should render suitable assistance in our work in this connection.

The animals at the slaughter houses are brought from long distances and are not confined to the district or town where the slaughter houses are situated. In order to get a representative collection and the data regarding the incidence of infection in cattle the work should be confined to certain selected places, to begin with, in each Province. It is, therefore, desired that the work should start at 24 centres in the area under our charge. For this it is further suggested to have 6 centres each for Bengal and U. P., 5 for Assam, 4 for Bihar and 3 for Orissa. The allocation of centres will be done in consultation with the Veterinary Department in each Province, so that advantage may be taken of their experience on the suitability of the centre for this kind of work.

We are already in possession of a preliminary survey of the helminth Parasites in the Provinces, on the materials received from the various sources. The work will thus be facilitated and be carried out daily for one week at each divisional centre. The staff will then shift to the other centre. In this way, by rotation, it will be possible to examine material at each centre at least four times in the course of two years and this would give a fair idea about the helminthic infections in the Provinces under our charge.

Programme of work :—

It has already been stated that the work at each centre will be concentrated for one week at a time. During this period the following programme will be followed in each centre :—

1. Examination of animals at the slaughter houses and the recovery of helminth Parasites therefrom.

2. General survey of special organs like lungs and livers, etc., for the recovery of cysts, etc.

3. *Complete survey* of *one* animal daily, examining every part of the body for helminth parasites.

4. Calculation of the percentage of infections recovered per animal from the data received and the preparation of charts of percentages of infections.

5. Examination of the material for identification of parasites.

6. Attendance at the Post-mortem examination at a veterinary hospital once a week if it is conducted during the time of this stay in the area concerned.

(For this purpose the Veterinary Officers should be requested to conduct *at least one* Post-mortem examination during the week).

A report on the general work done should be written and sent to the headquarters weekly.

Procedure :—

The methods of examination and procedure shall be supplied to the research assistant during the preliminary training that he would receive at the headquarters. This training is absolutely essential before the work is started on the suggested lines. This would involve a period of one to two months.

The material should be kept at the Veterinary Department of the centre concerned for future reference. Every bottle labelled and a list in duplicate prepared—one to be left with the collection and the other, with the endorsements of the receiving officer, to be sent to the headquarters along with the weekly reports. Only the specimens of special importance should be forwarded to the headquarters for further examination. This would be in accordance with the idea of having preliminary sifting done at each centre concerned as was originally contemplated by the Helminthological Committee of I. C. A. R.

This is an outline of the programme to be carried out at Lucknow centre, but it could be modified according to the particular needs that may arise.

It is hoped that this would give a suitable survey in the course of the two years to enable us to proceed with the special problems of helminthic infections in particular areas to suit the local needs.

It is also suggested that co-ordination of the Scheme for all the three centres of work should be done in a preliminary meeting of the Officers-in-Charge of the various centres.

G. S. THAPAR.

The 26th September, 1938.

APPENDIX XCIII.

Note by the Secretary, Imperial Council of Agricultural Research, dated the 11th October 1939, on Subject No. 37 (d) :—Technical programme of work in connection with the scheme for investigation into contagious abortion of cattle, goats and sheep, at the Imperial Veterinary Research Institute, Mukteswar.

At their meeting held in September 1934, the Advisory Board approved of a scheme for the appointment of a research officer for five years to investigate into contagious abortion of cattle, sheep and goats, at the Imperial Veterinary Research Institute, Mukteswar. The scheme was sanctioned for a period of three years with effect from the 25th May 1939. Mr. J. B. Polding, B.Sc., M.R.C.V.S., has since been appointed to the post of research officer under the scheme. The detailed technical programme of work (Enclosure) in connection with the scheme, submitted by him, is for consideration of the Board.

2. The subject will, in the first instance, be considered by the appropriate committee and their report will be submitted to the Board in due course.

ENCLOSURE.

PROGRAMME OF WORK FOR CONTAGIOUS ABORTION RESEARCH SCHEME, 1939-42.

The primary object of the Contagious Abortion Scheme is to estimate the extent of abortions in India, and from this estimation to judge whether control measures are :—

(1) economically warranted ;

(2) economically possible ;

(3) if found possible and desirable, what form they should take.

To form this estimate a field survey of abortion disease must be made, and since most abortions are probably due to Brucella infections, the work should commence with a study of Brucellosis. If at a later date it is found that much abortion is occurring with no history of Brucella infection, the causes of this must be included in the examination.

In the hands of a small staff such a survey must be representative rather than absolute. For this reason it should cover typical herds of animals, in parts of India representative of the cattle breeding industry. In this respect a partial survey has already been made, although it has mostly been confined to an examination of the Military Dairy Herds, which are possibly not truly representative. The records of this survey are to be found in the Contagious Abortion files of the Imperial Veterinary Research Institute, Mukteswar. From these records it may be said, that blood serum agglutinins specific to Brucella organisms are present in from 20 per cent. to 45 per cent. of Indian cattle, in the herds examined. Abortion relatable to these agglutinins appears to occur, and, further, that such disasters seem to come in cycles. These reports, however, do not clearly indicate, by the latest research methods, (1) what proportion of animals that abort, may be quite definitely said to be free from Brucella infection ; (2) and in the case of animals, that abort and are shown to be infected with Brucellosis, what is the highest and lowest incidence of abortion in first

infected animals, and further, what ill effects, such as subsequent abortions sterility, etc., may pertain. In addition the reports offer little information as to which Brucella strains are present in India ; a point of no little importance in future control work.

To complete the survey, therefore, the following information requires to be collected :—

(1) A fresh estimate of the presence of Brucella agglutinins in representative herds.

(2) A record of the incidence of abortion in the same animals.

(3) A statement relating the presence of specific agglutinins to the occurrence of these abortions.

(4) The confirmation of the presence of Brucella organisms in random samples of the tissues of these aborting animals.

(5) A statement relating the occurrence of these organisms to the Brucella agglutination titre.

(6) A classification in their type strains of representative samples of Brucella organisms.

(7) A collection of data relating to further economic loss, subsequent to, and due to primary infection.

(8) A collection of further information about non-specific abortion.

Considerations of what are representative Indian cattle.

In order to carry out the foregoing survey it first becomes necessary to decide what may be considered to be representative Indian cattle. The Punjab is generally believed to be the chief breeding ground of cattle in India. It contains many Military Dairy Farms, numbers of Grantee herds and other pedigree establishments. Since village cattle cannot be considered, a selection of the aforesaid herds might be considered sufficiently representative for the purposes required. It is thought, therefore, that a start should be made here and that as many herds in the Punjab, located within a convenient working distance of Lahore, should first be examined. The final choice and the number of herds may be settled at a later date, when the Research Officer for Contagious Abortion has familiarised himself with conditions in that area. When a sufficient number of these herds have been dealt with, the centre of work may be shifted to other provinces such as the Bombay Presidency or Bengal.

The system of Examination to be employed.

The system used for making this survey may be worked in several ways, but the only reliable way of collecting satisfactory statistics is for a trained officer to collect them himself in the field.

For working purposes the ground to be covered may be divided into two : (1) the collecting of the previous history and the testing of the cattle for the presence of Brucella infection ; and (2) the isolation of Brucella strains for purposes of identification and classification from suitable cattle under head (1). The first undertaking would take the form of a methodical examination of the selected herds according to a fixed itinerary. The second would be in the nature of a roving commission, but generally following in the wake of the testing where the occurrence of abortions led. Each undertaking must be considered singly and in detail.

The previous history and testing of selected cattle.

For this task a well trained Veterinary Inspector is necessary. He would be required to visit the selected herds in rotation, test certain groups of animals and make a careful record of their history. The data collected would be kept in specially ruled books, an example of which is attached at Appendix I. During the first few months, whilst the Inspector was under training, the Research Officer for Contagious Abortion would accompany him, in order to convince himself that the system suited the conditions and that the Inspector thoroughly understood what was required of him. Further to this, the field technique adopted would have to be as foolproof and as simple as possible. In this respect, loss of efficiency due to unsatisfactory equipment or ill organised routine must be cut to a minimum.

Regarding the test to be used : there is little doubt that the agglutination test, is the only one practicable. The laborious technique of the compliment fixation test rules it out completely, whilst no great advantage is to be found in it. The intradermal test with Brucellins is claimed by some, notably Russian, workers to be more selective than the agglutination test. In my own experience this is extremely doubtful. Moreover, this test entails the handling of the subject at least twice ; a very grave disadvantage. Reverting, therefore, to the agglutination test, it is agreed that this, like all biological reactions, is not 100 per cent. perfect. It should give about 90 per cent.—95 per cent. accuracy. It may take two forms ; the "tube test" and the "quick test". The former gives a reliable estimate of the blood titre. It requires, of course, the co-operation of a well staffed laboratory, if hundreds of samples are to be examined, and it entails all the evils of communications between the laboratory and the field, for example, packing and posting, the risks of breakages and incorrect or lost labels. The quick test will, by suitable adjustment of the antigen, indicate whether a serum is negative, of low titre, or of high titre. It is quite reliable and whole citrated blood may be tested at once, on the spot, out of the same tubes into which the animal has been bled. The need of a large field equipment, packing, transport, and a laboratory, are at once abolished. American range cattle are almost all tested by this means, and Huddleson has entirely dropped the tube method in its favour, except in fine experimental work. Under laboratory conditions, with goats, tied and well controlled, a good bleeder can bleed 20 goats in 30 minutes, and by the quick method these bloods can be tested in similar time. Even under field conditions, provided animals are well located and sufficient local assistance is available to control animals, an efficient officer should be able to test a large number of animals a day.

For a field survey the information offered by the field test is sufficient. Moreover, random samples, say, one in ten, could be despatched, when convenient to the laboratory for confirmation, and check. It is believed that this method should be given a first trial.

Class of animals tested and repeat tests.

There remains the question of which class of animals should be tested, and whether and when repeat tests should be made. At the commencement, the testing of young stock can be omitted. Aged animals, in a herd where the disease is enzootic, owing to small residual blood titre from early infections, are confusing and offer little real information. The ideal time

to test animals is during the lactation of their first infection. In enzootic areas animals are most liable to infection during their first or second pregnancy, although later infections may occur. For these reasons, it is thought that in large herds blood testing should be confined to adult maiden heifers, and animals around their first and second pregnancy. In quite small herds all animals might be tested, provided they have reached adolescence. Ideally, repeat tests should be made after the termination of the pregnancy during which the first test was made, but it is doubtful whether this could be arranged except through the hands of the local staff. A repeat survey should be made in the touring season subsequent to the first survey. By this repetition, maiden heifers of the year before, would be retested during their first pregnancy, and first pregnancy animals of the year before, would be retested during their second pregnancy. The results of this retest would throw some light on the rate of spread of infection. Opportunity would also be afforded to follow up the clinical history from the previous test. Careful records collected in the foregoing manner alone should throw a considerable light on the question of abortion in India. It is intended to supplement this by isolation of as many representative samples of Indian Brucella strains as possible, and their classification into types. Further, as far as possible, cases of what appear to be non-specific abortion would be examined in the central laboratory. The methods of so doing must now be considered.

The isolation and classification of Brucella strains.

Isolation presents by far the most difficult practical side of the survey. Since the Inspector would be entirely occupied with the testing, the only abortions he would be able to investigate would be those that occurred by luck on the actual farm he happened to be blood testing. It is not considered sound policy for him to be taken away from his routine to examine abortions at other places. The work of isolation would then devolve upon the Research Officer for Contagious Abortion. Ideally, when the Inspector finishes testing a farm, he should leave instructions that if any abortions occur the Research Officer for Contagious Abortion should be informed at his headquarters, by telegram. The Research Officer for Contagious Abortion would then visit the farm, retest the subject, and collect specimens. He would then return to his laboratory and culture them. This method would involve that the Research Officer for Contagious Abortion should have his headquarters in the centre of the district in which the work was proceeding : for the Punjab, Lahore. It depends, moreover, on the ease of communications in the district, for unless it were possible for the officer to reach the scene of abortion within two or three hours of the disaster the foetus at least would be unfit for cultural examination. In most cases this would be impossible. In addition the cost of operating from Lahore, might be greater than operating from, say, Izatnagar. On the other hand, either operating from Lahore or Izatnagar, this officer might visit areas or farms where a whole crop of abortions was occurring. In this case cultures could be made from the blood stream, milk and vaginal secretions of animals already aborted and it would be hoped that an abortion or two would take place during his visit, when foetal tissues and membranes could be examined. In this event, if the officer was operating from Izatnagar the cost of several journeys of this nature might make it cheaper to operate from Lahore. The loss of time on train journeys also, would be considerable, and could be little afforded. If the Research Officer for Contagious

Abortion operated from Lahore laboratory facilities would have to be obtained on the spot. These need not be very elaborate, since, where isolations were being made for confirmation purposes only, cultures would only be identified and discarded. For this purpose, gas apparatus, anaerobic jars, and simple culture media could be sent down from Mukteswar. All that would be required would be space to work and the use of an incubator, and water supply. In the case of isolations for classification,—and these would not be great in number, representative samples from different areas sufficing,—these would be only isolated and maintained alive during the touring months, at the close of which the whole collection would be taken to Mukteswar for classification. In default of large outbreaks of abortions taking place isolations would have to depend on the co-operation of the local Veterinary Surgeons of the farms that the Inspector had visited. A suitably drafted set of instructions would be either circulated to them or left with them by the Inspector. The methods most suited for this purpose will be submitted at a later date. Finally, the touring season survey could undoubtedly only be carried out either from Izatnagar or a local centre, the journey from Mukteswar makes this headquarters out of the question. Owing to climatic conditions the typing of the Brucella collection would have to be done at Mukteswar, during the non-touring season. The dye plate method of classification is exceedingly delicate and depends on relative densities of growth. It is, therefore, essential that conditions as near European as possible should pertain. Moreover, the delicate culture media require my own close co-operation with a capable media preparation section such as exists at Mukteswar.

Timing of the survey during the years 1939—42.

Consideration of the timing of the survey leads to the following outline :—During the first month or two of the touring season of the year 1939-40, it appears necessary that the Research Officer for Contagious Abortion and his Inspector should make a rapid tour of the cattle areas of the Punjab, noting methods of keeping animals, facilities for restraining animals, numbers of animals in various districts and herds, and methods of keeping animal records, etc. An impression can also be gained of the geography of the district and the roads and rails serving it, whilst personal contact may be established with the heads of the local Veterinary Service and an estimate formed of the value of local assistance. Having completed this, the scheme set out in this paper could be reconsidered, and modified if necessary to suit unforeseen conditions. At this juncture the actual farms, to be examined would be selected. The remainder of the touring season would be employed in launching the blood testing scheme in the Punjab. Whilst the Research Officer for Contagious Abortion was training the Inspector little could be done in the way of isolation, except where abortions happened in the immediate vicinity. When it became possible to leave the testing solely in the hands of the Inspector, the Research Officer would return to his winter headquarters and commence the work in connection with isolations. The first half of the touring season 1940-41 would be employed in the retest of the same farms in the Punjab, whilst the latter part would be devoted to a survey in say—Bengal and Bombay. The first half of touring season 1941-42 would be used for the retest of these two areas. The non-touring seasons of these years would be employed in typing Brucella strains, general work in improvements of technical methods, pure research, analysing and tabulating the records collected in

the touring months, and any work that appears necessary on non-specific abortion, etc., etc. The final months left of the scheme in early 1942 would be required for the drafting of the final report for tender to the Government of India.

It is fully realised that much of this programme may have to be changed but it at least provides a working plan upon which to base the initial effort.

J. B. POLDING.

19th August 1939.

APPENDIX XCIV.

Note on Subject No. 37 (e) :—Technical programme of work relating to the Poultry Disease Investigation Scheme, Mysore.

The Advisory Board at their meeting held in November 1937 considered a scheme for investigation into poultry disease submitted by the Mysore Government and recommended it to the Governing Body for approval at a cost to the Council not exceeding Rs. 24,470 spread over a period of five years. The Governing Body, at their meeting held in July 1939, sanctioned the scheme for a period of three years at a cost to the Council not exceeding Rs. 14,700.

2. Subject to the annual research grant of the Council for 1940-41 being voted by the Central Legislature, it is proposed to allot funds for this scheme early next year. The Government of Mysore have submitted the attached detailed technical programme of work for approval (Annexure). The programme of work will be considered in the first instance by an appropriate committee whose recommendations will be circulated to the Advisory Board in due course.

ANNEXURE.

TECHNICAL PROGRAMME RELATING TO THE MYSORE POULTRY DISEASE INVESTIGATION SCHEME.

I. A general Epizootological survey of the diseases of poultry encountered in the State on a statistical basis, with a view to ascertain the variety of diseases to which poultry here succumb, on all the Government Farms and many private poultry enterprises distributed all over the State and the incidence of these diseases in them in relation to their age, sex and breed as also to the seasonal and regional conditions.

II. A systematic investigation of the diseases, considered under the following groups, with as objects, the ascertaining of their Nature, Cause, Prevention and Treatment.

1. *Diseases caused by bacteria.*

Fowl coryza, Salmonelloses, Pasteurelloses, tuberculosis and other germ-borne diseases will be investigated with reference to their epizootology, symptomatology, gross pathology, bacteriology, Histology, Immunology, Prophylaxy and therapy.

2. *Diseases caused by Viruses.*

Ranikhet disease, Fowl Pox (Diphtheritic Roup), leucosis and other virus diseases will be studied with reference to their symptomatology, gross pathology, bacteriology, Histology, Immunology, Prophylaxy and Therapy.

3. *Diseases caused by Fungi.*

Aspergillosis, Oidiomycosis and Favus will be considered in regard to their symptomatology, gross pathology, mycology—as far as facilities for this work are available in this Section—Histology, Prophylaxy and Therapy.

4. *Diseases caused by Protozoon parasites.*

Coccidiosis, Black head, Spirochaetosis and other protozoal diseases will be tackled with reference to their epizootology, symptomatology, gross pathology, protozoology, histology, prophylaxy and therapy.

5. *Parasites in relation to poultry diseases.*

A. Helminths.

B. Arthropodes.

The symptomatology, gross pathology, parasitology—as far as facilities for the same are available—prophylaxy and therapy of several conditions resulting from infestations of these endo-and ecto-parasites respectively will be considered.

6. *Nutrition in relation to poultry diseases.*

Diseases resulting from vitamin and mineral deficiencies, as well as other nutritional factors, will be investigated with reference to their symptomatology, pathology, chemistry—as far as facilities are available in this Section—Prophylaxy and Therapy

7. *Diseases of obscure origin.*

Detailed laboratory investigations on some rare and obscure diseases like *osteitis deformans*, Sod disease, will be undertaken, whenever opportunity occurs with a view to ascertain more definite information about them.

8. *Miscellaneous diseases.*

Conditions such as neoplasms, poisoning and other diverse pathological processes will be subjected to systematic laboratory studies in order to ascertain their nature, symptoms, cause, prevention and treatment.

9. *Local Diseases.*

A. Diseases of the Digestive organs..

B. Diseases of the Reproductive organs.

In view of the importance of the diseases of these organs to the utility of the domestic fowl, diseased conditions of the digestive and reproductry systems will be considered in detail with a view to determine their nature, cause, prevention and treatment.

III. The practical application of the preventive and remedial measures derived from the above laboratory investigations to farm conditions in the State, with a view to make poultry farming a sound commercial proposition.

P. M. NARAINSWAMY NAIDU,

Veterinary Research Officer.

APPENDIX XCV.

Note on Subject No. 37 (f) :—Technical programme of work for the scheme for Helminthological Research at the Nagpur University, by Dr. M. A. Moghe.

The *ad hoc* Helminthological Committee of the Advisory Board appointed in 1933 to consider the United Provinces Helminthiasis scheme recommended that research work in Veterinary Helminthology should be distributed geographically so as to obtain the best results and decided that there should be four main centres of helminthological research, *viz*., (*i*) the Imperial Veterinary Research Institute, Muktesar, (*ii*) the Lucknow University, (*iii*) the Nagpur University, and (*iv*) the Veterinary College, Madras. A scheme for research into the helminthiasis of cattle, goats and sheep in the United Provinces by Dr. G. S. Thapar was sanctioned in 1936. A similar scheme for the Province of Madras was approved by the Governing Body at their meeting held in July 1938 and has since been sanctioned.

2. The attached scheme from the Nagpur University (Enclosure I) was considered by the *ad hoc* Helminthological Committee and the Advisory Board at their meetings held in November 1938. The Committee and the Board recommended that sheep, goats and dogs should also be included in the list of hosts to be examined under the scheme and that the scheme be sanctioned for a period of two years at a total cost of Rs. 5,600 to the Council. The Governing Body at their meeting held in July 1939 sanctioned it.

3. The Nagpur University has now submitted the technical programme of the scheme (Enclosure II). It will, in the first instance, be examined by an appropriate *ad hoc* Committee and their recommendations will be submitted to the Advisory Board in due course.

ENCLOSURE I.

COPY OF A LETTER, DATED THE 9TH SEPTEMBER 1938, FROM DR. M. A. MOGHE, M.A., M.Sc., PH.D. (LOND.), HEAD OF THE DEPARTMENT OF ZOOLOGY, COLLEGE OF SCIENCE, NAGPUR, TO THE SECRETARY, IMPERIAL COUNCIL OF AGRICULTURAL RESEARCH, FORWARDED BY THE GOVERNMENT OF THE CENTRAL PROVINCES, UNDER THEIR ENDORSEMENT No. 2362, DATED THE 24TH SEPTEMBER 1938.

I have the honour to acknowledge your letter No. F. 22 (2)|37-A.H., dated the 1st July 1938, and the reply No. 1282|337-X, dated the 29th July 1938, from the Secretary to Government, C. P. and Berar, Agriculture Department, under endorsement No. 1774, dated the 11th August 1938.

2. I am to request you to sanction the following scheme of work and to sanction an amount of Rs. 2,900 as grant for working out the scheme.

3. *Scheme of work*.—In view of the discussion on the progress of Helminthological Research in the Helminthological Committee which met at New Delhi in November 1937, I propose to confine the inquiry at this

Centre to an investigation into the nature and incidence of helminth infection in the area under my charge. The work will extend over a period of one year.

I presume the necessary co-operation from the veterinary staff, particularly in sending material for identification will be forthcoming. For statistical work in connection with the incidence of infection, I propose to examine the cattle, poultry and foodsishes at about 8 typical centres at suitable places from which intensive collections will be made.

4. *Grants* (for one year only) :—

	Rs.
(*a*) Salary of one Research Assistant at Rs. 150 per mensem	1,800
(*b*) Pay of one Laboratory Attendant at Rs. 20 per mensem	240
(*c*) Cost of alcohols, stains, glass-ware	300
(*d*) Contingency charges for postage, stationery, etc.	50
(*e*) Travelling allowance charges	500
Total ..	2,890

5. I hope that the work will finish within one year. This will depend on the co-operation of the veterinary staff at different places in the area under my charge. If the scheme is sanctioned, however, for two years, I think the more satisfactory results could be obtained. So far as I know, no systematic survey of the Helminth Infection in Bombay, Central India States, Baroda, Central Provinces and Berar has been carried out.

If the scheme is sanctioned for two years the grant required will be as follows :—

For the first year	..	Rs. 2,890.	
For the second year	..	Rs. 2,672.	Approx. Rs. 2,680.

	Rs.
(*a*) Salary of one Research Assistant on Rs. 160 per mensem	1,920
(*b*) Salary of Laboratory Attendant on Rs. 21 per month	252
(*c*) Cost of alcohols, stains, glassware, etc. ..	200
(*d*) Contingency charges for postage, stationery, etc.	50
(*e*) Travelling allowance charges	250
Total ..	2,672

6. The work at this centre will be commenced as soon as the scheme and grants are sanctioned.

ENCLOSURE II.

The research grant by the Imperial Council of Agricultural Research is given to me to undertake an inquiry into—

(1) the nature of helminth infection in the area under my charge, and

(2) the incidence of infection.

With regard to (1). In accordance with the discussion at the two meetings of the Helminthological Committee which I attended, helminth parasites will have to be sent to me for examination by the veterinary departments of Central Provinces and Berar, Bombay Presidency, Baroda and Central India States. These will be identified and a check list with their hosts will be prepared. The success of this part of the scheme would depend on the amount of material which I would receive from the veterinary departments of these provinces. I propose to write to the veterinary departments of these provinces to send me as much material as possible and as often as possible for identification so that I shall be in a position to prepare a fairly exhaustive list of all parasites in the area.

With regard to (2), I propose to concentrate collections either by the Research Assistant or by me at definite places. I propose the following places :—Nagpur, Jubbulpore, Amraoti, Bombay, Ahmedabad, Belgaum or Dharwar, Baroda, Indore and Gwalior. At these places, by visiting municipal slaughter houses, it would be possible to make both a quantitative and qualitative estimate of the nature and incidence of infection in cattle, goats, sheep and pigs. This survey will be done at each of these places thrice a year because I think the incidence of infection varies with the season. If parasitological examination of animals is done for about a week at each place in each season, it will give us enough data to fiud the incidence of infection.

The places chosen for this survey are, in my opinion, sufficiently representative of each of the area under my charge.

My scheme is a modest one and is intended to be only a preliminary to determine which parasites require more urgent attention.

Pathological notes will be added wherever possible.

M. A. MOGHE.

APPENDIX XCVI.

Note on Subject No. 38 :—Application from the Punjab Government for a grant of Rs. 2,825 for extension of the Punjab Parasitological Research Scheme for one year.

At their meeting held in October 1932 the Governing Body approved of a scheme submitted by the Punjab Government for a grant of Rs. 20,128, spread over three years, for investigation into the most suitable and economic methods of combating different types of parasitic infection in ruminants concurrently with experiments to determine whether certain mineral deficiencies tend to lower animal resistance to parasitic infection. The investigation was carried out for the stipulated period and terminated in October 1937. The *ad hoc* Veterinary Committee of the Advisory Board who considered the final report of the scheme at their meeting held in March 1938 agreed that the work done under the scheme was only of a preliminary nature and that further work along similar lines was necessary. The Advisory Board endorsed the views of the Committee. The Punjab Government who concur in these views have submitted this proposal (Annexure) for an extension of the scheme for one year, in the first instance, with effect from the 1st October 1940 or a subsequent date. The total cost on account of the extension is Rs. 5,650 and the Provincial Government are prepared to bear half of this cost.

2. The proposed programme of work during the period of extension is similar to that carried out during 1934-37 in the original scheme and the results, therefore, will be entirely of a confirmatory nature. This type of work is, doubtless, valuable but it will be desirable to assess its urgency in the light of the following helminthological schemes, some of which are already in progress and some of which are due to be shortly financed :—

(*i*) The Lucknow and Madras helminthological schemes, both of which are in progress.

(*ii*) The Nagpur helminthological scheme, which is to be financed during 1940-41.

(*iii*) The scheme for general survey of helminth infection at all the four centres, which is to be financed during 1940-41.

The present proposal is for one year *in the first instance*. In case the proposal is approved, it will be desirable to fix up a definite period in regard to the duration of the extension.

3. The subject will, in the first instance, be examined by the *ad hoc* Animal Diseases' Committee and their report will be submitted to the Advisory Board in due course.

ANNEXURE.

PUNJAB VETERINARY DEPARTMENT SCHEME FOR PARASITOLOGICAL RESEARCH AT THE PUNJAB VETERINARY COLLEGE, LAHORE.

A scheme for investigation into the most suitable and economic methods of combating different types of parasitic infection in ruminants in the field, concurrently to determine whether certain mineral deficiencies tend to lower animal resistance to parasitic infection was sanctioned by the Imperial Council of Agricultural Research at a cost of Rs. 20,128

spread over a period of three years. The proposed investigations which were carried out for the stipulated period at the Punjab Veterinary College, Lahore, *terminated in October, 1937*. The report for the year ending September, 1937, was considered by the Animal Diseases Committee and the Advisory Board of the Imperial Council of Agricultural Research at their meetings held in March, 1938. The Advisory Board regarded this work as of preliminary nature and considered that further work along similar lines was necessary. Accordingly, it is proposed to carry out detailed investigations of the problems in question for a further period of one year in the first instance.

During this period of extension a large number of experiments will be repeated to arrive at definite conclusions and the work will proceed along the following lines :—

(A) *Study of Anthelmintics.*

(*i*) A batch of 10 calves and 10 sheep will be kept under observation to ascertain natural helminthic infection present.

(*ii*) According to the infection found they will be sub-divided into groups to test the efficacy of the following drugs :—

(*a*) Copper sulphate and certain insoluble copper salts.

(*b*) Arsenic salts.

(*c*) Kamala.

(*d*) Lobelia.

(*e*) Areca nut.

(*f*) Butea seeds, etc., etc.

If necessary, some of these animals will be artificially infected with particular type of helminths and then treated with the above mentioned drugs.

(*iii*) The efficacy of these drugs will be judged both from the egg-counts and in some cases by counting the number of worms found on post-mortem after the administration of the drugs.

All animals used in this part of the experiment will be fed on balanced rations.

(B) *Study of relationship of mineral deficiencies with helminthic infection.*

(1) The animals for this part of the experiment will be divided into 3 batches of suitable numbers and will be fed as follows :—

(*a*) On a ration deficient in minerals only.

(*b*) On Deg Nullah area grasses.

(*c*) On a balanced ration.

For the analysis of fodder, etc., and balancing of rations help will be taken from the Animal Nutrition Section of the Imperial Veterinary Research Institute, Izatnagar.

(2) Incidence of natural helminthic infections and their progress will be studied in all these groups by examination of foeces at regular intervals.

(3) Their resistance to artificial infection with certain important types of helminths will also be studied.

Some slight changes in the programme may be found necessary as a result of the observations made during the progress of the experiment.

It is proposed to employ a sufficiently Senior Veterinary Assistant Surgeon with past experience of research work to conduct the experiments.

In his work he will be guided and supervised by the Professor of Parasitology, at the Punjab Veterinary College, Lahore.

The scheme is estimated to cost Rs. 5,650 as detailed in the attached statement. In accordance with the general principles, half the cost should be borne by the Punjab Government and half by the Imperial Council of Agricultural Research.

The Punjab Government will continue to provide laboratory accommodation and other facilities necessary for the carrying out of the scheme as in the past.

Statement showing the cost involved.

	Rs.
One Veterinary Assistant Surgeon in the grade of Rs. 80—7—145/7—185—8—225	960
One Laboratory Attendant at Rs. 20 per mensem ..	240
Four attendants for animals at Rs. 13 per mensem each : 13 × 12 × 4 = ...	624
Cost of experimental animals :	
40 calves at Rs. 15 each	600
40 sheep at Rs. 4 each	160
Feed of calves at an average of 15 calves a day at Re. 0-5-0 per day per head	1,711
Feed of sheep at an average of 15 sheep per day at Re. 0-2-6 per head per day	885
Cost of experimental grass, cartage and other special diets ..	300
Contingencies—Miscellaneous charges	200
Total ..	5,650
Contribution by the Imperial Council of Agricultural Research at ½ of the cost	2,825

APPENDIX XCVII.

Note on Subject No. 39 (a) :—*Application from the Government of the Punjab for a grant of Rs. 8,850 spread over five years for a scheme for investigation into the diseases of poultry.*

At their meeting held in November 1937, the Advisory Board emphasised the fact, that under the present circumstances in India research into the diseases of poultry was more important than work on poultry breeding. They also observed in order to take full advantage of the Specialist Officer for research on poultry diseases at the Imperial Veterinary Research Institute, Izatnagar, and in view of the fact that it was not possible for the existing Veterinary Investigation Officers in the Provinces to undertake this work in addition to their already heavy duties, an additional investigation officer was needed in each Province and Constituent State for research work into the diseases of poultry.

2. The Provinces and States were accordingly asked to say what facilities they could provide for the purpose and invited to submit schemes, on the basis of contribution by them of half the estimated cost in respect of each scheme submitted. In response to this schemes were received from the Governments of Madras, Bombay, the United Provinces, the North-West Frontier Province, Orissa and Bihar and were considered by the Advisory Board at their meetings held in November 1938 and May 1939. With a view to maintaining uniformity, the estimates of expenditure were recast and fixed at Rs. 21,200 for each scheme (*vide* Annexure I) spread over a period of five years —the Provincial Governments contributing 50 per cent. of the cost in each case.

3. The attached scheme (Annexure II) submitted by the Punjab Government is now for the consideration of the Advisory Board. The scheme will in the first instance be examined by an appropriate Committee and their report will be circulated to the Advisory Board in due course.

ANNEXURE I.

(SUBJECTS NOS. 43, 44, 45, 61 AND 61-A OF THE AGENDA OF THE ADVISORY BOARD.)

Details of recurring expenditure.

Items.	I year. Rs.	II year. Rs.	III year. Rs.	IV year. Rs.	V year. Rs.	Total. Rs.
1. Pay of Veterinary Inspector in the scale of Rs. 150—10—200.	1,800	1,920	2,040	2,160	2,280	10,200
2. Peon (average taken as Rs. 14 p. m.).	168	168	168	168	168	840
3. Travelling Allowance	1,200	1,200	1,200	1,200	1,200	6,000
4. Contingencies ..	1,600	600	600	60	600	4,000
						21,040
Tuition fee for training at Imperial Veterinary Research Institute, Muktesar	150					150
						21,190
					or	21,200

	Rs.
Total cost of the scheme for five years	21,200
Amount to be provided by the Imperial Council of Agricultural Research (50 per cent. contribution).	10,600

ANNEXURE II.

A SCHEME FOR INVESTIGATION OF POULTRY DISEASE AT THE PUNJAB VETERINARY COLLEGE, LAHORE.

1. It is needless to stress the economic importance of poultry breeding as a cottage industry or otherwise in this Province. There are quite a large number of private Poultry Farms throughout the Province in addition to one Government Farm at Gurdaspur. Poultry keeping as a cottage industry or for home consumption is very common particularly amongst the agricultural classes in rural areas. This industry, therefore, ought to be of great economic value to the people but for one general complaint found against it everywhere. It is that whenever disease appears, fowls begin to die in numbers and at times the entire stock has been wiped out resulting in heavy losses. This is not only true of private breeders but also of most up-to-date Farms. Even the Director of Agriculture, Punjab, has complained the same difficulties at the Government Poultry Farm, Gurdaspur, where the situation has been deteriorating every day. Though the financial implications may not be very great in every case yet such occurrences surely discourage the Poultry breeders.

2. The Advisory Board of the Imperial Council of Agricultural Research at its meeting held in November, 1937, considered the situation and laid emphasis on the fact that in view of the difficulties which have been met within the poultry breeding schemes in various parts of India and of the economic importance of poultry diseases, proposals for research work on the diseases of poultry should be given preference over poultry breeding schemes. It was further considered that in order to take full advantage of the Specialist Officer, who is to be appointed at Izat Nagar on poultry diseases, a wholetime special officer, to collaborate with him is needed at each Veterinary College (or other suitable Veterinary Laboratory) in various Provinces and States.

3. Accordingly it is proposed to appoint a suitable Veterinary Assistant Surgeon (preferably from amongst those who have already undergone training at the Imperial Institute of Veterinary Research, Muktesar) as an Assistant Disease Investigation Officer (Poultry Diseases) on Rs. 115 per mensem in the scale of Rs. 80—7—150|7—185—8—225 for a period of 5 years commencing from 1st April 1940. He will be provided with a peon on Rs. 14 per mensem. The official selected for the purpose will be deputed to the Imperial Veterinary Research Institute, Izat Nagar, for about six months for a further training in Poultry Diseases. On return from that Institute he will carry out a survey of the Poultry disease which infest the province and his duties will be to investigate and collect information on :—

(a) the prevalence of contagious, infectious, parasitic and other diseases of Poultry ;

(b) the incidence of these diseases ;

(c) material relating to such diseases and its examination in collaboration with the Poultry Diseases Expert at Izat Nagar ;

(d) aspects of diseases under the natural and artificial conditions together with the methods of prevention and treatment ;

(e) the extent of the economic losses sustained by the Poultry industry through disease ;

(*f*) practicability of various preventive and curative methods under village conditions, and

(*g*) to conduct minor experiments, determine the nature of infection and to confirm the various observations made during the course of such investigations.

4. This officer will in his working guided and supervised by the present Veterinary Investigation Officer, Punjab, who will frequently consult the Poultry Diseases Expert at Izat Nagar and supply him necessary material for conducting detailed research.

5. The Punjab Government will provide the following facilities in addition to the usual contribution of 50 per cent. of the total cost of the Scheme :—

(*i*) co-operation and advice of the Professor of Pathology together with the use of Punjab Veterinary College Laboratory, which is equipped with most up-to-date appliances for conducting such experiments and analysis as may be found necessary,

(*ii*) the Punjab Veterinary College Library,

(*iii*) office accommodation for the Assistant Disease Investigation Officer (Poultry) Diseases,

(*iv*) land in the college premises for providing housing accommodation for all experimental fowls,

(*v*) co-operation of the Poultry Expert and material available at the Government Poultry Farm, Gurdaspur (with the consent of the Agricultural Department),

(*vi*) Co-operation of the entire district veterinary staff.

6. The total estimated cost of the Scheme spread over a period of five years amounts to Rs. 17,700, as detailed in the statement attached. It will be shared by the Punjab Government and the Imperial Council of Agricultural Research half and half.

Details of recurring expenditure.

Items.	I year.	II year.	III year.	IV year.	V year.	Total.
	Rs.	Rs.	Rs.	Rs.	Rs.	Rs.
Pay of Veterinary Assistant Surgeon on Rs. 115 per mensem in the scale of Rs. 80—7—150/7—185—8—225.	1,380	1,464	1,548	1,632	1,716	7,760
2. Peon (Average taken as Rs. 14 per mensem).	168	168	168	168	168	840
3. Travelling Allowance	1,000	1,000	1,000	[illegible]	1,000	5,000
4. Contingencies	1,600	600	600	[illegible]	600	4,000
Total ..	..	..	..	..	..	17,580
Tuition fee for training at Imperial Veterinary Research Institute, Muktesar.	150	..	..	..	..	150
Total ..	..	..	..	..	..	17,730 or 17,700

Total cost of the scheme for five years 17,700

Amount to be provided by the Imperial Council of Agricultural Research (50 per cent. contribution). 8,850

APPENDIX XCVIII.

Note on Subject No. 39 (b) :—Application from the Director, Imperial Veterinary Research Institute for a grant of Rs. Rs. 47,000, spread over five years, for (1) a scheme of research into the damage caused by ticks to hides and skins in India, and (2) the extension in a modified form of the scheme of research into Warble Flies for a period of five years.

Attention is invited to the attached Scheme (Enclosure I) submitted by the Director, Imperial Veterinary Research Institute. The scheme involves an expenditure of Rs. 47,000, spread over a period of five years.

2. The Council is already financing a scheme for the control of ticks in Bombay involving an expenditure of Rs. 35,700 for a period of 3 years. A copy of the technical programme approved in this connection is attached (Enclosure II). The Council is also financing the Warble Fly Scheme at the Imperial Veterinary Research Institute, Mukteswar, the cost involved being Rs. 29,170 for a period of five years. This scheme is due to terminate on the 31st December 1941. The reasons underlying the proposal to continue the scheme are stated in Section VI of the attached scheme.

3. The scheme will, in the first instance, be examined by an appropriate Committee and its recommendations will be submitted for the consideration of the Advisory Board.

ENCLOSURE I.

IMPERIAL VETERINARY RESEARCH INSTITUTE, MUKTESWAR.

Application for a grant of Rs. 47,000 spread over 5 years for (1) a scheme of research into the damage caused by ticks to hides and skins in India, and (2) the extension, in a modified form, of the scheme of research into warble-flies for a period of 5 years.

In discussing the subject of tick damage to hides and skins in India, the Hides Cess Enquiry Committee, in their *Report* published in 1929-30, remarked as follows : " A large body of opinion holds that next to the warble-flies the parasites which cause the most damage, both direct and indirect, to hides and skins are ticks...... We cannot give separate figures in respect of tick damage, but we are convinced that the loss must be enormous " (pages 42-43). In view of these remarks, it may, at the first sight, appear that it would have been both appropriate and economical if the present scheme were combined with the one (on warble-flies) submitted with my letter, dated the 20th December 1932 (*Proc. Advisory Board of Imp. Council Agric. Res.*, pp. 140-148 ; 1933). At the time of submitting that scheme, however, this Institute was not in possession of definite information concerning the occurrence of tick damage to hides in this or other countries and no mention of such damage was to be found in any of the available entomological publications, some of which contained elaborate and illustrated accounts of the mechanical injury otherwise caused by ticks to livestock. The uncertainty that existed at the time in regard to this question is further exemplified by the fact that the Hides Cess Enquiry Committee referred to one expert witness as having stated that " the tick did not damage the hide or skin very much " (*Report*, p. 43).

During August 1938, Mr. B. N. Soni (Entomological Assistant, Warble-fly Inquiry), while on a visit to Cawnpore, was supplied by a local tannery with a piece of hide showing numerous circular marks of damage reported to have been caused by bites of ticks. About the same time, an intimation was received from the Animal Husbandry Commissioner, Imperial Council of Agricultural Research, concerning reports of similar damage to hides in Bengal and on his advice Mr. Soni visited a leading firm of hide-dealers in Calcutta to investigate the matter. This firm, as also two others visited by him in Madras, produced hides similar to the one obtained from Cawnpore, whilst the information supplied by them disclosed the fact that, in the provinces of Bengal and Madras at any rate, the problem of tick damage to hides and skins had assumed a magnitude comparable with that caused by the warble-fly. Thus, according to one report, 35 per cent. of a consignment of goat skins shipped to America from Calcutta for tanning were declared as complete rejections by the tanners on account of damage caused by " Warbles and ticks ". Furthermore, raw stock raised in certain " ticky " areas, such as those of Dacca and Malabar Coast, was either completely rejected by the tanners or depreciated to the extent of 50 per cent. in price. From available information, it would appear that the position in regard to this matter in the United Provinces, Punjab and North-West Frontier Province is not as serious as in the areas just mentioned, but nevertheless, about 20 to 30 per cent. of the total stock produced in these provinces is reported to be depreciated to the extent of 50 to 60 per cent. in value on account of damage caused by tick bites. Through the courtesy of Mr. J. Bleeck, one of the members of the Hides Cess Enquiry Committee and a representative of the Calcutta Firm mentioned above, we were supplied with two brochures on the subject of tick damage to hides, one written by Walter Freudenberg and entitled " The Argentine Hide Market " (published by Messrs. F. A. Gunther & Son, Berlin) and the other issued by the proprietors of Cooper Cattle Dips and entitled " Damage to Hides caused by Cattle Ticks ". A perusal of these showed that the problem had also assumed a position of considerable importance in certain countries outside India.

The foregoing information by itself did not, however, appear to us to constitute sufficient material for a scheme of research, in the absence of some actual first-hand experimental evidence in support of the information. Pieces of hide derived from cattle experimentally infected with ticks at Mukteswar were therefore forwarded to a leading leather factory in Madras for tanning and the report which has since been received from this firm, as also the condition of the tanned material itself, has established beyond doubt the importance of the problem of tick damage to hides and skins in India. It may be mentioned in parenthesis that this problem also came up for discussion at the Third Animal Husbandry Wing Meeting held at New Delhi during February 1939 and the Meeting unanimously recognized the desirability of formulating a scheme of research in this connection.

Scheme of Research.

I.—*The Regional Incidence of Tick Damage to Hides.*

A survey will be undertaken to determine the relative incidence of tick infestation in different localities in India and will have for its main object the acquisition of such information as may be utilized in correlating

this incidence with the available figures on the extent of tick damage to hides. It is hoped that it will be possible to secure the collaboration of tanners and hide-dealers in this work.

II.—The Relationship of the Species of Tick with the Character of the Damage.

A priori, the severity of the damage inflicted by continuously feeding ticks (*e.g.*, *Boophilus australis*) should be greater than that inflicted by interrupted feeders (*e.g.*, *Hyalomma aegyptium*). On the other hand, it is equally probable that the severity is dependent on the strength and structure of the mouthparts of the species of tick concerned. Some indication on this point is likely to be obtained as a result of the survey referred to in the preceding section, but it would be very desirable to undertake a series of large-scale experiments with different species of ticks and also with different stadia of the same species of tick in order to determine the relative effects produced by their bites on the skin. A problem of this kind does not arise in the case of the warble-fly, where the question of damage is exclusively one of the number of grub-holes.

III.—Periodicity of Tick Damage.

The investigation of this problem requires a much fuller knowledge, than what we possess at present, of the life-history and bionomics of the species of ticks commonly parasitic on cattle in India. As one specialist in this line of work has remarked, " The life-history and bionomics of most of the Indian species are as yet unknown ", although a knowledge of this is " absolutely essential before satisfactory measures can be taken for the control of ticks " (*Rec. Ind. Mus.*, vol. xxx, p. 219 ; 1928). Since the establishment, in 1933, of an Entomological Sub-section at the Imperial Veterinary Research Institute, Mukteswar, some observations have been carried out on the life-history of a few of the more common Indian species of ticks, but in the absence of a staff requisite for such work, progress in this direction has been necessarily slow. Considering the magnitude of the problem, it is essential that it should receive the full-time attention of a trained entomological worker.

IV.—Damage caused by Tick Bites to Goat Skins.

Little exact information is available concerning the extent of damage caused by ticks to goat skins. On this point, the remarks of the Hides Cess Enquiry Committee are as follows : " Ticks too are found on the bodies of goats, but expert opinion is not unanimous that they cause very serious damage to the skins " (*Report*, p. 45). It is therefore proposed, in the first instance, to undertake a series of intensive experiments to determine whether the species of ticks commonly parasitic on goats are capable of causing any appreciable damage to their skins at all. If the results of these experiments are positive, then further investigation will be proceeded with on the same lines as those indicated in the case of cattle ticks.

V.—Control of Ticks.

It is not possible to formulate definite proposals under this head until detailed information is available concerning the species of ticks commonly involved in causing damage to hides and skins and also the localities where control operations against these pests will have to be organized. Broadly

speaking, the line of work that it is proposed to pursue will be as given below :—

(1) *Use of Cattle Dips.*—In collaboration with several Sections of the Institute, a series of experiments will be undertaken with a view to evolving a dip suitable for use under the climatic conditions of India and with due regard to the dipping experiments at present being carried out in the Bombay Province under a scheme sanctioned by the Imperial Council of Agricultural Research, so as to avoid all unnecessary duplication. An examination of this latter scheme shows that it is primarily concerned with assessing the value, under the rural conditions of that province, of two standard arsenical dips that are largely in use in countries outside India. While the importance of an investigation of this kind is fully recognized in view of the immediate need of applying combative measures against the rapidly increasing tick population in India, one can hardly overestimate the value of the suggestion made in this connection by a member of the Second Animal Husbandry Wing Meeting held in Madras in 1936, namely, that " Chemical Experts in India should try to evolve a suitable dip to be manufactured in this country " (Proceedings, p. 46), for this suggestion would seem to be warranted not only by reason of the high cost of imported proprietary dips, but also of the fact that, according to a bulletin issued by the Council for Scientific and Industrial Research, Australia, the parasiticidal value of a dip is in all probability influenced by climatic conditions (*Cattle Tick Pest and Methods of its Eradication*, Pamphlet No. 12, p. 18 ; 1929). As a matter of fact, the dips that are commonly in use in the three well-known tick-infested countries of the world, namely, South Africa, U. S. A., and Australia, are those manufactured locally in those countries (*e.g.*, Natal Laboratory Dip, Queensland Dip, etc.), with due regard to the species of ticks which it is being sought to combat.

In carrying out the dipping tests, it is proposed to make use of both permanently-installed (concrete) and portable dipping vats. As for the latter, de Jesus (*Philippine Journal of Animal Industry*, Vol. II, p. 279 ; 1935) has described a cheap dipping vat capable of being " easily transported " from one locality to another and suitable for being rented by stock-owners who " may not be able to afford a cattle dipping plant due to the high initial value of constructing the vat ".

(2) *Biological Control of Ticks.*—Although the control of insect pests by means of their natural parasites has now assumed a position of paramount importance in Applied Entomology, the possibilities of this line of work in reducing the tick population of a locality was not recognized until as recently as the year 1907, when Howard, in the United States of America, described a species of hymenopterous parasite (*Ixodiphagus texanus*) bred from nymphal Haemaphysalis ticks. During the following year, the same worker described a second species of parasite (*Hunterellus hookeri*) bred from specimens of the dog tick, *Rhipicephalus texanus*, while four years later, the occurrence of this parasite was also reported from France. The subject of tick parasites is at present under active investigation in the United States of America, while, according to Larrouse and his collaborators (1928), the introduction of *H. hookeri* for the control of the dog tick, *Dermacentor variabilis*, in Noushon Island (Massachusetts) has been followed by highly encouraging results. Similarly, Brumpt (cited by Cooley, 1927-28) states that " *H. sanguineus* is rarest in France where the parasite is present ".

In India, *H. hookeri* was recorded for the first time in 1921, when it was taken by Ballard and Fullaway from a bull terrier dog at Coimbatore, and again for the second time in 1938, when numerous examples of this parasite were bred at Mukteswar from a consignment of Haemaphysalis ticks received from the Province of Bombay. It would therefore be of the greatest interest to raise broods of *H. hookeri* under previously determined optimum conditions in the laboratory, so as to have sufficient material in stock for massive liberation at selected points in the more heavily tick-infected localities. An obvious step in this direction would be to undertake periodical tick surveys in order that a continuous supply of parasitized ticks may be available for experimentation, for it would appear that, under natural conditions, the proportion of such ticks is very small. Thus, Cooley (1934) records having bred *H. hookeri* from only 15 out of 260 lots of ticks collected from different localities in South Africa between June and October 1928, the parasitized ticks having been in every case taken from the hare, *Lepus zuluensis*. This observation incidentally indicates the desirability of including certain species of wild animals in the proposed survey and the enormous amount of labour that is likely to be entailed in consequence. As pointed out by Cooley (1927-28), two of the primary requirements for an enterprise of this kind are "(1) enough employees to carry out the tremendous amount of detail required for the work; and (2) equipment, such as animal cages, cage racks, infesting bags, microscopes, as well as vials, pill boxes and scores of items of petty equipment".

VI.—*Continuance of the Warble-fly Investigation on a modified scale.*

The Warble-fly scheme, as originally drawn up, had for its objects (*a*) the acquisition of all essential information concerning the life-history, bionomics and distribution of the species of warble-flies parasitic on cattle and goats in India, and (*b*) on the basis of the information thus acquired, to devise measures for the control of these pests. While there is every reason to hope that in so far as the ox warble-fly (*Hypoderma lineatum*) is concerned, these objects will be duly fulfilled within the period of the five years for which the scheme has been sanctioned, the subject of the goat warble-fly (*H. crossi*), however, has developed into a problem of greater magnitude than was anticipated and it is therefore suggested that the inquiry on this latter species be combined with that on ticks and continued for a further period of five years. I may perhaps explain that the reason why researches on these two species of flies have not progressed at the same rate is that, while a considerable amount of authentic information is already available on the bionomics and control of *H. lineatum* as a result of the work done in this field in Europe and America, the problem of the goat-warble-fly represents as yet an almost virgin field for study and offers little scope for the application of "adaptive research", such as has been suggested by the Hides Cess Enquiry Committee (*Report*, p. 42) with reference to the ox-warble-fly. The staff engaged on the combined investigation would also be capable of functioning as an advisory body upon the subject of warble-flies generally and of holding periodical field demonstrations to popularise the measures that are at present being worked out for the control of these pests.

If the scheme outlined above is approved, it is requested that it may be implemented with effect from the date following that on which the

present warble-fly scheme is due to terminate (31st December 1941), so as to ensure continuity of the work on the grat warble-fly. In the meantime, the services of the staff at present engaged on the warble-fly scheme will be utilized, without additional cost to the Council or any special efforts on the part of the members of the staff themselves, for collecting preliminary information concerning the relative incidence of tick infestation in different localities in India, for, it is almost needless to say, this information would be of very material use in drawing up a detailed programme of work if or when the proposed scheme is put into operation.

In conclusion, I may mention that the Hides Cess Enquiry Committee proposed an expenditure of one and a quarter lakh of rupees per annum on an inquiry on warble-flies and ticks in India, and in their opinion "the cutting down of any expenditure under this head and the transference of that portion to any other activity will not yield the same aggregate return to India" (*Report*, p. 80). In view of these remarks, the grant of Rs. 47,000 that is being applied for the proposed scheme can perhaps by no means be regarded as excessive.

Expenditure Statement.

Serial No.	Item.	1st year.	2nd year.	3rd year.	4th year.	5th year.
		Rs.	Rs.	Rs.	Rs.	Rs.
1	Pay of one Assistant Entomologist @ Rs. 200—15—350 (E.B.)—20—650 per mensem.	2,400	2,580	2,760	2,940	3,120
2	Leave salary	200	200	200	300	300
3	Pay of two Entomological Assistants @ Rs. 100—5—150 (E.B.)—5—200 per mensem each.	2,400	2,520	2,640	2,760	2,880
4	Leave salary	200	200	200	300	300
5	Pay of two Laboratory Subordinates @ Rs. 24—1—33 per mensem each.	576	600	624	648	672
6	Pay of a Peon @ Rs. 14 per mensem	168	168	168	168	168
7	Travelling allowance	2,000	2,000	2,000	2,000	2,000
8	House rent	554	587	619	651	684
9	Cost of two portable dipping vats	300	..	..	..	..
	Total ..	8,798	8,855	9,211	9,767	10,124

= Rs. 46,755
or
Rs. 47,000

ENCLOSURE II.

SCHEME FOR THE CONTROL OF TICKS.

Technical Programme.—In respect of Cattle Dipping Tanks.

1. The Veterinary Investigation Officer accompanied by the local Veterinary Assistant Surgeon will visit the villages where people have agreed to construct a Cattle Dipping Tank at their own expense to make the following arrangements :—

(*a*) Selection and acquisition of site.

(*b*) Appointment of a committee for the following :—

(*i*) To raise funds required for the construction of tank.

(*ii*) To give assistance to the staff in dipping operations and to arrange regular dipping of all animals.

(*iii*) To supervise the tank and the Chowkidar during the absence of the Veterinary Assistant Surgeon.

(*iv*) To maintain a general interest in the dipping operation in the village.

2. The construction of the tank will be undertaken immediately the money is collected according to the approved plan, the assistance of the Public Works Department or District Local Board Engineering Staff being obtained in this connection as far as possible.

3. While the construction work is in progress the following information will be collected from each village :—

(*a*) Classification of all animals into various breeds, draught and other adult stock, milch stock and young stock.

(*b*) The general condition of the herd and the body weight of the following 50 selected animals :—

Calves, 6 months to 1 year of age	10
Young stock, 2 to 3 years of age	10
Milch stock	10
Draught stock	10
Debilitated animals resulting from tick infestation..	10
	50

These animals will be kept under particular observation throughout the period of dipping operations.

(*c*) Species of ticks found on the livestock, taking particular note of whether continuous or intermittent feeders predominate.

(*d*) The extent of tick infestation and whether it is particularly heavy throughout the year or seasonal.

(*e*) The number of cattle sheds where tick infestation is extraordinarily heavy.

(*f*) The incidence of other external parasites and parasitic skin diseases.

4. The dipping operations will be conducted as follows :—

(a) where tick infestation is heavy throughout the year :—

(i) Once a fortnight throughout the year.

(ii) Once a fortnight for six months and once a month for three months while the infestation is at its lowest and once a week for the remaining three months while the infestation is particularly heavy.

(iii) Once a fortnight for nine months and once a week for the three months during which the infestation is very heavy.

(*Note.*—If dipping is undertaken once a week the strength of the dipping solution will be reduced.)

(b) where the infestation is generally seasonal :—

(i) Once a month for six months and once a fortnight during the tick season.

(ii) Once in every three weeks throughout the year.

5. The capacity of each dipping tank in gallons will be marked from the 4th foot upwards so that the quantity of the solution in the tank can be readily indicated.

6. Generally Cooper's Cattle Dipping Solution will be used but if possible non-poisonous dips, for instance, one made of derris root powder will be tried and comparative results noted. Whenever arsenical solution is used the strength of the solution will be tested before the operation by means of the testing apparatus supplied by the firm.

7. Dipping operations will be carried out at such intervals as stipulated by the Director of Veterinary Services after taking into consideration the information collected under items 3 (c) and (d).

8. On each occasion the Veterinary Assistant Surgeon in charge will visit the village one day prior to that on which dipping operations are to be conducted. He will be responsible for testing the strength of the solution and seeing that the right quantity of solution is in the tank and personally supervise dipping of all animals.

9. Animals which cannot be dipped due to lameness, debility or other causes and buffaloes will be sprayed by means of bucket spray pump in the draining pen.

10. After each dipping the Veterinary Assistant Surgeon will submit the following return to the Director of Veterinary Services, Bombay Presidency, through the Veterinary Investigation Officer.

Name of the village.	Cattle census.	Date of dipping.	No. of cattle dipped or sprayed.	The extent of tick infestation at the time of dipping.	Any harmful effects noted during dipping.	Remarks.

11. If any harmful effects due to dipping are observed the Veterinary Investigation Officer will visit the village and endeavour to arrive at the cause and remove it.

In respect of spraying operations.

1. The spraying machines will be obtained from England. At first one machine will be purchased and when it is found working satisfactorily the second will be ordered.

2. The staff required for the spraying operations will be appointed by the Director of Veterinary Services, Bombay Presidency.

3. The Veterinary Investigation Officer and the Spraying Officer will, in the first instance, tour in the villages of the area to make the arrangements and to collect the information mentioned below :—

(*a*) Selection of a convenient site for erecting the machine.

(*b*) Appointment of a committee for the following :—

(*i*) To give assistance to the staff in spraying operations and to arrange spraying of all animals.

(*ii*) To maintain a general interest in the spraying operations in the villages.

(*c*) Classification of all animals into various breeds, draught and other adult stock, milch stock and young stock.

(*d*) The general condition of the herd and the body weight of the following 25 selected animals :—

Calves, 6 months to 1 year of age .. .	5
Young stock 2 to 3 years of age	5
Milch stock	5
Draught stock	5
Debilitated animals resulting from tick infestation ..	5
	25

These animals will be kept under particular observation throughout the period of spraying operations.

(*e*) Species of ticks found on the livestock, taking particular note of whether continuous or intermittent feeders predominate.

(*f*) The extent of tick infestation and whether it is particularly heavy throughout the year or seasonal.

(*g*) The number of cattle sheds where tick infestation is extraordinarily heavy.

(*h*) The incidence of other external parasites and parasitic skin diseases.

4. Generally the solution prepared according to the following formulae will be used but if possible, non-poisonous spraying solution, for instance one made of derris root powder will be tried and comparative results noted. Whenever arsenic solution is used the strength of it will be tested before the operation by means of the testing apparatus.

White arsenic	8 lbs.
Sodium carbonate	24 lbs.
Pure tar (Pix liquidum)	1 gallon.
Water	500 gallons.

Directions.—Arsenic and sodium carbonate are dissolved by boiling in 25 to 30 gallons of water after which the fire is drawn and the solution allowed to cool a little. The tar is then added and finally the mixture added to sufficient water to make 500 gallons.

5. Spraying operations will be carried out at such intervals as stipulated by the Director of Veterinary Services, Bombay Presidency.

6. The Spraying Officer will take the sprayer to each village and carry out the spraying operations under his personal supervision. He will be held responsible in testing the strength of the solution.

7. After going round all villages the Spraying Officer will submit to the Director of Veterinary Services, Bombay Presidency, through the Veterinary Investigation Officer, the return which is mentioned under the programme in respect of dipping tanks.

8. If any harmful effects due to syraying are noticed the Veterinary Investigation Officer will visit the villages, endeavour to arrive at the cause and remove it.

In respect of both dipping and spraying operations.

1. Indent for Cooper's Cattle Dip and other drugs required for preparing dipping or spraying solution will be submitted to the Director of Veterinary Services, Bombay Presidency, by the Veterinary Officer in charge of the dipping and spraying operations. Cooper's Dip and dip made of derris root powder will be obtained from Messrs. Wilkinsou, Heywood and Clark, Ballard Estate, Bombay, and the drugs required for home made spraying solution from the Government Medical Stores Depot. Bombay. Other articles required in these operations will also be purchased with the approval of the Director of Veterinary Services.

2. The Veterinary Investigation Officer will visit periodically the villages where dipping and spraying operations are carried out and submit progress reports dealing with the following points :—

(*a*) Whether arsenic dip is working satisfactorily with safety to human beings and cattle.

(*b*) The extent of the infestation of ticks in particular and of the skin diseases in general.

(*c*) Whether any untoward results have occurred when animals debilitated in conditions are subjected to dipping or spraying.

(*d*) Dipping and spraying operations carried out in buffaloes and the effect of the arsenic solution on their skin.

(*e*) The results achieved in controlling the tick infestation and other external parasites in the village.

(*f*) Improvement effected in the general health of cattle in the growing capacity of young stock, in the working capacity of draught animals, in the yield of milk in the case of milching animals and in the body weight of animals which were debilitated previously due to ticks.

(*g*) Species of ticks present on the body of the livestock noting the species which have become scarce or eradicated and the distribution of continuous and intermittent feeders in comparison with those found prior to the introduction of dipping or spraying operations.

3. The officer in charge of dipping and spraying operations will submit annual report of his operations in duplicate to the Director of Veterinary Services, Bombay Presidency, through the Veterinary Investigation Officer and the last mentioned officer will submit a consolidated annual report to the Director of Veterinary Services for transmission to the Imperial Council of Agricultural Research, Delhi, in which all the research points enumerated in paragraph 10 of the scheme will be dealt with.

4. The Director of Veterinary Services, under whose control the work will be carried out will administer the funds according to the demands of the experiments at different villages re-adjusting, if necessary, the expenditure mentioned in paragraph 15 of the scheme. He will, however, see that the expenditure does not exceed the total grants made.

Extract from the Proceedings of the Animal Husbandry Technical Programmes Sub-Committee, January 1937.

* * * * * * *

Item (c) Scheme for the control of ticks—Bombay [Subject No. 5 (c) of the Agenda of the Board].—In discussing this scheme, it was pointed out that it was essentially a scheme to ascertain how periodical dipping could be applied under Indian village conditions for the reduction of the numbers of ticks and of the diseases transmitted by them. For exact determinations as to the amount of fluid required per animal data already existed on Government farms, and this could be further tested on such farms, if necessary. It was considered that, where the dips to be used were to be paid for by villagers, it would be difficult to keep exactly corresponding controls in any one village. Arrangements should, however, be made for 100 animals in a selected village and a corresponding number of controls to be sprayed with the particular solutions in order to obtain data as to their general effect on health, development, milk, yield, etc. Item *(f)* on page 4, paragraph 2 of the printed programme was, however, considered too elaborate to be practicable in such a scheme. It was suggested that some soap should be added to the dipping solution and that non-poisonous dips should be tested. The strength of the dip would have to be varied according to the frequency of dipping required to deal with particular kinds of ticks, in accordance with their feeding habits. The influence of the time of day and season on the effect of the various dipping solutions on the skin would also be studied.

APPENDIX XCIX.

Note on Subject No. 39 (c) :—Scheme for the preparation of a critical monograph on ' Rinderpest in India '.

At its meeting held in March 1938, the Advisory Board adopted the recommendation made by the Imperial Council of Agricultural Research Editorial Committee that a few critical monographs should be prepared by the Council, the subjects to be taken up being ' Animal Nutrition ', ' Rinderpest ', ' Dry Farming ' and ' Rice Breeding ' (Annexure I). The intention was that the monographs should be drawn up on the lines recommended by Sir John Russell in his report (relevant extracts enclosed—Annexure II).

The special Joint Committee of the Governing Body and the Advisory Board recommended, at their meeting held in July 1938, that details as regards the cost and the necessity for publishing monographs should be worked out and examined for submission to the Governing Body.

The matter has been examined and it is considered that Mr. J. R. Haddow, B.Sc., M.R.C.V.S., D.V.S.M., I.V.S., Veterinary Research Officer in charge, Section of Serology, Imperial Veterinary Research Institute, Mukteswar, should be entrusted with the preparation of the monograph on Rinderpest. A scheme received in this connection from the Director, Imperial Veterinary Research Institute, Mukteswar (Annexure III), is now for consideration. The scheme involves a non-recurring expenditure of Rs. 6,700, including an honorarium of Rs. 1,250 proposed to be granted to Mr. J. R. Haddow for preparing the monograph. It will be first be examined by an appropriate committee whose recommendations will be submitted to the Advisory Board in due course.

Proposal for the preparation of the monograph on ' Dry Farming ' has been approved by the Governing Body at its meeting held in July last. A similar proposal for the preparation of the monograph on ' Animal Nutrition ' has been submitted to the Advisory Board separately. Proposal in regard to the monograph on ' Rice Breeding ' will be submitted when ready.

ANNEXURE I.

RECOMMENDATIONS OF THE I. C. A. R. EDITORIAL COMMITTEE HELD AT NEW DELHI ON THE 10TH MARCH 1938.

1. *Sir John Russell's recommendation regarding publications and the preparation of special monographs.*—The Committee agreed that the Council should undertake the preparation of a few critical monographs on the lines recommended by Sir John Russell and to begin with attention should be limited to four, *viz.* :—

(1) **Dry-farming.**

(2) **Rice Breeding.**

(3) **Rinderpest.**

(4) **Animal Nutrition.**

There are three possible methods of getting this work done, *viz.* :—

(1) by offering an honorarium to a senior worker *plus* a grant to his institution to enable him to be relieved of a considerable portion of his regular duties ;

(2) by obtaining the loan of a senior specialist for anything up to a year as a full time officer ; and

(3) by advertising for a young specialist who also would be a full time officer and who might need more editorial assistance.

Whichever method is adopted, some staff for clerical and compiling work will be needed and considerable expenditure would be involved ; no estimate is possible at this stage but it might easily run to say Rs. 15,000 for each monograph.

It was also agreed that each monograph should be in the form of a book, rather than in the form of a scientific memoir, and that it should include a good bibliography.

ANNEXURE II.

(EXTRACT FROM SIR JOHN RUSSELL'S REPORT.)

(Pages 5-6.)

The Second Stage—the Agricultural Experiment Stations.

* * * * * * *

In view of the fact that Indian experiment stations have been functioning for so many years it seems at first surprising that so little of the work done has found its way into the general body of agricultural science as expounded in the standard treatises. It is comparatively rare to find references to Indian investigations in books published outside India. Probably the chief reason is the widespread Indian practice of publishing the results in a large number of small communications, many of which are uncritical and unimportant having the character rather of journalism than of serious scientific literature. Research demands that a man should think long and carefully about it ; hurried and scrappy publication prevents him doing this. It would undoubtedly enhance the dignity and reputation of Indian science if the leaders would combine to stop this fragmentation, and encourage only the publication of serious critical papers where the work has been properly planned and the results fully considered. Good memoirs compel attention and gain recognition wherever and by whomsoever published.

2. There is a considerable amount of good work in this vast mass of publications and it would be unfortunate if it all passed into oblivion. The best way of saving it would be preparation of critical monographs, each by a specialist having thorough knowledge of his subject and able to assess the value of scientific evidence, summarising the results obtained, pointing out clearly where they differ from those recognised in the regular treatises and in what respects they represent advances in knowledge. These monographs would be of great value to teachers and to experimenters in

India, and if well prepared they would be taken seriously by all agricultural research institutes ; they would not only show what has been achieved in India but would also cause other stations to examine any discrepancies between the Indian results and their own.

(EXTRACT FROM SIR JOHN RUSSELL'S REPORT.)

Page 215.

* * * * * * *

Much of the rseearch in agricultural science done in India is not as widely known as it deserves to be and I recommend the preparation of a series of monographs by competent persons setting forth the results obtained by Indian workers and pointing out how they differ from those obtained elsewhere.

* * * * * * *

ANNEXURE III.

SCHEME FOR "PREPARATION OF A MONOGRAPH ON RINDERPEST IN INDIA" RECEIVED FROM THE DIRECTOR, IMPERIAL VETERINARY RESEARCH INSTITUTE, MUKTESWAR.

The Editorial Committee of the Imperial Council of Agricultural Research have recommended that the preparation of a critical monograph on Rinderpest in India should be taken up as early as possible and Mr. J. R. Haddow, B.Sc., M.R.C.V.S., D.V.S.M., I.V.S., Veterinary Research Officer in charge, Section of Serology, Imperial Veterinary Research Institute, Mukteswar, has been requested to prepare this monograph. It will not be possible, however, for this officer to prepare such a monograph within a reasonable period unless some assistance is given in the collection and examination of the various documents and reports relating to the work in hand which are in existence in various parts of India. It will also be necessary to review a considerable amount of the literature of other countries in order that the work done there may be compared with that done in India.

The staff suggested has been based on that required for the preparation of similar monographs and it is estimated that with this assistance the monograph should be ready for publication in approximately a year.

The technical assistant is required to tour and to collect throughout India reports and documents of importance, which are not available in the library of the Institute. He will also be required to make surveys of literature on certain aspects of the subject which need exhaustive examination. In addition to the Technical Assistant a typist will be required as the services of the Institute clerks are already fully engaged and will not be available for this purpose. It is also suggested that as the author and the technical assistant will have to tour a peon should be provided. It is anticipated that the Imperial Council of Agricultural Research will make the necessary arrangements with the provincial and state governments to provide facilities for collecting information on the subject.

Details of the expenditure which will be incurred in the preparation of the monograph are as follows :—

	Rs.
1. Pay of establishment—	
(*a*) Honorarium to the author	*1,250
(*b*) Highly qualified and experienced Technical Assistant at Rs. 200 per mensem for one year	2,400
(*c*) One Typist at Rs. 35 per mensem for a year ..	420
(*d*) One Peon at Rs. 15 per mensem for a year ..	180
Total ..	4,250
2. Travelling allowances	2,000
3. Contingencies	250
Total ..	6,500
4. Cost of preparing blocks and printing of illustrations for the Monograph	200
GRAND TOTAL ..	6,700

F. C. MINETT,
Director,
Imperial Veterinary Research Institute.

*Representing one month's salary. Most of the work involved would of necessity be during the author's spare time.

APPENDIX C.

Supplementary Note on Subject No. 39 (c) :—Scheme for the preparation of a critical monograph on ' Rinderpest in India '.

In continuation of paragraph 4 of the note, dated the 23rd October 1939, the attached statement showing the cost of preparation of similar monographs on ' Dry Farming in India ' and ' Animal Nutrition in India ', referred to therein, is circulated for information.

2. It will be seen from the statement that the cost of the monograph on ' Rinderpest in India ' has been prepared on the same lines as in the case of the other two monographs, except that in the present case, it is proposed to pay Mr. Haddow an honorarium of present case, it is proposed to pay Mr. Haddow an honorarium of Rs. 1,250 which is equivalent to one month's substantive pay of this officer. A Government servant may be permitted to receive an honorarium as remuneration for work performed which is occasional in character and either so lobourious or of such special merit as to justify a special reward. The following statement will show at a glance the rates of honorarium proposed for the different monograph :—

Monographs.	Writers.	Pay of Officers.	Honoraria proposed.
		Rs. Rs.	Rs.
1. Animal Nutrition ..	.. Dr. K. C. Sen	685+150 (S. P.)	500
2. Dry Farming ..	.. Mr. N. V. Kanitkar ..	960+ 75 (C. A.)	500
3. Rinderpest ..	.. Mr. J. R. Haddow .. £ 30 (O. P.)+100 (L. A.)	1,250+150 (S. P.) 130 (O.P.)+100 (L. A.)	1,250

To enable him to complete the work in a shorter time than would otherwise be possible, it is proposed to give Mr. Haddow assistance on the same scale as in the cases of Dr. K. C. Sen and Mr. Kanitkar.

STATEMENT.

Monograph on ' Dry Farming in India ' (approved by the Advisory Board held in May 1939 and by the *Governing* Body in July 1939).

1. *Pay.*	Rs.
(*a*) Honorarium to Mr. N. V. Kanitkar (His pay Rs. 960 + C. A. Rs. 75) for supervision, etc.	500
(*b*) Highly qualified technical assistant at Rs. 200 per mensem for one year (Rs. 200 × 12).	2,400
(*c*) One typist for 12 months at Rs. 35 per mensem (Rs. 35 × 12).	420
(*d*) One draftsman for 9 months at Rs. 35 per mensem (Rs. 35 × 9).	315
	3,635

Monograph on ' Animal Nutrition in India ' (submitted to the Advisory Board to be held on November 1939).

1. *Pay.*	Rs.
(*a*) Honorarium to Dr. K. C. Sen (His pay Rs. 685+S.P. Rs. 150).	500
(*b*) Highly qualified technical assistant at Rs. 200 per mensem for one year (Rs. 200 × 12).	2,400
(*c*) One typist for 12 months at Rs. 35 per mensem (Rs. 35 × 12).	420
(*d*) Part time services of an artist at Rs. 200 per mensem for *nine* months (Rs. 20 × 9).	180
(*e*) One peon at Rs. 15 per mensem for 12 months (Rs. 15 × 12).	180
	3,680

Monograph on 'Dry Farming in India' (approved by the Advisory Board held in May 1939 and by the Governing Body in July 1939).	Rs.	Monograph on 'Animal Nutrition in India' (submitted to the Advisory Board to be held on November 1939).	Rs.
2. *Conveyance allowance.*		2. *Travelling allowance.*	
(*a*) Conveyance allowance for the the technical assistant at Rs. 25 per mensem for motor cycle.	300	For visiting different places for collecting published and unpublished data.	1,500
(*b*) Conveyance allowance pedal cycle for the typist and draftsman at Rs. 3 per mensem each ($12\times3=$ Rs. $36+9\times3=$ Rs. 27).	63		
	363		
3. *Travelling allowance.*		3. *Contingencies.*	
For visiting experiment stations in other provinces to obtain first hand knowledge and to refer to libraries at Poona, Coimbatore, Delhi, etc.	1,500	Stationery, stamps and other sundry purchases.	250
4. *Contingencies.*			
Stationery, stamps and other purchases.	202	4. Cost of preparation of blocks and printing of illustrations for the monograph.	600
	5,700		6,030

APPENDIX CI.

Note on Subject No. 39 (d) :—Application from the Government of the Central Provinces ond Berar for a grant of Rs. 10,600 spread over 5 years for a scheme of investigation into the Diseases of Poultry.

At their meeting held in November 1937, the Advisory Board emphasised the fact, that under the present circumstances in India research into the diseases of poultry was more important than work on poultry breeding. They also observed that, in order to take full advantage of the Specialist Officer for research on poultry diseases at the Imperial Veterinary Research Institute, Izatnagar, and in view of the fact that it was not possible for the existing Veterinary Investigation Officers in the Provinces to undertake this work in addition to their already heavy duties, an additional investigation officer was needed in each Province and Constituent State for research work into the diseases of poultry.

2. The Provinces and States were accordingly asked to say what facilities they could provide for the purpose and invited to submit schemes, on the basis of contribution by them of half the estimated cost in respect of each scheme submitted. In response to this, schemes were received from the Governments of Madras, Bombay, the United Provinces, the North-West Frontier Province, Orissa and Bihar and were considered by the Advisory Board at their meetings held in November 1938 and May 1939. With a view to maintaining uniformity, the estimates of expenditure were recast and fixed at Rs. 21,200 for each scheme (*vide* Annexure I) spread over a period of five years—the Provincial Governments contributing 50 per cent. of the cost in each case.

3. The attached scheme (Annexure II) submitted by the Government of the Central Provinces and Berar is now for the consideration of the Advisory Board. A similar scheme submitted by the Government of the Punjab is also being referred to the Advisory Board separately. [*Vide* subject No. 39 (a)].

4. The scheme will be examined in the first instance by an appropriate Committee whose report will be circulated to the Advisory Board in due course.

ANNEXURE I.

(SUBJECTS NOS. 43, 44, 45, 61 AND 61-A OF THE AGENDA OF THE ADVISORY BOARD.)

Details of recurring expenditure.

Items.	I year.	II year.	III year.	IV year	V year.	Total.
	Rs.	Rs.	Rs.	Rs.	Rs.	Rs.
1. Pay of Veterinary Inspector in the scale of Rs. 150—10—200.	1,800	1,920	2,040	2,160	2,280	10,200
2. Peon (average taken as Rs. 14 per mensem).	168	168	168	168	168	840
3. Travelling allowance	1,200	1,200	1,200	1,200	1,200	6,000
4. Contingencies	1,600	600	600	600	600	4,000
Total ..	..	..	..	..	..	21,040
Tuition fee for training at Imperial Veterinary Research Institute, Muktesar.	150	..	..	..	..	150
Total ..	..	..	..	..	..	21,190 or 21,200

Total cost of the scheme for five years	21,200
Amount to be provided by the Imperial Council of Agricultural Research (50 per cent. contribution).	10,600

ANNEXURE II.

A SCHEME FOR INVESTIGATION OF POULTRY DISEASES IN THE CENTRAL PROVINCES AND BERAR.

* * * * * * *

The Central Provinces and Berar is fairly rich in poultry though the indigenous breeds are of very poor types both as regards table purposes and laying capacity. The poultry industry is mostly confined to low caste Hindus, the—aborigines and the poorer class of Mohemmadans. Except the Brahmins, almost all classes of the community consume eggs. Middle class people occasionally take to poultry rearing to supplement their income but men of small means are generally shy of putting capital into it because of the devastating effect of various pests and diseases.

The Central Provinces and Berar contains roughly 2.28 million fowls excluding ducks, geese, turkey, etc. According to the Marketing Officer the output of eggs is 107.3 millions a year. This figure includes only hens' eggs.

A scheme is being worked for the improvement of pultry breeds. A central poultry farm was started at Nagpur with a few branches in

the outlying districts. This farm was financed from the Government of India grant of Rs. 5,000 given for rural development. The department, since the opening of the farm, has been distributing cockerels in villages where controlled breeding centres have been established.

Progress in the poultry industry is not very substantial due to heavy mortality from deadly fowl pests. The estimated mortality is 45,60,000 which roughly comes to 20 per cent. of the total poultry population. Unless the various fowl pests can be controlled, sustained progress will be impossible. It is, therefore, proposed to institute a scheme for the investigation of diseases of pultry in this Province. The diseases proposed to be investigated are fowl cholera, Ranikет disease, fowl pox, deficiency diseases and certain unclassified diseases. The proposed scheme entails an expenditure of Rs. 21,200 spread over a period of five years. (Please see Annexure for particulars). The Imperial Council of Agricultural Research might be approached for a grant of Rs. 10,600 on the basis of 50 per cent. contribution.

The scheme is proposed to be worked under a poultry disease investigation officer who will be selected from the departmental staff. The main qualification for the post will be knowledge of bacteriology and a special aptitude for research work. In the first instance the officer selected will have to be deputed for a period of six month's training at Izatnagar Institute and the programme of work will be drawn up in consultation with the Director, Imperial Veterinary Research Institute. Ample laboratory facilities exist at Nagpur for research work and he will have the help and co-operation of the Veterinary Investigation Officer and the departmental staff.

Details of recurring expenditure.

Items.	I year.	II year.	III year.	IV year	V year.	Total.
	Rs.	Rs.	Rs.	Rs.	Rs.	Rs.
1. Pay of Veterinary Inspector in the scale of Rs. 150—10—200.	1,800	1,920	2,040	2,160	2,280	10,200
2. Peon (average taken as Rs. 14 per mensem).	168	168	168	168	168	840
3. Travelling allowance	1,200	1,200	1,200	1,200	1,200	6,000
4. Contingencies	1,600	600	600	600	600	4,000
Total ..	..	..	..	..	..	21,040
Tuition fee for training at Imperial Veterinary Research Institute, Muktesar.	150	..	..	..	..	150
Total ..	..	..	..	..	..	21,190 or 21,200

Total cost of the scheme for five years 21,200

Amount to be provided by the Imperial Council of Agricultural Research (50 per cent. contribution). 10,600

APPENDIX CII.

Note on Subject No. 39-I :—Effect of legislation in the Control of contagious cattle diseases with special preference to the working of the Central Provinces Cattle Diseases Act, 1934, by Rai Bahadur R. V. Pillai, Deputy Director of Veterinary Services, Central Provinces.

Field Veterinary Workers in India must have often felt the lack of proper legislation in order that control measures for contagious cattle diseases may be effectively carried out in their charge. The most effective means for such control is to restrict by legislation the interprovincial movements of infected cattle.

In an excellent note submitted by Mr. T. J. Hurley to the Third Animal Husbandry Wing Meeting, February 1939, the author dealt with the subject in relation to the conditions prevailing in the Madras Presidency.

From the discussion which followed it became apparent that an All India Cattle Disease Act may not meet the problem in view of the present constitutional relationship of the Provinces with the Central Government.

The present attempt is, therefore, to acquaint the Board with the conditions prevailing in the Central Provinces and the effects on the incidence of graver cattle diseases in the area in which the Central Provinces Cattle Diseases Act 1934 has been enforced.

It is estimated that approximately two hundred thousand cattle are brought into the Central Provinces annually from outside areas mainly to meet local demands.

The agriculturists of the Province do not breed a sufficiency of suitable cattle for the needs of the land. This is especially so in the rice tract of the Province where buffaloes are used for rice cultivation.

A small number is also imported for either Dairy purposes or for introducing special breeding stock. The latter is steadily decreasing in view of the organised efforts of the Animal Husbandry Department of the Province to lend breeding stock to Controlled Breeding Units.

The season for importation of these animals is between October and June although a very small number is brought in during the rainy months—July to September.

The herds are usually in charge of nomadic herdsmen who migrate with the herds until they complete their transactions and return home 3 or 4 months after.

The chief centres for them to migrate are a weekly cattle market or the more important cattle fairs which invariably assemble during the cold weather for a month to six weeks at a stretch. The tradesmen have a religious sanctity attached to these fairs. A feeling has been ingrained in the minds of the seller and the purchaser that transactions in such fairs would be beneficial to both parties ! Smaller sales are also effected in wayside villages during the course of their march with the herds. Unfortunately sales are effected either in the fairs or in the villages of animals incubating a contagious disease. Such animals pass hands

occasionally for less than flesh value and animals so purchased carry with them infection endangering their own life and to form nuclei for formidable outbreaks of contagious disease in the vicinity.

During the long and tedious march which these animals are subjected to for anything between 10 to 15 miles a day, a beast unable to move with the herd is left behind on the road side to succumb to an infection and become a fresh nucleus for outbreaks of contagious disease particularly Rinderpest. This is the problem which the field staff of the Department has had to tackle and more often than not it had been a cry of despair. The economic loss resulting from such unrestricted cattle trade would be colossal to the poorer cattle owners of the area. It is, therefore, plain that steps taken to control in any locality such unrestricted immigration of cattle by legislation would vouch for the local cattle owner his normal cattle wealth.

The Central Provinces Cattle Diseases Act was passed into Law in 1934. In normal circumstances the Act would have been enforced by the cold weather of 1935. But the untimely death of its sponsor the late Major R. F. Stirling, *Ex*-Director of Veterinary Services, Central Provinces and Berar, to whom all credit for such a beneficial measure is due, there was some delay in enforcing the Act which, however, was enforced as an experimental measure in two of the bordering districts of the Province in 1938.

Nine Cattle Quarantine Stations were established at strategical points by 1st December 1938. The routes through which cattle may enter the Province were prescribed and between 1st December 1938 and June 1939, 62,663 animals passed through these Quarantine Stations and after being observed for other scheduled diseases were compulsorily vaccinated against Rinderpest and marked in the manner prescribed. Of this number 32,629 were buffaloes and the remaining 30,034 other bovines.

As a preliminary to the enforcing of the Act, the cattle of villages within a radius of 5 miles along cattle trade routes were immunised by the Goat virus method.

The normal period of compulsory detention at a Quaratine Station is limited to 12 hours but the Quarantine Officers can detain cases for treatment upto 10 days.

A levy of 0-4-0 a head as inoculation and marking fees hardly meets the expenses involved but rendering migratory cattle immune to Rinderpest has been reflected on the incidence of and mortality from contagious diseases in the Province. Rinderpest, Hæmorrhagic Septicæmia, Black Quarter, Anthrax and Trypanosomiasis are alone scheduled under the Act for the present.

The Quarantine Stations are self-contained in every respect consisting of a stone built dispensary block, a goat stable and bleeding shed, two cattle enclosures, one isolation shed, two menials' block and an inoculation stock built in a 5 acre area of land enclosed by wire fencing. A Veterinary Assistant Surgeon, a Compounder and 3 menials form the staff.

Opinion is held by some field workers in India that buffaloes vaccinated with goat virus alone method show severe reaction and that during the reaction period they are capable of disseminating disease.

Although our experience in the Province is contrary to this suggestion, every possible precaution was taken in the initial stage to give confidence to the Cattle Owners on the efficacy of goat virus alone vaccination. For this purpose a mobile staff was employed stationed at convenient centres to follow up herds vaccinated at the Quarantine Stations during their enforced march. Instructions were issued that severe reactors during the march are to be treated by a suitable dose of Anti-serum, so that the effect of a serum simultaneous method of vaccination may be obtained. The herds were thus watched during their march for over a fortnight after the first vaccination and the proportion of severe reactors reported have not been more than 1 per cent. even in buffaloes and the percentage of deaths occurring was negligible. The fact that there had been no complaints made by any herdsmen on the ill effects of vaccination is sufficient proof that they had none to make. In fact owners who had previous experience of losses of their stock readily sought vaccination.

It cannot be said that by the opening of nine stations on a border line of over 500 miles, the evil has been completely eradicated. Knowing as we do, the temperament of cattle dealers, there had been evasions of the Act. In all, there had been 5 prosecutions and convictions, during the period, which is bound to have a moral effect on the Law breakers and which would pave the way for better working of the Act in subsequent years. At the same time we had been extremely careful to give the tradesmen the least amount of irritation so that the normal cattle trade, which is so essential for the Province, may not in any way be interfered with.

The restriction so placed on the ingress of infected cattle into the Province and the control measures adopted at the Quarantine Stations directly reflected on the incidence of contagious cattle diseases, particularly Rinderpest, in the area. The total number of reported outbreaks of Rinderpest in the districts of Hoshangabad and Saugor in which the Quarantine Stations are situated and Jubbulpore and Mandla through which the nomadic herds pass during their march to the Bilaspur district have been 571 from 1st April 1937 to 31st June 1938 when the Quarantine Stations were not working and 440 for the corresponding period of the succeeding year, during part of which the Quarantine Stations were working. These figures speak for themselves. When this work expands and we are able to hold up all migratory herds into the Province, the incidence of Rinderpest particularly and consequent mortality will, it is hoped, be substantially reduced.

It is needless to state here that effective quarantine of prospective herds of cattle which act as carriers of Rinderpest infection to clean herds and thereby nullify control measures adopted, is the natural outcome of the development of research at the Muktesar Institute originated by Dr. J. T. Edwards on "active immunisation of cattle against Rinderpest".

In the Annual Administration Report of the Army Veterinary Service in India, for 1937-38, the following passage occurs:—

"It is pleasant to record for the second year in succession that no outbreak of Rinderpest occurred among cattle of the Military Farms Department......There can be no doubt

> that the present policy of immunisation is responsible for this satisfactory state of affairs. .... Owing to the prevalence of Rinderpest among civilian cattle incessant vigilance is required to prevent outbreaks among cattle of the Military Farms Department, and it is fortunate that the policy of immunisation is proving so successful."

In an editorial comment on the above in the Veterinary Record, London, of January 14, 1939, the writer states :

> "The resulting transformation in policy has produced an almost complete change in the routine work of the Veterinary Services in India and wholly altered the outlook in that country regarding Rinderpest. For, it was mainly the imminence of this scourage that had gravely hampered rational cattle-breeding and produced the widespread grave deterioration in the livestock of the country. In skilled veterinary hands in the field in India, the disease now becomes a problem that calls, not for temporisation, but for complete solution."

Such complete solution is only possible with legislative enactments of the type suggested in this note.

I would, therefore, urge on this Council the necessity of taking up this question in earnest so that the progress of Animal Husbandry Work of all types may not be retarded.

APPENDIX CIII.

Note on Subject No. 40-I :—Application from the Government of Bengal for a supplementary grant of Rs. 5,840 in connection with the Scheme for Animal Nutrition Work in Bengal.

Attention is invited to the attached scheme received from the Government of Bengal for a small supplementary grant of Rs. 5,840 in connection with the scheme for Animal Nutrition Work at Dacca.

2. It has been explained in the scheme that at their meeting held in May 1931 the Governing Body of the Council approved of the recommendation of the Advisory Board, regarding the scheme for the appointment of a Physiological Chemist to study animal nutrition problems at Dacca for a period of five years at a cost not exceeding Rs. 47,390 to the Council. The scheme started work on 2nd January 1932. In view of an increase in the volume of the work involving the taking up of cognate issues, the Governing Body approved of a supplementary grant of Rs. 15,570 for the employment of two additional assistants for a period of two years. With reference to the recommendation of the Advisory Board at their meeting held in February 1936, the Governing Body approved of the extension of the scheme for a further period of five years from 1st January 1937 at a cost not exceeding Rs. 71,700.

3. For the reasons stated in the attached scheme (Enclosure) the Bengal Government now ask for a supplementary grant of Rs. 5,840 mainly for the employment of two junior Assistants and one Byre Assistant for a period of two years from 2nd January 1940. The estimate for Rs. 3,920 shown in the scheme does noe seem to be correct as it includes the pay of one assistant only and not for two as proposed. It is stated in this connection that the Bengal Government sought permission in March 1939 for the employment of an analytical assistant on Rs. 70 for a period of one year, with effect from 1st April 1939. This has been sanctioned by the Vice-Chairman, Imperial Council of Agricultural Research under Bye-law 7 of the Bye-laws of the Council, subject to the condition that the expenditure on account of appointment would be met from the total sanctioned grant.

4. The scheme will be examined in the first instance by the appropriate Committee whose report will be circulated in due course.

ENCLOSURE.

PROPOSAL FOR A SMALL SUPPLEMENTARY GRANT FOR THE ANIMAL NUTRITION SECTION, BENGAL.

In 1932, the Imperial Council of Agricultural Research provided a five years' grant for one Physiological Chemist and one Assistant Chemist with two Byre Overseers to study the problem of animal nutrition as affecting the eastern side of Northern India. At the time of the submission of the scheme, Dr. Warth, then Imperial Physiological Chemist, had remarked that the problem of animal nutrition of these parts has aspects which from the standpoints of climate, geographical situation, etc., are quite "unique in India" and a careful study of them was "vital not only to North-East India but to India as a

whole." The work so far conducted also yielded results which fully came up to expectation. This is not the place to give the details of the work. They have been duly submitted in the annual reports as well as in the publications of the "Indian Journal of Veterinary Science" and "Agriculture and Live Stock in India." It needs, however, to be stated here that the works have been well received and appreciated as can be judged from the reports of the Proceedings of the Imperial Council (enclosures A and B). The scheme came into effect from the 2nd January 1932. In view of increased work and development of side issues the Imperial Council were pleased to make a supplementary grant for additional two assistants and certain equipments. On the termination of the first five years the scheme received an extension of another five years, but the supplementary grant terminated after the lapse of two years. The extension scheme, therefore, stands virtually on its original basis ; and two years and few months have elapsed since the extension was sanctioned. Under its present term it will last till the 1st January 1942 or for a period of another two years and odd months.

It should be noted that the Bengal Animal Nutrition Section has been responsible to initiate work which has been as much of theoretical interest as of practical value. On the theoretical side the new method of direct estimation of digestibility co-efficients has elicited appreciative interest both from India and abroad. A more or less thorough investigation has revealed that Rice straw possesses certain marked features bearing on the assimilation of lime, phosphorus and potash. India has about 81 million acres under rice, of which about 23 million acres are in Bengal. The Rice straw is thus a staple fodder of a large part of the peninsula. A very large potash ingestion, however, follow the feeding of this straw, but in spite of it a possitive balance is not assured. When fed with linseed cake the results are more satisfactory, but when fed with mustard cake the balance figures are largely negative. The phosphorus assimilation is also better under the former than under the latter. The work on Napier grass, guinea grass and water-hyacinth has also yielded valuable results.

From the very outset the aim of the section has been to undertake work on a statistical basis for which a regular team work is the primary condition. But since the termination of supplementary grant this important type of work has received a serious setback. Even difficulty is felt to take up urgent investigation arising from important side issues. Recent preliminary investigations on some of the rice by-products have shown that they constitute a highly useful yet cheap source of cattle food which is available all over India. There are also certain characteristic features in some of them. Thus some of the mill by-products contain as much as 20 per cent. oil and 6 per cent. phosphate. Depending on the nature of milling the components also fluctuate enormously. Besides the phosphorus is in a form in which it requires some treatment before it can be profitably fed. For this purpose careful investigation under chemical control is needed. It cannot be expected that such work could reach definite conclusion in course of a single year.

It should further be noted that though extensive trial designed on a statistical basis is now much restricted, some work carried out under

the previous condition of larger staff was recently released for publication. This refers to the lime requirement of adult animals and involve as many as thirty-six individual tests covering a long period. The work has elicited appreciative reference from the specialist referee of the Imperial Council of Agricultural Research, but the following remark of the specialist referee merits very careful consideration : " As far as it goes the paper is sound, but I suggest that the work might conveniently be extended........to embrace a wider set of dietary conditions.......... I feel that the subject lends itself to further work and an amplification to a wider range." [I.C.A.R. No. F. 3 (3215)-38-Pub., dated the 13th December 1938]. A statement to a similar effect has also been stressed in another communication. It goes without saying that the value of such work transcends beyond the narrow confines of one province. At the same time such work cannot be undertaken without a suitable team organisation.

It may be argued that such work can be undertaken at the centre. There is no doubt about it, but the staff there have their hands quite full. Their own work produces problems which leave them little time to take up investigation arising at other places. It is thus out of the question for them to divert their attention from their own respective spheres. On the other hand those who have already been engaged in a particular sphere are expected to use their previous experience in a more profitable way. The work at Dacca certainly shows a special aptitude on the part of the workers for such types of work, and the Royal Commission on Indian Agriculture have also stressed that " full advantage should be taken " of such aptitude.

It should further be noted that when the Imperial Council have already provided a large grant for the scheme in force, a small addition to the same will not involve a large expenditure, yet it will provide the scope for a considerably larger output of work both in quality and quantity. From this standpoint it will serve a real purpose of economy ; and it is earnestly hoped that the council would be pleased to sanction it.

The present proposal is for two junior assistants on a fixed pay of Rs. 80 each and one Byre assistant for night duty and clerical work. The junior assistants will be chiefly engaged for analytical work. It is strongly felt that during the period of test a responsible man on night duty is indispensable both for general supervision as well as for recording such work as frequencies of voidings, noting their amount and so forth. Besides a good deal of office routine at present devolves on the Physiological Chemist much to the detriment of his own work. The new Byre assistant will take up these duties thereby relieving the Physiological Chemist to devote attention to his own. The travelling allowance is needed for collecting samples of rice by-products from different mills and localities and also for conducting experiments at Krishnagar. The grant under books and periodicals is a great necessity for ready references.

If these suggestions are accepted it is proposed that the post of a junior assistant for which a separate proposal was submitted some time ago, may be merged with one of the above posts when the latter come

into effect. The scheme is to be adjunct to the parent scheme already in force and will run for the period the latter remains.

The expenses involved are as follows :—

	Rs.
Two junior assistants on fixed pay of Rs. 80 each for a period of two years from 2nd January 1940 to 1st January 1942	1,920
One Byre assistant for night duty as well as clerical work at Rs. 50 for two years ..	1,200
Travelling allowances	500
Books and periodicals	300
Total ..	3,920

In the original scheme the local Government have accepted the liability for Rs. 24,500. In the proposed scheme the share of expenditure of the local Government will be as follows :—

	Rs.
Purchase of eight animals at Rs. 50 ..	400
Purchase of straw at Rs. 400 per year ..	800
Purchase of cake and other concentrates at Rs. 300 per year	600
Chemicals and apparatus approximately ..	500
Labour charges at Rs. 50 for each metabolic test, for 10 tests	500
Total ..	2,800

The expenditure of the local Government for gas, water, electricity, laboratory facilities, etc., are not included in the above.

ENCLOSURE A.

EXTRCTS FROM THE PROCEEDINGS OF THE ANIMAL NUTRITION COMMITTEE OF THE IMPERIAL COUNCIL OF AGRICULTURAL RESEARCH, DATED THE 14TH JULY 1936.

* * * * * * *

Annual Report for 1935-36 of the scheme for the study of animal nutrition problems in Bengal (subject No. 17 of the agenda).

Dr. Sen remarked that the report was particularly valuable in regard to the new method for the estimation of digestibilities on a statistical basis which had been worked out. He drew attention to Dr. Warth's remarks in Appendix I, *viz.*, "I think it is one of the very best bits of work that has been carried out on digestion not merely in India but anywhere." He, however, suggested that as it was proposed to adopt it in this country copies of the report should be sent to Dr. Fisher and to Cambridge and Aberdeen to ascertain how far the statistical basis of method were correct. Rao Bahadur Viswanath

considered this unnecessary and after discussion it was agreed that such a reference was hardly needed in view of the fact that the method had now been published and would be criticised by other workers. What was most needed was practical application of it in research institutes in this country on a wide scale to determine its practical applicability. The Chairman observed that this scheme has led to valuable results and that its extension had already been recommended.

ENCLOSURE B.

COPY OF THE PROCEEDINGS OF THE MEETING OF THE STANDING ANIMAL NUTRITION COMMITTEE OF THE IMPERIAL COUNCIL OF AGRICULTURAL RESEARCH HELD IN NEW DELHI ON THE 8TH NOVEMBER 1937.

Annual report for the scheme for the extension of Animal Nutrition Work at Dacca for the 1936-37 (subject No. 4c. on the agenda of the Advisory Board).

This report gives a full description of the work that had been carried out during the year under report and the Committee agreed that the last year's working had produced further valuable information concerning the feeding value of fodders commonly used in Bengal and on other matters.

APPENDIX C. IV.

Note on Subject No. 41 (a) :—Application from the Government of the Punjab for a grant of Rs. 5,800 for a period of three years to study the nutritional requirement of milch cattle.

At their meeting held in November 1933 the Governing Body approved of a scheme, submitted by Dr. P. E. Lander, for determining the feeding values of certain food grains, oil-seeds and oil-cakes for working bullocks and dairy cattle. Subsequently, however, the Governing Body decided, at their meeting held in December, 1937, that the scheme should be financed for a period of 3 years only at a total cost of Rs. 22,840. Consequently it was decided to drop work on dairy cattle and carry out work on heifers only.

2. The attached scheme from Government of the Punjab (Annexure) is designed to extend this line of investigation to milch cows now. The scheme involves an expenditure to the Council of Rs. 5,800 spread over a period of three years. The Government of the Punjab will provide the necessary staff for conducting these experiments and also erect necessary feeding stalls to accommodate the milch cows.

3. The subject will, in the first instance, be considered by the Nutrition Committee and their recommendations will be submitted for the consideration of the Advisory Board in due course.

ANNEXURE.

SCHEME FOR A STUDY OF THE NUTRITIONAL REQUIREMENTS OF MILCH COWS.

The Punjab Agricultural Department has been carrying out a number of feeding trials on dry live stock, such as bullocks and heifers, in order to obtain fundamental data on the nutritional values of the common concentrated cattle foods, like gram, and roughages, *viz.,* bhoosa and hay. There are, however, no data to indicate the most suitable and most economical mixtures of such foods for the production of milk. Experiments of this nature have been and are being carried out in other countries and whilst the general scientific principles and objects may be similar to those in view for this province, yet conditions differ from country to country and specific data in regard to feeding milch cows in the United States of America or Europe cannot necessarily be applied exactly in the Punjab. The analytical data, to begin with, may be different, the response of the animal to the feed may be different and then again there are specific problems which must be worked out to suit local agricultural and economic conditions.

The need for such experiments has also been stresesd by Dr. Wright. Further, the Joint Committee, of the Advisory Board and Governing Body of the Imperial Council of Agricultural Research which met in July, 1938, while adopting his recommendation that experiments are needed to determine the relative value of various fodder crops on milk production and their effect on soil fertility, expressed the opinion that the Imperial Council of Agricultural Research should consider applications for grants for experiments under this recommendation.

Experiments for determining the value of various food grains, oilseeds and oilseed cakes as feeds for dry heifers are being carried out by the Punjab Agricultural Department at Lyallpur since April, 1939, with the aid of a grant of Rs. 22,840 from the Imperial Council of Agricultural Research spread over a period of three years. It is proposed to extend these investigations on a modest scale to milch cows, in order to study their nutritional requirements and for this purpose it is requested that a sum of Rs. 5,800 (non-recurring Rs. 1,150 and recurring Rs. 1,550 per annum) spread over a period of three years,—*vide* the attached statement —be sanctioned by the Imperial Council of Agricultural Research. In addition to providing the necessary staff for conducting these experiments the Punjab Government will erect the necessary feeding stall to accommodate the milch cows.

Statement showing the expenditure involved on the Scheme for a study of the nutritional requirements of milch cows.

—	Recurring.	Non-recurring.
	Rs.	Rs.
1. Purchase of 6 milch cows	..	800
2. Purchase of one bull	..	350
3. Dry roughages, green fodders and concentrates for animals ..	1,250	..
4. Harness for cows and other contingencies	300	..
Total for the 1st year	1,550	1,150
Total for the 2nd year	1,550	..
Total for the 3rd year	1,550	..
Total for three years	4,650	1,150

APPENDIX C. V.

Note on Subject No. 41 (b) :—Application from the Director, Imperial Veterinary Research Institute, Mukteswar, for a grant of Rs. 53,000 for a period of 5 years for the inclusion of Milch Cows in the Molasses Nutrition Scheme.

While considering the report of feeding trials conducted at certain nutrition centres under the scheme for the manufacture of cattle feed from molasses, the Standing Animal Nutrition Committee recommended that the Director, Imperial Veterinary Research Institute, be requested to prepare a scheme on a standard and co-ordinated basis for the continuation of experiments on feeding value of molasses to cattle. This recommendation was approved by the Advisory Board at its meeting held in November 1938. In pursuance of this recommendation, the Director, Imperial Veterinary Research Institute, submitted a scheme (Enclosure I), which was considered by the Advisory Board in May 1939. The scheme as approved by the Advisory Board and the Governing Body involves an expenditure of Rs. 54,965 for 5 years, *vide* details attached (Enclosure II).

2. While considering the scheme mentioned above the Animal Husbandry Committee and the Advisory Board recommended that the Director, Imperial Veterinary Research Institute be requested to submit a supplementary scheme also to include work on milch cows and young stock and that this supplementary scheme should run concurrently with the main scheme. The Director, Imperial Veterinary Research Institute has accordingly submitted the attached scheme (Enclosure III) for the consideration of the Advisory Board. The scheme involves an expenditure of Rs. 53,000 spread over a period of 5 years.

3. The scheme will, in the first instance, be considered by the Animal Nutrition Committee and its recommendations will be submitted for the consideration of the Advisory Board in due course.

ENCLOSURE I.

SCHEME FOR INVESTIGATING THE FEEDING VALUE OF MOLASSES TO CATTLE

Introduction.

The Imperial Institute of Sugar Technology has, for sometime past, been preparing some cattle feed from molasses mixed with bagasse and either grain or cakes, and these feeds were supplied to various nutrition centres for feeding trials. The experimental results so far available point to the fact that some of these molasscuits have considerable feeding value, but as the trials at different centres were not conducted on an uniform procedure, it is difficult to interpret the results properly. In view of these difficulties the Imperial Council of Agricultural Research has requested the Director, Imperial Veterinary Research Institute to—

(a) prepare a scheme in a standard and co-ordinated basis for the continuation of the experiments on the feeding of molasses to cattle

(*b*) and investigate the following :—

(*i*) As to whether molasses has any deleterious effect on the health of the animals.

(*ii*) As to whether molasses can be fed with benefit to cattle.

(*iii*) Should it be regarded as (*a*) an addition to the present ration, (*b*) a substitute for a particular diet, (*c*) or a partial substitute.

It may be mentioned here that the word "Molasses" has been used in a general sense. The actual substance to be tried is the feed which is being manufactured by the Institute of Sugar Technology which originally prepared this by incorporating molasses with bagasse and concentrate but is now making molasscuit containing two parts of molasses and one part of finely screened bagasse.

The present scheme is intended to answer the specific queries raised by the Imperial Council of Agricultural Research, firstly, through conducting experiments by feeding molasscuit to stock under village conditions of feeding, *i.e.*, incorporating molasscuit in a typical ration which the average villager in the United Provinces can provide for his animals and secondly by feeding molasscuit to stock receiving a balanced ration usually available in a well managed farm.

Before proceeding further it is desirable to point out that in any scheme for feeding molasses to livestock, the chemical characteristics of this substance as a feed which will influence the metabolic processes after ingestion should be properly considered.

The available data point out that a pound of molasses (pure) contains—

Total dry matter	0·74 lb.
Total digestible nutrients	0·57 „
Digestible protein	0·01 „
Ash	42·3 gm.
Calcium	2·7 „
Phosphorus	0·7 „
Potash	12·0 „

Molasses is therefore pre-eminently a carbohydrate concentrate, and like its energy content, the amount of ash is high and is very ill-proportioned so far as the important minerals like calcium and phosphorus are concerned. The very high potash content is another disturbing factor. Further, the process of treatment in the clarification of cane juice in factories may influence the inorganic composition of the resulting molasses. In fact, there is every likelihood that the sulphitation process may leave sulphur-containing residues in molasses which will not only affect the palatability of molasses as a feed, but may also prove toxic when fed in large quantities.

When bagasse is incorporated with molasses in the proportion of 1 : 2, the composition of the resulting molasscuits will not be significantly altered from that of molasses alone. The following are the analytical figures for

the molasscuits manufactured by the Cawnpore Institute. A pound of molasscuit contains—

Total dry matter	0·90 lb.	(Average).
Fibre	0·14 „	„
Nitrogen-fare-extractives	0·62 „	„
Protein	0·03 „	„
Crude fat	0·01 „	„
Ash	45 gm.	

(The above data has been supplied by the Director, Imperial Institute of Sugar Technology, Cawnpore.)

From the above theoretical considerations, because of its basic chemical nature, molasscuit cannot be considered a safe food for milch cattle or for growing stock if given indiscriminately in considerable amounts. Whereas the energy moiety of the ration is indisputably the most important factor in the performance of work, molasscuit can form quantitatively an ideal energy supplying constituent in the ration of adult working bullocks. The present scheme therefore concerns the possibilities of feeding molasscuit to working bullocks only.

The requirement for protein during work is a controversial subject. Although it is commonly believed that extra protein is not necessary for work production, some authorities feel that the nutritive ratio 1 : 10 should be retained during the working period to enable efficient utilization of energy for work. Working horses have been kept in satisfactory condition for a time on a nutritive ratio as wide as 1 : 20 to 30, but no experimental evidence is available to show that such ratios interfere with the efficient utilization of energy or bring about metabolic disorder in the long run. As the digestible protein content in molasscuit is negligible, inclusion of molasscuit in the ration as a supplement will inevitably widen the nutritive ratio.

The active phosphorus metabolism which occurs during muscular activity has directed attention to the question of an increased requirement of this mineral during work. Attention has already been drawn to the calcium and phosphorus content of molasses. It is not only low in phosphorus but also the proportion of calcium and phosphorus is far from the ideal physiological ratio. If molasscuit forms a substantial quota of a ration, the effect of its high calcium content, wide Ca/P ratio and highly basic ash on the Ca-P metabolism deserve careful attention.

A.—*Feeding molasscuit to working bullocks as a supplement to a ration under the village condition of feeding.*

Several enquiries made amongst local villagers, as regards their feeding practice and the working hours of their bullocks, have revealed that during the greater number of days in the year when the animals are confined to carting work alone, the feed generally consists of a mixture of 6 lb. of wheat bhoosa + 4 lb. of gram husk thoroughly kneaded with water and 2 lb. of mustard cake (soaked overnight) and a dry roughage fed *ad lib*—(according to villager's estimate the animals never eat more than

10 to 12 lb.). The working hours during the easy season generally vary between 4 to 6 hours. During the busy season however when the animals generally work about 8 hours, the ration is enriched by the addition of about 2 lb. of gram. If one analyses these rations in the light of the standard nutrient requirement, as prescribed by authorities like Kellner, Morrison and Brody, the following inferences can be drawn. According to these authorities, for an animal of 800 lb. live weight, doing medium work, the ration should supply on an average 9·6 lb. total digestible nutrients, 0·88 lb. digestible protein and 8·6 lb. of starch equivalent ; for heavy work, the requirement of the three items are 11·4 lb., 1·20 lb. and 10·5 lb., respectively. The total dry matter of the feed should not conveniently exceed 22 lb., as, a heavy load in the stomach diminishes the efficiency of work. Moreover a lot of coarse fodder requires a longer time for consumption and rumination and also a greater amount of energy is wasted in its digestion. On this basis, the villager's ration for his working animals during the easy season supplies about 4|5th of the total energy necessary. The digestible protein requirements falls short by 1|3rd of the actual requirement. During the busy season, inspite of the reinforcement of 2 lb. of gram in the feed, the ration, remains deficient and falls short of the scientific requirement of the nutrients, practically to the same extent as during the easy season.

As it is definitely accepted that the higher energy requirement is indispensable during work in the 'village' ration, therefore, molasscuit can be profitably supplemented to contribute a part or the whole of the balance of about 1·8 lb. of starch equivalent. Morrison estimates the approximate energy value of a pound of molasses to be 0·5 lb. of starch equivalent. One can safely accept that the value of starch equivalent of bagasse should be at least a fifth of the same amount of molasses. A pound of molasses with its combined 0·5 lb. of bagasse, therefore will meet about 30 per cent. of the deficiency of 1·8 lb. of S. E. in a 'village' ration.

To answer whether molasscuit could be fed to cattle with benefit one can tentatively suggest, subject of-course to actual biological test, that such a low amount of molasscuit as 0·75 lb. (containing 0·5 lb. of molasses) can meet 15 per cent. of the energy deficiency. The maximum amount of molasscuit necessary to make good 100 per cent. of the energy deficiency will be about 4·5 lb. (containing 3 lb. of molasses).

The mixed ration containing molasses can then be compared to the 'village' ration containing no molasses and also to a properly balanced feed which has been further supplemented by the same amount of molasscuit.

The nutritive ratio of the 'village' ration is about 1 : 17, which is rather a wide ratio. The ratio if further widened to about 1 : 20 when molasscuit is supplemented in such amount as to meet 100 per cent. of its energy deficiency. Further, an amount of molasscuit over 3 lb. introduces a large amount of ill-proportioned ash, which causes considerable imbalance in the lime-phosphorus content of the 'village' ration. One experiment should therefore be undertaken to study the effect of molasscuit-containing village feed, in which the proper nutritive ratio has been established by replacing the whole of the mustard cake by protein-rich ground-nut cake. The other experiment, which should also be undertaken is to study the

effect of molasscuit-containing 'village' feed, in which the lime-phosphorus imbalance has been rectified by *adding a small amount of phosphorus-rich* wheat bran.

B.—*Feeding molasscuit as a substitute for equicaloric carbohydrate portion of a balanced ration.*

As the molasscuit can be obtained cheap (about 5 annas per maund), it is worth while to undertake a systematic investigation to study if and how much of the energy, as represented by the carbohydrate part of a balanced ration, can be replaced by molasscuit. The chemical nature of molasscuit unfortunately stands against any large replacement, nevertheless enough of it can be substituted without trangressing the principles of scientific feeding, at the same time bearing definite economic possibilities.

The plan of investigation.

In planning the investigation an endeavour has been made to see that the projected experiments should elucidate the following aspects of the problem of feeding molasscuit to working bullocks.

(*a*) By *adding* graded doses to ascertain what is minimum and maximum amount of molasscuit that can be fed with benefit.

(*b*) Whether improvement of the existing ration will give better results even when molasscuit is added in maximum amount.

(*c*) By *substituting* graded doses, what minimum and maximum amount of molasscuit can be fed with benefit.

(*d*) By spreading out the feeding experiment for a sufficiently long period what will be the effect of season when molasscuit is added or substituted in a ration, and what will be the toxic effect.

With the above points in view, the following are the experiments proposed to be undertaken.

EXPERIMENT No. 1.

In this experiment it is intended to study the effect by feeding a village ration supplemented by 0·75 lb. of molasscuit. This amount may be considered the smallest quantity that can be supplemented with some economic benefit. A typical village ration for a bullock of 800 lb. live weight and doing medium work is :—

Ration.		Nutrients in the ration.	
(1) Mixture—			
Wheat bhoosa	6 lb.	Total digestible nutrients ..	10·0 lb.
Gram husk	4 lb.	Digestible protein	0·56 lb.
Mustard cake	2 lb.	Starch equivalent	6·6 lb.
(2) Wheat bhoosa	*ad lib.*	Nutritive ratio	1:17
		Total dry matter ..	22 lb.

To test the feed, 8 animals will be divided into 2 groups, 4 in each. The grouping will be so made that one animal of the first group will have a mate in the second group, of the same age and live weight. The animals of one group will receive the control feed, *viz.*, 'village' ration, the other

group the supplemented ration, *viz.*, 'village' feed + 0·75 lb. of molasscuit + 1 oz of salt. The experiment will be spread over for a period of 42 weeks, during which following records will be maintained :—

(*a*) Total food consumption.

(*b*) Weekly live weight.

(*c*) General condition and health.

(*d*) Inclination for work.

Towards the end of the period detailed metabolism studies will be made to assess—

(*a*) Digestibility of the nutrients in the feed.

(*b*) Protein balance and the trend of protein catabolism by nitrogen partition of the urine.

(*c*) Mineral balance.

EXPERIMENT No. 2.

The same as the experiment No. 1 but by supplementing 1·5 lb. of molasscuit.

EXPERIMENT No. 3.

The same as the experiment No. 1 but by supplementing 3·0 lb. of molasscuit.

EXPERIMENT No. 4.

The same as experiment No. 1 but by supplementing 4·5 lb. of molasscuit.

EXPERIMENT No. 5.

The same as experiment No. 4 but by supplementing 0·5 lb. of wheat bran in addition to molasscuit.

EXPERIMENT No. 6.

The same as the experiment No. 5 but by replacing mustard cake by the same quantity of ground-nut cake.

EXPERIMENT No. 7.

In this experiment it is intended to study the effect by feeding a balanced ration supplemented by 0·75 of molasscuit. A typical balanced ration for a bullock of 800 lb. live weight and doing medium work :—

Ration.			Nutrients in the ration.	
(1) *Izatnagar farm* Mixture No. 2—				
Wheat bran	.. 100 parts	lb. 6·5		
Gram ..	.. 300 ,,		Total digestible Nutrients	.. 10·8 lb.
Mustard cake	.. 500 ,,		Digestible protein ..	.. 0·90 lb.
Indian Corn	.. 340 ,,			
Ardawa ..	.. 340 ,,			
Salt ..	.. 14		Starch equivalent ..	.. 8·5 lb.
(2) Gram Husk	.. 4 lb.		Nutritive ratio ..	.. 1:10
(3) Wheat bhoosa	.. 12 ,,		Total dry matter ..	.. 22·5 lb.

The procedure of the experiment however will be the same as that of the Experiment No. 1.

EXPERIMENT No. 8.

In this experiment it is intended to test the effect by feeding a balanced ration in which 2·50 lb. of gram husk has been replaced by 3·0 lb. of molasscuit. The procedure of the experiment will be the same as that of the Experiment No. 1.

EXPERIMENT No. 9.

The same as experiment No. 8 but by replacing 4 lb. of gram husk by 4·5 lb. of molasscuit.

It is hoped that the foregoing series of experiments from 1 to 9 will indicate the maximum quantity of molasscuit which can be fed—(*a*) by adding molasscuit to a deficient 'village' ration, (*b*) by substituting molasscuit for a part of the comparatively costlier feed of an adequate and balanced ration. Furthermore, these experiments will indicate whether the maximum amount of molasscuit, when fed by either of the methods or both, lead to any economic benefit in feeding, which is compatible with the physical well-being of the animals as also efficiency of performance of work by the animals. Any toxic effect of feeding molasscuits will also be detected.

To confirm the salient features of these preliminary experiments, further long term experiments (for two years) should be undertaken with two of the most promising results of the previous experiments. One of these will represent the best method of addition of molasscuit to a deficient ration. The other will represent the best method of substitution of molasscuit in an adequate and scientifically balanced ration. The general procedure of the experiment will be exactly the same as in the previous ones. The number of animals in the experiments should however be increased to 16, 8 animals in each group. The duration of the experiments will be 42 weeks for each. Further, two sets of metabolism studies will be made, one at the middle, the other towards the end of the experiments.

It may be worthwhile here to suggest how the work of the experimental animals will be best planned. With the Izatnagar conditions in the background as regards weather and local farm practices, it may be possible to introduce two types of work, *viz.*, ploughing and carting. The energy expenditure for both types of work may be considered more or less the same. The work of the experimental animals will be of medium type, *i.e.*, 6 hours a day, since this represents the usual duration of work during the greater number of days in a year both for village as well as for organised farm working stock. The animals can work from 7 A.M. to 11 A.M. and again from 2-30 P.M. to 4-30 P.M. during summer months, and from 8 A.M. to 12 noon and again from 2 P.M. to 4 P.M. during winter months. In order to make the work even and strictly comparable the pairmates of each yoke should be as far as possible identical as regards age and live weight.

During the confirmatory part of the investigation in each yoke, the pair will be so chosen that the two individuals should represent one from each group, *i.e.*, one animal of the pair having the experimental ration, the other having the control ration.

The duration and programme of work.

The investigation will be completed in 5 years. The maximum number of animals that can be conveniently handled at a time will be 16. The experimental tests will be arranged according to the following programme.

1st year.

Group 0 (control) receiving village ration.

Group 1 receiving village ration + 0·75 lb. molasscuit.

Group 2 receiving village ration + 1·5 molasscuit.

Group 3 receiving village ration + 3·0 lb. molasscuit.

2nd year.

Group 0 (control) receiving village ration.

Group 1 receiving village ration +4·5 lb. of molasscuit.

Group 2 receiving village ration + 4·5 lb. of molasscuit.
+ 0·5 lb. wheat bran.

Group 3. The same as group 2, but the mustard cake is replaced by equivalent amount of ground-nut cake.

3rd year.

Group 0 (control) receiving balanced ration.

Group 1 receiving balanced ration + 1·5 lb. of molasscuit.

Group 2 receiving the balanced ration in which 2·5 lb. of gram husk is replaced by 3 lb. of molasscuit.

Group 3 receiving the balanced ration in which 4·0 lb. of gram husk is replaced by 4·5 lb. of molasscuit.

4th year and 5th year.

Confirmatory experiments with (*a*) the best method of supplementing molasscuit, (*b*) the best method of substituting molasscuit.

In calculating the expenditure it is taken for granted that the molasscuit will be supplied without cost. The total amount of molasscuit that will be reuired for the investigation is about :

	lb.	
	6,200	first year.
	16,000	2nd year.
	10,700	3rd year.
	10,700	4th year.
	10,700	5th year.
Total	54,300	

or total about 24·3 tons.

Expenditure Statement.

Serial No.	Items.	1st year.	2nd year.	3rd year.	4th year.	5th year
		Rs.	Rs.	Rs.	Rs.	Rs.
1	Pay of one class II Officer (including leave salary) @ Rs. 200—15—350 (Efficiency Bar)—20—650	2,600	2,795	2,990	3,185	3,380
2	Pay of one Assistant (including leave salary) @ Rs. 100—5—150—(Efficiency Bar)—5—200	1,300	1,365	1,430	1,495	1,560
3	Pay of Farm Overseer (including leave salary) @ Rs. 70—3—100	910	949	988	1,027	1,066
4	Pay of one Laboratory Assistant (including leave salary) @ Rs. 35—2—85 ..	455	481	507	533	559
5	Pay of one Laboratory Subordinate (including leave salary) @ Rs. 19—1—23 ..	228	240	252	264	276
6	Pay of one Laboratory Subordinate (including leave salary) @ Rs. 14—1—18 ..	168	180	192	204	216
7	Pay of nine gwallas @ Rs. 10-8-0 p.m. each	1,134	1,134	1,134	1,134	1,134
8	Cost of 16 animals	2,000	..	..	..	..
9	Cost of feeding above animals approximately	2,500	2,500	2,500	2,500	2,500
10	Extra gwalla labour during metabolism experiment	200	200	200	200	200
11	Recurring expenses for chemicals and fragile, apparatus etc.	800	300	300	300	300
12	Non-recurring expenses for metabolism and feeding equipment, etc.	500	..	..	..	..
13	Contingencies spread over 5 years ..	1,500	..	..	..	..
	Total	14,295	10,144	10,493	10,842	11,191 =56,955

ENCLOSURE II.

STATEMENT OF EXPENDITURE FOR THE SCHEME FOR INVESTIGATING THE FEEDING VALUE OF MOLASSES TO CATTLE.

Serial No.	Items.	1st year.	2nd year.	3rd year.	4th year.	5th year.
		Rs.	Rs.	Rs.	Rs.	Rs.
1	Pay of one class II Officer (including leave salary) @ Rs. 200—15—350—(E. B.)—20—650	2,600	2,795	2,990	3,185	3,380
2	Pay of one Assistant (including leave salary) @ Rs. 100—5—150 —(E. B.)—5—200 ..	1,300	1,365	1,430	1,495	1,560
3	Pay of Farm Overseer (including leave salary) @ Rs. 70—3—100	910	949	988	1,027	1,066
4	Pay of one Laboratory Assistant (including leave salary) @ Rs. 35—2—85 ..	455	481	507	533	559
5	Pay of one Laboratory Subordinate (including leave salary) @ Rs. 19—1—23 ..	228	240	252	264	276
6	Pay of one Laboratory Subordinate (including leave salary) @ Rs. 14—1—18 ..	168	180	192	204	216
7	Pay of nine gwallas @ Rs. 10-8-0 per mensem each	1,134	1,134	1,134	1,134	1,134
8	Cost of feeding animals approximately ..	2,500	2,500	2,500	2,500	2,500
9	Extra gwalla labour during metabolism experiment	200	200	200	200	200
10	Recurring expenses for chemicals and fragile apparatus, etc.	800	300	300	300	300
11	Non-recurring expenses for metabolism and feeding equipment, etc.	500	..	..	..	..
12	Contingencies spread over five years ..	1,500	..	..	..	..
	Total	12,295	10,144	10,493	10,842	11,191 =54,965

ENCLOSURE III.

SUPPLEMENTARY SCHEME FOR INVESTIGATING THE FEEDING VALUE OF MOLASSES TO MILCH COWS AND GROWING ANIMALS.

Introduction.

In the meeting of the animal husbandry committee held at Simla on 25th May 1939, the committee requested the Director, Imperial Veterinary Research Institute to submit a supplementary scheme to include work on milch cows and young stock, and recommended that the supplementary scheme should run concurrently with the scheme already approved.

The following scheme is, therefore, submitted accordingly.

As pointed out in the previous scheme, that although molasses contains concentrated and easily available carbohydrate, the excessive and abnormal distribution of minerals in it, call for extreme caution against its indiscriminate feeding in large amounts to milch cows and young stock. Incorporation of molasscuit in the minimum amount which is compatible with economical utilization to an already adequate ration, may be considered not only superfluous but ultimately physiologically harmful. As such, it is felt that for milch cows and for growing stock supplementation of molasscuit to the usually adequate (specially as regards energy) ration of these animals cannot apparently lead to any practical benefit. However, within reasonable limits and after proper adjustment it may be possible to incorporate molasscuit in a ration with benefit, by feeding it as a supplement in a ration which is apparently deficient in carbohydrate. Under normal condition of feeding, it is rather improbable that the carbohydrate should be a limiting factor. But in India one has to reckon such adverse circumstances as famine, prolonged drought etc., which can seriously curtail the source of carbohydrate supply. Moreover it is also likely that the ignorance on the part of an average feeder of live-stock in India may contribute a faulty method of feeding, where carbohydrate moiety of the ration may have inadvertently turned up deficient.

As a substitute, molasscuit has a more distinct possibility of economic utilization. After proper adjustment, it can be incorporated in larger amounts, by substituting for equicaloric carbohydrate of an adequate and balanced ration.

The plan of investigation into the economic benefit of feeding molasscuit to milch cows.—In planning the investigation endeavour has been made to see that the projected experiments should elucidate the following aspects of the problem of feeding molasscuit to milch cows :—

(a) What minimum and maximum amount of molasscuit can be fed with benefit by supplementing graded dose in a carbohydrate deficient ration.

(b) What minimum and maximum amounts of molasscuit can be fed with benefit by substituting graded dose, for equicaloric carbohydrate of an adequate ration.

With the foregoing consideration in view, the following are the proposed experiments to be undertaken.

Experiment No. 1.

In this experiment it is intended to study the effect of feeding a carbohydrate deficient ration supplemented by molasscuit in an amount equivalent to the actual deficiency of the nutrient. The following may be suggested a control ration which is over 50 per cent. deficient as regards the starch equivalent necessary for the purpose of production.

(*See Table I.*)

TABLE I.

The ration (for 1,000 lb. Live Weight).

For maintenance only.	lb.	*The Nutrients in the ration.*	lb.
Wheat bhoosa	15	Total digestible nutrients	8·01
Juar silage or Green Juar	20	Digestible protein	0·58
Mustard cake	2	Starch equivalent	6·3
		Total dry matter	23
For 10 lb. of milk production (3·5 per cent. butter fat).			
Mustard cake	1·5	Digestible protein	0·42
		Starch equivalent	1·05

The starch equivalent of the production part of the ration is 58 per cent. less than the true requirement. In order to make good this deficiency, 3·0 lb. of a mixture of molasscuit, wheat bran in the proportion 5 : 1 is necessary. From the available data, it is found that the mixture is comparable to crushed maize, inasmuch as 1·5 lb. crushed maize can be set against 3·0 lb. of the molasscuit—wheat bran mixture.

The plan of the experiment.

In a short preliminary trial, lasting over two weeks, a test should be made with 6 animals, to see whether the animals can voluntarily consume or not, 3·0 lb. of molasscuit-wheat bran mixture supplemented into the control ration prescribed above. If they do not, the amount left over should be substituted by an amount of crushed maize in the following proportion :—*For 1 lb. of mixture, substitute 0·6 lb. of crushed maize.*

When the maximum amount of molasscuit, that the animals will voluntarily eat is fixed, the subsequent experiments can be planned as follows :—

18 milch cows are divided into 2 groups, 9 in each.

The individuals of one group should have a mate in the other, identical as far as possible, as regards live weight, age, number of lactation, milk yield and other significant physiological conditions. In selecting animals, an endeavour should be made to include only those, whose milk yield is not less than 10 lb. They should be started on the experiment soon after calving and may be served by the bull within 3 months after calving.

It has been decided that the number of experimental animals in the present experiment should be 18, because of the fact that the milch cows, unlike others, are susceptible to sterility, abortion, mastitis, etc., which may affect the correct interpretation of the results of the investigation. A

slightly larger number of animals, will enable, at any stage of the experiment to discard the pathological subject, without frustrating the purpose of the investigation.

The lactation period can be divided into two more or less equal periods :—(1) The first half, during which, the physiological activities of lactation predominate the early gestation, and (2) the second half during which the physiological activities of gestation gain upperhand and the lactation lapses into a declining phase. In the first half of the lactation period one group will receive the supplemented and the other group the control ration. The feed will be reversed at the end of the first phase of lactation. This will enable one to study how the feed reacts during the early phase of lactation, as also during the declining phase. Towards the end of each phase, detailed 14-day metabolism experiments as enumerated in the case of working bullocks should be undertaken.

During the feeding period besides the daily milk yield, weekly change in live weight and food consumption should be recorded.

The experiment should be repeated again in the next lactation with the same animals. If found necessary the feeding may be suitably modified in the following lactation.

Experiment No. 2.

In this experiment it is intended to study the effect of feeding molasscuit as a substitute for equicaloric carbohydrate of an adequate ration.

The following may be suggested a typical experimental ration in which molasscuit has been incorporated in an amount which may be considered within the maximum limit of economic utilization and apparently compatible with the scientific principles of feeding.

(See Table 2.)

The experimental ration can be best compared against the control shown in Table 3.

(See Table 3.)

When the experimental ration is compared against the control it will be seen that other component remaining the same 6 lb. of mixture containing molasscuit and wheat bran in the proportion of 5 : 1 can be set against 7 lb. of mixture containing wheat bhoosa and crushed maize in the proportion of 5 : 2.

The plan of the experiment.

The same procedure as that of the Experiment 1 will be rigorously followed. Since the substitution method is relatively more important, the experiment will be spread over 3 lactation periods.

Feeding molasscuit to young stocks.

Bearing in mind the arguments advanced in the introductory part of this scheme as regards the possible methods of feeding molasscuit to young stock and further having in view that the ration of growing animals should be of narrow nutritive ratio, with adequate amounts of (a) proximate items (b) bone forming minerals in ideal physiological ratio and

(c) accessory food ingredients, following course of investigation may be undertaken to study, if or not, molasscuit could be incorporated in the ration both as a supplement and a substitute.

Experiment No. 1.

In this experiment it is intended to study, whether molasscuit can be supplemented in a ration. As pointed out elsewhere, supplementation of molasscuit can only be considered when the ration lacks in necessary energetic content.

The following may be suggested a control ration, which is 30 per cent. deficient as regards the starch equivalent necessary.

(*See Table 4.*)

TABLE II.

The experimental ration (for 1,000 lb. Live Weight).

For maintenance only. *The Ration.*	lb.	*The nutrients in the ration.*	lb.
Wheat bhoosa	10	Total digestible nutrients ..	7·9
Juar Silage or Green Juar (young)	20	Digestible protein	0·59
Mustard cake	1·75	Starch equivalent	6·1
Molasscuit Wheat bran / 5 : 1	3	Total dry matter	21
For the production of 10 lb. of milk (3·5 per cent. butter fat).			
Mustard cake	1·25	Digestible protein	0·42
Molasscuit Wheat bran / 5 : 1	3	Starch equivalent	2·5

TABLE III.

The control ration (for 1,000 lb. Live Weight).

For maintenance only. *The Ration.*	lb.	*The nutrients in the ration.*	lb.
Wheat bhoosa	15	Total digestible nutrients ..	8·01
Juar Silage or Green Juar (young)	20	Digestible protein	0·58
Mustard cake	2	Starch equivalent	6·3
		Total dry matter	23
For 10 lb. of milk production (3·5 per cent. butter fat.)			
Mustard cake	1	Digestible protein	0·42
Crushed maize	2	Starch equivalent	2·40

TABLE IV.

The control ration (for 500 lb. Live Weight).

The Ration.	lb.	*The Nutrients in the ration.*	lb.
Green Berseem	5	Total digestible nutrients ..	6·0
Wheat bhoosa	5	Digestible protein	0·92
Ground nut cake	1·5	Starch equivalent	4·2
Crushed maize	2	Total dry matter	9·3
		Nutritive ratio	5·8

In order to make good this deficiency 4 lb. of a mixture of molasscuit +wheat bran in the proportion of 5 : 1 is necessary. Since the mixture introduces about 0·08 lb. of excess protein, the amount of ground-nut cake in the supplemented ration to be reduced to 1·3 lb.

The plan of the experiment.

As in the case of milch cow, a preliminary experiment with the supplemented ration should be run with 6 animals for about 2 weeks, in order to get an idea of the maximum amount of molasscuit mixture the animals will voluntarily eat. If the animals refuse to eat a portion, an equivalent amount of a mixture of gram husk + wheat bran in the proportion of 5 : 1 should be incorporated into the ration.

The subsequent experiment should be planned as follows :—

12 calves should be equally divided into 2 groups—6 in each consisting of 3 heifer and 3 bull calves. As far as possible, the average live weight, age and sex of an individual of one group, should correspond with one of the other group. Of the two groups one will receive the supplemented experimental ration and the other, the control. The feeding experiment will last for 42 weeks, during which following records will be maintained :—

1. Food consumption.
2. Live weight.
3. General condition.

At suitable intervals, total calcium, inorganic phosphorus and phosphatase activity of the blood serum will be estimated. Detail metabolism studies as enumerated before will be undertaken at 2 different stages, of the feeding experiment.

The investigation will be repeated with a fresh set of 12 animals. If necessary, in the 2nd part of the investigation, the feeding practice may be suitably modified.

Experiment No. 2.

In this experiment it is intended to study the effect of feeding molasscuit as a substitute for equicaloric carbohydrate of an adequate ration.

The following may be suggested a typical experimental ration in which molasscuit has been incorporated after proper adjustment to conform with the scientific principles of feeding the growing stock.

TABLE V.

The experimental ration (for 500 lb. Live Weight).

The Ration.	lb.	*Nutrients in the ration.*	lb.
Green Berseem	5	Total digestible nutrients ..	7
Wheat bhoosa	5	Digestible protein	0·92
Ground-nut cake	1·3	Starch equivalent	6·1
Crushed maize	2	Total dry matter	13·5
Molasscuit + Wheat bran 5 : 1	4	Nutritive ratio	6·6

The experimental ration can be compared with the following control.

TABLE VI.

The control ration (for 500 lb. Live Weight).

The Ration.	lb.	*Nutrients in the ration.*	lb.
Green Berseem	5	Total digestible nutrients ..	6·8
Wheat bhoosa	5	Digestible protein	0·92
Ground-nut cake	1·3	Starch equivalent	6·3
Crushed maize	2	Total dry matter	13·5
Gram husk + Wheat bran 5 : 1	4	Nutritive ratio	6·7

When the experimental ration is compared against the control it will be seen that other components remaining the same 4 lb. of mixture containing molasscuit + wheat bran (5 : 1) can be set against the same amount of mixture containing gram husk + wheat bran (5 : 1).

The plan of the experiment.

The same procedure as that of the experiment 1 will be followed. The duration of the investigation will also be the same.

The duration and programme of work.

The investigation with the milch cows will be completed in 5 years and that with the young stock in 4 years. The investigations with the 3 different stock will run concurrently.

Staff for working the scheme.

The following additional staff for carrying out the supplementary scheme for investigating the feeding value of molasses to milch cows and growing animals is considered necessary.

Two Chemical Assistants ..	Rs. 100—5—150—10—250.
One Fieldman ..	Rs. 40—2½—70—3—100.
One Clerk	Rs. 45—2—85.
One senior Laboratory Subordinate	Rs. 23—1—33.
One 2nd grade Laboratory Subordinate	Rs. 19—1—23.
One junior Laboratory Subordinate	Rs. 14—1—18.
One Jamadar	Rs. 13-12-0 and Rs. 14-12-0 after 3 years.

Ten gwallas @ Rs. 10-8-0 each.

Additional labour as required.

Purchase of animals.

(a) The price of a milch cow giving on an average 10 lb. of milk per day and on her 3rd or 4th lactation is Rs. 70. For 18 such animals the cost of purchase will be Rs. 1,260.

(b) The price of calves of either sex weighing about 300—400 lb. live weight and about 6—8 months old is Rs. 25 per head. The cost of purchase of 12 such animals will be Rs. 300.

Requirements of molasscuit for carrying out the investigation outlined in the supplementary scheme.

First year	19,800 lb.
Second year	25,000 lb.
Third year	41,300 lb.
Fourth year	41,300 lb.
Fifth year	41,300 lb.
	1,68,700 lb.

Total approximately about 75 tons.

Statement of expenditure for supplementary scheme.

Particulars.	1st year.	2nd year.	3rd year.	4th year.	5th year.	Total.
	Rs.	Rs.	Rs.	Rs.	Rs.	Rs.
Salaries of staff and fixed labour ..	5,517	5,562	5,772	6,159	6,192	..
Total cost of feeding at the average rate of 8 annas per day for 18 milch cows.						16,200
Total cost of feeding at the average rate of 5 annas per day for 12 calves.						6,750
Extra labour during metabolism experiments.	400	400	400	400	400	..
Recurring expenses for chemicals and fragile apparatus, etc.	800	800	800	800	800	..
Total ..	6,717	6,762	6,972	7,359	7,392	22,950

	Rs.		Rs.
Non-recurring expenses for temporary Metabolism shed and equipments.	2,000	Total expenditure	62,912
		Deduct—	
Contingencies spread over 5 years ..	1,500	Anticipated income from the sale of milk during the period of experiment and from the sale of animals at the conclusion of investigation.	10,000
Purchase of animals	1,260		
		Net expenditure	52,912
		Say	53,000

APPENDIX CVI.

Note on Subject No. 41 (c) :—Scheme for the preparation of a critical Monograph on 'Animal Nutrition in India'.

At its meeting held in March 1938, the Advisory Board adopted the recommendation made by the Imperial Council of Agricultural Research Editorial Committee that a few critical monographs should be prepared by the Council, the subjects first to be taken up being Animal Nutrition, Rinderpest, Dry Farming and Rice Breeding (Annexure I). The intention was that the monographs should be drawn up on the lines recommended by Sir John Russell in his report (relevant extracts enclosed—Annexure II).

The special Joint Committee of the Governing Body and the Advisory Board recommended, at their meeting held in July 1938, that details as regards the cost and the necessity for publishing monographs should be worked out and examined for submission to the Governing Body.

The matter has been examined and a scheme for the preparation of a monograph on Animal Nutrition received in this connection from the Director, Imperial Veterinary Research Institute, Mukteswar (Annexure III) is now for consideration. The scheme involves a non-recurring expenditure of Rs. 6,030. It will first be examined by an appropriate committee whose recommendations will be submitted to the Advisory Board in due course.

Proposal for the preparation of a monograph on Dry Farming in India has already been approved by the Council. Proposals in regard to other subjects have not yet been examined.

ANNEXURE I.

RECOMMENDATIONS OF THE I. C. A. R. EDITORIAL COMMITTEE HELD AT NEW DELHI ON THE 10TH MARCH 1938.

1. Sir John Russell's recommendation regarding publications and the preparation of special monographs.

The Committee agreed that the Council should undertake the preparation of a few critical monographs on the lines recommended by Sir John Russell and to begin with attention should be limited to four, *viz.* :—

(1) Dry-farming.

(2) Rice Breeding.

(3) Rinderpest.

(4) Animal Nutrition.

There are three possible methods of getting this work done, *viz.* :—

(1) by offering an honorarium to a senior worker *plus* a grant to his institution to enable him to be relieved of a considerable portion of his regular duties ;

(2) by obtaining the loan of a senior specialist for anything up to a year as a full time officer ; and

(3) by advertising for a young specialist who also would be a full time officer and who might need more editorial assistance.

Whichever method is adopted, some staff for clerical and compiling work will be needed and considerable expenditure would be involved; no estimate is possible at this stage but it might easily run to say Rs. 15,000 for each monograph.

It was also agreed that each monograph should be in the form of a book, rather than in the form of a scientific memoir, and that it should include a good bibliography.

ANNEXURE II.

(*Extract from Sir John Russell's Report.*)

(Pages 5-6.)

The Second Stage—the Agricultural Experiment Stations.

* * * * * * *

In view of the fact that Indian experiment stations have been functioning for so many years it seems at first surprising that so little of the work done has found its way into the general body of agricultural science as expounded in the standard treatises. It is comparatively rare to find references to Indian investigations in books published outside India. Probably the chief reason is the widespread Indian practice of publishing the results in a large number of small communications, many of which are uncritical and unimportant having the character rather of journalism than of serious scientific literature. Research demands that a man should think long and carefully about it; hurried and scrappy publication prevents him doing this. It would undoubtedly enhance the dignity and reputation of Indian science if the leaders would combine to stop this fragmentation, and encourage only the publication of serious critical papers where the work has been properly planned and the results fully considered. Good memoirs compel attention and gain recognition wherever and by whomsoever published.

2. There is a considerable amount of good work in this vast mass of publications and it would be unfortunate if it all passed into oblivion. The best way of saving it would be preparation of critical monographs, each by a specialist having thorough knowledge of his subject and able to assess the value of scientific evidence, summarising the results obtained, pointing out clearly where they differ from those recognised in the regular treatises and in what respects they represent advances in knowledge. These monographs would be of great value to teachers and to experimenters in India, and if well prepared they would be taken seriously by all agricultural research institutes; they would not only show what has been achieved in India but would also cause other stations to examine any discrepancies between the Indian results and their own.

(*Extract from Sir John Russell's Report.*)

(Page 215.)

* * * * * * *

Much of the research in agricultural science done in India is not as widely known as it deserves to be and I recommend the preparation of a series of monographs by competent persons setting forth the results

obtained by Indian workers and pointing out how they differ from those obtained elsewhere.

* * * * * * *

ANNEXURE III.

COPY OF D. O. NO. G.|1812, DATED THE 23RD AUGUST 1939, FROM DIRECTOR, IMPERIAL VETERINARY RESEARCH INSTITUTE, MUKTESWAR, TO MR. P. J. KERR, I.V.S., ANIMAL HUSBANDRY COMMISSIONER TO THE GOVT. OF INDIA.

A copy of the scheme for "The preparation of a monograph on Animal Nutrition in India" prepared by Dr. Kehar is enclosed herein, as desired by you in your D. O. letter No. F.-12 (1915)-39-P., dated the 4th July 1939.

SCHEME FOR "THE PREPARATION OF A MONOGRAPH ON ANIMAL NUTRITION IN INDIA".

Sir John Russell in his tours in India in 1936-37 visited a large number of Laboratories and Experiment Stations in different provinces and States and observed that there was a considerable amount of good work in the vast mass of publication. He thought that it would be unfortunate if it passed into oblivion and recommended that besides other subjects a critical monograph on Animal Nutrition should be prepared by a specialist having thorough knowledge of his subject and able to assess the value of scientific evidence. These monographs are intended not only to summarise the results obtained in the Experiment Stations but should point out clearly where the results differ from those recognised in the regular treatises and in what respect they represent advances in knowledge. Sir John Russell emphasised that these monographs would be of great value to teachers and experimenters in India and, if well prepared, they would be taken seriously by all Agricultural Research Institutes. They would not only show what has been achieved in India but would also cause Experiment Stations in other parts of the world to examine any discrepancies between the Indian results and their own.

The vast field of Animal Nutrition has many aspects. Briefly it may be stated that the monograph should contain all the available information on (1) the analyses of various foodstuffs of India, (2) digestibility and utilisation of foodstuffs, (3) the physiological significance of the inter-relationship of foodstuffs, (4) diet in relation to reproduction, growth, milk production work, wool production, hides and skins, (5) investigation into mineral and vitamin requirements, (6) nutrition in relation to disease, (7) basal metabolism, and (8) conservation of fodders in regard to preserving their nutrients and the factors involved.

In addition, this monograph will, wherever necessary, deal with the inter-relation of animal nutrition and human welfare.

In view of the wide scope of the subject, it is easy to realise that investigational work has been going on for a long time not only in the Central but also in the provincial and State Agricultural and Veterinary Departments on one or more of the above problems. The Military Department has also done a large amount of work in their dairy and grass farms.

The results of all these workers will have to be collected from the various annual and other reports of the different departments as well as in the different journals, monographs, bulletins, etc., issued from time to time. In view, therefore, of the enormous amount of work, a period of one year is considered to be the minimum time for completing this monograph and in order that this may be completed within this time assistance will be required.

It may be pointed out that a critical and exhaustive examination of all the published and unpublished documents will have to be carried out by an experienced person capable of appraising the real value of the work and Dr. K. C. Sen, the Officer-in-Charge, Animal Nutrition Section, Imperial Veterinary Research Institute, Izatnagar (on leave at the moment) has been requested to undertake the preparation of the monograph, but in order that this may not unduly interfere with his normal duties it is necessary that he should be provided with a highly qualified and experienced Technical Assistant for a period of one year to collect the published and unpublished data from various sources.

In addition to the Technical Assistant, a typist and a part-time Artist will be needed for a period of one year and nine months respectively.

It will be necessary for the Chief Investigator and his Technical Assistant to undertake special tours to some of the major experiment stations in order to obtain firsthand information on the spot.

The Imperial Council of Agricultural Research should be requested to arrange with the Provincial and State Governments to provide facilities in collecting relevant information on the subject and also to allow their Statistician to render necessary assistance in the interpretation of the recorded observations.

The details of the expenditure which will be incurred in the preparation of the monograph on Animal Nutrition in India are given below :—

1.—*Pay.*

	Rs.
(*a*) Honorarium to the Officer-in-Charge, Animal Nutrition Section	500
(*b*) Highly qualified and experienced Technical Assistant at Rs. 200 per mensem for one year (Rs. 200 × 12)	2,400
(*c*) One Typist at Rs. 35 per mensem for one year (Rs. 35 × 12)	420
(*d*) Part time services of an Artist at Rs. 20 per mensem for nine months (Rs. 20 × 9) ..	180
(*e*) One peon at Rs. 15 per mensem for 12 months (Rs. 15 × 12)	180
Total ..	3,680

II.—*Travelling allowance.*

	Rs.
For visiting different places for collecting published and unpublished data	1,500
III. Contingencies	250
	5,430

IV.

Cost of preparation of blocks and printing of illustrations *for the Monograph*	600
Grand Total ..	6,030

APPENDIX CVII.

Note on Subject No. 42 :—Application from the Registrar, Calcutta University, for a grant of Rs. 15,506 spread over a period of three years for the extension of the scheme for investigation into the life history, bionomics and development of fresh water fishes in Bengal.

At their meeting held in January 1935, the Governing Body approved of a scheme for the investigation of the life-history, bionomics and development of fresh water fishes of Bengal by Dr. H. K. Mookerjee, of the Calcutta University, for a period of three years at a net cost of Rs. 6,620 to the Council. The work on the scheme started on the 1st December 1936 and is due to expire on the 30th November 1939. The Calcutta University have now submitted a proposal (Annexure) for extending the scheme for a period of three years from the 1st December 1939 at a total cost of Rs. 27,506. Out of this amount the Imperial Council of Agricultural Research is asked to contribute Rs. 15,506.

2. The proposal from the Calcutta University is on a much larger scale than the original scheme. The attached statement shows the provision under the various heads of expenditure in the extension proposal and in the original scheme. The Provincial Government recommend the proposal, subject to the reservation that no financial liability will devolve on them.

3. The matter will, in the first instance, be considered by the appropriate committee and their recommendations will be submitted for the consideration of the Advisory Board in due course.

STATEMENT.

Provision under the original scheme.

	Rs.
1. Research Assistant at Rs. 150 a month for three years .	5,400
2. Special attendant to look over the tank Hatchery, etc., at Rs. 20 per mensem for three years	720
3. For cleaning the tank	300
4. Small observational hatchery	550
5. Contingencies (for 3 years) at Rs. 100 per year . .	300
6. Purchase of fry and adult carp	300
7. Travelling allowance for visiting various fishery tanks .	200
8. Special apparatus, reagents, etc.	100
Total .	7,870
Contribution from Calcutta University (towards items 3, 4, 5 and 8 above)	1,250
Net Contribution from the Imperial Council of Agricultural Research.	6,620

Provision under the extension proposal.

	Rs.
1. Three Research Assistants :— 1. (Rs. 125) per month. 2. (Rs. 100) per month. 3. (Rs. 75) per month. For three years	10,800
2. One Laboratory Assistant (Special attendant) on Rs. 30 per month for three years	1,080
3. One Laboratory Bearer on Rs. 16 per month for three years	576
4. Wire netting for hatchery in the pond and its up-keeping for three years	1,250
5. Food of fishes to be purchased for experimental purposes	250
6. Fish and fries to be purchased for experimental purposes	600
7. Contingency	300
8. Floating Hatchery	250
9. Travelling allowance for visiting Fishery Tanks for studying the indigenous method adopted by local fisherman in breeding carps	400
10. Microscopes and other Biological Laboratory Instruments	1,600
11. Glass Jars and other vessels	1,500
12. Chemicals and Reagents	600
13. Laboratory Appliances	500
14. Net and other catching appliances	500
15. Laboratory Benches and other Requisites	1,500
16. Glass Tanks and Cement Tanks	2,900
17. One air pump with metal distributing pipes supplied to 20 tanks in two aquaria and the cost for its occasional replacement and repairing for three years	600
18. Electric motor for drawing pond water with one reservoir and metal distributing pipes for 20 tanks in two acquaria and its cost for occasional replacement and repairing for three years	500
19. Two slide cabinet boxes	400
20. Balance and sets of weights	650
21. Repairing of the hatcheries and the embankments of Jhil for three years	750
Total	27,506

N.B.—The items Nos. 1—9 (Rs. 15,506) are the contributions payable by the Imperial Council of Agricultural Research and Nos. 10—21 (Rs. 12,000) by the Calcutta University.

ANNEXURE.

SCHEME FOR INVESTIGATION OF LIFE HISTORY, BIONOMICS AND DEVELOPMENT OF FRESH WATER FISHES OF BENGAL BY DR. H. K. MOOKERJEE.

The Secretary, Imperial Council of Agricultural Research, New Delhi.

(Through the Registrar, Calcutta University, and the Provincial Agricultural Council of Bengal.)

Dear Sir,

I beg to apply for the extension of the scheme for a further period of three years, for " The investigation of the life-history, bionomics and the development of fresh water fishes of Bengal." This scheme was approved by the Imperial Council of Agricultural Research for a period of three years from 1936 to 1939, and was given effect to from the 1st December 1936. It will expire on the 30th November 1939.

I have submitted two reports embodying the results of the investigations for the period commencing from the 1st of December 1936 and ending on September 1938 and these reports would show the valuable works that have been done with regard to natural and artifiical food of fishes, the development of fries, determination of sexes of fries and the physical conditions of water directly influencing the growth of food-fishes of Bengal. The third report is to follow soon.

It is needless to mention that no sicentific results, particularly in the realm of applied biology can be usefully employed unless thoroughly experimented for a number of years and all avenues of attack on the problem have been considered. It is for this reason alone that an extension of the scheme is deemed essential.

I desire here to mention that I attended the Meeting of the Fish Committee under the Advisory Board of Imperial Council of Agricultural Research held at Simla in May 1939 and explained the details of the work and the progress so far made with regard to the determination of foods, breeding habits, identification of sexes of fries in early stages.

The Fish Committee (Extracts appended to at the end) were of opinion that this scheme in the short duration of three years could only provide preliminary data with regard to four varieties of fishes, namely, Catla, Rohu, Mrigal and Calbasu and there was a long list of edible-fish on which this experiment needs repetition. The Committee also desire that the following items should also be further investigated : (1) Determination of artificial and natural food, (2) Detailed information in fish culture on a larger scale, and (3) Work on artificial breeding.

It is worth noting that since there has not been any organised attempt on the scientific lines to solve the Inland Fisheries of India, particularly of Bengal, we had to face in the preliminary investigations various difficulties and the results so far obtained, however, satisfactory may be, are far from complete. A further extension of work on lines suggested by the Fish Committee for a period of 3 years at least is indispensable for satisfactory completion of the enquiry.

I propose to inclue in the extended scheme, artificial fecundation, breeding habits, food of fishes, life-history, development, biological factors affecting fish life and detailed information of fish culture, etc.,

as shown in the appendix. The summary of results previously obtained. is also put along with this new scheme in the appendix.

In the current scheme greater attention had been devoted, as suggested by the Advisory Committee, to the natural and artificial food of fishes. The other side of the problems such as the artificial fecundation could not be sufficiently worked out as the time was too short. In the extended scheme more attention will be paid to the problems in hand in addition to problems alluded to above.

In the extension scheme provision has to be made for employment of research scholars and for meeting establishment charges as in the past. The only improvement which I have suggested in this connection is that there should be three research scholars instead of two. The services of the research workers attached to the present scheme should be retained. In view of their experience and training they should be given better remuneration in the extended scheme. I have observed that higher pay is necessary because trained scientific workers are not available on this line, and those connected with the scheme, are attracted elsewhere by the offer of better emoluments. Further it has been found in course of our investigations that two research assistants are not sufficient to cope with the work. Besides it has been pointed out by Col. Olver as well as the Imperial Entomologist in reply to our first report, that there is a necessity of engaging an Entomologist in the scheme for identifying the food-insects of fishes. Since the food of fishes under natural condition in the tank consists of small crustaceans such as cyclops, daphnia as well as insect larvae and other fauna, it is necessary that a fresh-water biologist should be attached with the scheme for the study of the biology of food of fishes, and his duty should be to make specific determination of the various organisms consumed by fishes.

I suggest that the senior research scholar should be paid Rs. 125 per month and the two others Rs. 100 and Rs. 75 per month, respectively. I have suggested the first two posts should go to the research assistants who are now already attached to the present scheme. The new recruit should be paid Rs. 75 per month. The special attendant in view of the good work he has done and since he has got no increment for the last three years should be paid Rs. 30 per month. He is thoroughly trained in this line and possesses admirable qualities for the work. In view of the additional work an extra bearer is also necessary. We felt greatly hampered last few years for want of a bearer. The wages of the bearer will be at the rate of Rs. 16 per month.

With regard to the cost of equipment, provisions are to be made for constructing the new hatcheries in the Jhil.

An allowance should be set apart to meet the travelling charges for studying indigenous fisheries of India.

Other incidental expenses will be borne by the University as in the last scheme. The details of this scheme and the personnel of the staff are also appended to at the end.

It is needless to mention that the extended scheme (appended herewith) embraces the problems recommended by the Fish Committee and includes enquiry into factors affecting economy of fish life.

The total cost of extended scheme including stipends and other expenditures will be Rs. 27,506 spread over three years of which Rs. 12,000 will be borne by the University and the balance of Rs. 15,506 by the Imperial Council of Agricultural Research.

In view of the importance of the problems suggested in the new scheme; I hope you will be good enough to accord the necessary sanction to it.

Yours faithfully,

H. K. MOOKERJEE.

CALCUTTA :

Dated the 18th August 1939.

A BRIEF SUMMARY OF THE RESULTS OBTAINED DURING THE PERIOD FROM DECEMBER 1936 TO SEPTEMBER 1938.

1. Identification of fries of *L. rohita, C. mrigala, L. calbasu, Catla catla, C. reba* and *L. boga* from the 8 mm. stages to upwards was done by some external morphological characters, such as black and yellow dots, size of the head, colour and barbels, etc.

[*Vide* Annual Reports—Pp. 2-3 (36-37)
—Pp. 1-2 (37-38).]

2. Natural and artificial foods for the fries of carps (*Rohu, Mrigal, Catla* and *Calbasu*) from 6 mm. stages to upwards were determined.

[*Vide* Annual *Reports*—Pp. 3-4 (36-37)
—Pp. 2-3 (37-38).]

(*a*) Natural foods were determined by the microscopical examination of the gut contents. It was found that the natural foods consisted of Protozoa small crustacea and Algae and there are different proportions in different stages. Under natural conditions the fries from 6 mm. to 1·5 cm. take fresh water flagellates, ciliates, such as, Paramoecium, vorticeella, etc. Fries bigger than 1·5 cm. take small crustacea, daphnia, cyclops, water weeds and green and blue-green algae.

[*Vide* Annual Reports—P. 3 (36-37)
—Pp. 8-9 (37-38).]

(*b*) The artificial food was determined by keeping the fries in the acquarium and supplying them with different foodstuffs. The cheapest artificial foods determined are, rice, peas, flour, soyabean and powdered blood, beef and meat. Relative values of these foods were determined. It was found that rice gave better results in case of *C. mrigal* and *L. calbasu* and flour to *L. rohita.*

[*Vide* Annual Reports—Pp. 3-4, 9-14 (36-37)
—Pp. 10-23 (37-38).]

(*c*) The natural foods for the adult *Rohu* only were determined by examining the gut contents. It was found after examination that the algae specially the blue green algae constituted the main bulk of the food.

[*Vide* Annual Reports—Pp. 3, 24 (37-38).]

3. The average consumption of food by each *L. rohita* per day measuring 34·2 cm. in length was found to be 3·46 gms. in paste condition and 2·25 gms. in dry conditions ; the food composed of soyabean and flour being given in proportion to 1 : 2.

[*Vide* Annual Reports—Pp. 4, 29 (37-38).]

4. Physical conditions of the water of the Jheel and Tank were recorded daily and it was found that the health of the fish deteriorated with the fall of PH values of water. But this fall of PH values could be prevented by introducing aquatic plants and keeping the tanks under required exposure to light.

[*Vide* Annual Reports—Pp. 5, 21 (36-37)
—Pp. 4-5, 30 (37-38).]

5. Temperature of the water of the Jheel was recorded daily throughout the year and it was observed that the growth of the fishes was retarded at low temperature.

[*Vide* Annual Reports—P. 5 (36-37)
—Pp. 5, 30-31 (37-38).]

6. In course of experiments of food it was found that the protein matter led to the contamination of water by bacteria which caused the inflammation of the gills and sores on the body of the fishes.

Another cause of death was Asphyxia owing to the choking of the gills by parasites.

Myxosporidia were found commonly infecting the gallbladder, intestine and gills.

Remedies.—Bacterical infections were removed by changing water and introducing plants like vallisneria, hydrilla, etc., which help the fish in oxygenation. The fish infected with myxosporidia was treated with saline bath.

[*Vide* Annual Reports—P. 4 (36-37)
—P. 4 (37-38).]

7. Seasonal flora (algae) and fauna of the Jheel in relation to fish life were partly studied.

The fauna consisted of protozoa, daphnia, insects, fish, etc.

[*Vide* Annual Reports—Pp. 5, 32 (37-38).]

8. The sex dimorphisma of *L. rohita* and *C. mrigala* were done by the measurements of the different lengths of pectoral and anal fins.

The sexual dimorphic character sex behaviour and period of spawning *B. conchonius* were studied.

[*Vide* Annual Reports—Pp. 6, 22-24 (36-37)
—Pp. 6-7 (37-38).]

9. Formations of gonad in the fries of carps at their early stages were determined.

[*Vide* Annual Reports—P. 7 (37-38).]

10. Breeding habits, migration and the parental care of *O. punctatus*, and *O. marulius* were studied.

[*Vide* Annual Reports—P. 6 (37-38).]

11. Bred the Ophiceephalus punctatus in our aquarium in order to study the live-history of this fish.

[*Vide* Annual Report—P. 6 (3-38).]

12. The greatest quantity of liver obtainable amongst the carps was determined.

[*Vide* Annual Reports—Pp. 5-6, 33 (37-38).]

13. Biological controls of malaria by employing different kinds of fishes, such as, *Nadas nadas, Trichogaster fasciata*, etc., have been worked out.

[*Vide* Annual Reports—P. 6 (36-37)
—P. 7 (37-38).]

Problems for the extended scheme.

1. Further investigations on the identification of the fries of carps below 8 mm. stage are to be continued.

Special attention is to be paid to the identification of the fries of such fishes as are carnivorous and prey on carps.

2. Further observations are necessary for determining the foods for the fries of *Rohu, Mrigal, Calbasu* and *Catla* below 6 mm. stage and for other species of food-fishes.

(*a*) Foods in natural conditions are to be investigated. Observations on this line should be carried on for at least a number of years.

(*b*) Many other artificial foods are also to be determined for the fries of carps and other species of fishes.

Relative values of the natural and artificial foods and their specific effect on growth are to be determined.

(*c*) The natural foods for adult *Mrigal, Catla, Calbasu* and other species of carps are to be determined.

3. Daily consumption of other artificial foods by *Rohu* as well as other species of fishes should be determined.

The relation between growth and food are to be determined.

4. Physical conditions of each and every tank and the effects of variations of the PH values of water on the growth of fishes are to be recorded.

5. Further observations on temperature are required before any generalisation can be made with regard to its effect on fish life.

6. Further experiments on the protein food are to be conducted.

Other diseases such as fungus diseases, worm infections, etc., of the fishes are to be studied and its remedial measures are to be sought out.

7. Seasonal fauna and flora should be thoroughly studied and special stress should be given to their specific identification and correlations with the natural growth of the fishes and fries.

The pond life should be studied in different seasons in special regard to the economy of fish life.

8. Sex dimorphic characters of *L. calbasu, Catla catla* and other species of fishes are to be investigated.

The spotting of the sexes is essential for the determination of proportion of male and female populations and for artificial fecundation.

Artificial fecundation if successful will solve the important question of increasing the fish population and the large number of deaths at the egg stages will be eliminated.

Along with this, fertility and factors bearing on it are to be studied.

In connection with the artificial fecundation, sex behaviour, breeding habits, the date of spawning and spawning ground are to be enquired. Such data are of fundamental importance for carp breedings.

9. Observation with regard to the development of gonads should be done with respect to other species of fishes than *Rohu, Catla, Mrigal* and *Calbasu* and the determination of the age of the fishes is to be studied by scale readings in order to determine the period of its maturity.

10. Breeding habits of common species of food fishes are to be studied.

11. Life-histories of fresh water fishes are to be studied.

12. Liver contents in other fishes are to be enquired.

13. Biological control of Malaria by employing other small fishes is to be studied.

14. Detail information as to the fish culture are to be gathered by surveying different fisheries.

15. Chemical sides of the problems are to be worked out because no attention could be paid in the earlier scheme for want of time.

Detail Expenditures of the 3 years' Scheme.

	Rs.	a.	p.
1. Three Research Assistants— (1) (Rs. 125) per month. (2) (Rs. 100) per month. (3) (Rs. 75) per month. For three years.	10,800	0	0
2. One Laboratory Assistant (special attendant) on Rs. 30 per month for three years ..	1,080	0	0
3. One Laboratory Bearer on Rs. 16 per month for three years	576	0	0
4. Wire netting for hatchery in the pond and its up-keeping for three years ..	1,250	0	0
5. Food of fishes to be purchased for experimental purposes	250	0	0
6. Fish and fries to be purchased for experimental purposes	600	0	0
7. Contingency	300	0	0
8. Floating hatchery	250	0	0
9. Travelling allowance for visiting fishery tanks for studying the indigenous method adopted by local fishermen in breeding carps	400	0	0
10. Microscopes and other Biological Laboratory Instruments	1,600	0	0
11. Glass jars and other vessels	1,500	0	0
12. Chemicals and reagents	600	0	0
13. Laboratory appliances	500	0	0
14. Net and other catching appliances ..	500	0	0
15. Laboratory benches and other requisites ..	1,500	0	0
16. Glass tanks and cement tanks	2,900	0	0
17. One air pump with metal distributing pipes supplied to 20 tanks in two aquaria and the cost for its occasional replacement and repairing for three years ..	600	0	0
18. Electric motor for drawing pond water with one reservoir and metal distributing pipes for 20 tanks in two aquaria and its cost for occasional replacement and repairing three years	500	0	0
19. Two slide cabinet boxes	400	0	0
20. Balance and sets of weights	650	0	0
21. Repairing of the hatcheries and the embankments of Jhil for three years ..	750	0	0
Total ..	27,506	0	0

N.B.—The items Nos. 1—9 (Rs. 15,506) are the contributions payable by the Imperial Council of Agricultural Research and Nos. 10—21 (Rs. 12,000) by the Calcutta University.

Extracts from the Proceedings of the meeting of the Fish Committee held at Simla on Monday, the 22nd May 1939.

* * * * * * *

Report of the Scheme for the investigation of the Life-history, Bionomics and Development of Fresh water fishes of Bengal, 1937-38 (item 44 of the Agenda of the Advisory Board).

Dr. Mookerjee explained the details of the work and the progress made during the period under review. He observed that the essential preliminaries in an investigation of this nature was the determination of foods and methods of breeding both artificial and natural. The simple indication regarding the identification of sexes in fries would help the layman in sorting out the species required for the specific purpose in view.

The Committee were of the opinion that the report furnished some interesting and valuable information, especially on identification and food of fries, sex determination, breeding habits, and identification of sex in fries at their early stage, etc. It was, however, unanimously agreed that during the scheduled duration of three years, this scheme would only provide some preliminary data in regard to the four varieties (*viz., Katla, Rohu, Calbasu* and *Mrigal*) and that there was a long list of edible fish on which these experiments needed repetition. It was anticipated that some more definite information about artificial spawning would be forthcoming in the next, *i.e.*, the final report on this scheme.

As regards the four species of fish dealt with so far, the Committee desired that in addition to the work already being carried out, the following items should be further investigated :—

I. Determination of artificial and natural foods ;

II. Detailed information on fish culture on a larger scale ; and

III. Work on artificial breeding.

Similar work on species of other edible fish should be carried out and this should form the basis for a further scheme.

APPENDIX CVIII.

Note on Subject No. 43-I :—Technical programme of work relating to the *scheme for carrying out* Biological Investigations in the Chilka Lake Fishery.

The Advisory Board at their meeting held in May 1939 considered a scheme, submitted by the Orissa Government for carrying out biological investigations in the Chilka Lake Fishery and recommended it to the Governing Body, at a cost to the Council not exceeding Rs. 41,850 spread over a period of two years. The Governing Body at their meeting held in July 1939, sanctioned the scheme for a period of one year at a cost to the Council of Rs. 21,000. Subject to the annual research grant of the Council for 1940-41 being voted by the Central Legislative, it is proposed to allot funds to the scheme early next year.

2. The Orissa Government has submitted the attached technical programme of work for approval. The programme will be considered in the first instance by the Animal Breeding Committee whose recommendations will be circulated to the Advisory Board in due course.

TECHNICAL PROGRAMME OF WORK RELATING TO THE SCHEME FOR BIOLOGICAL INVESTIGATIONS IN THE CHILKA LAKE FISHERY.

Statisticals.

1. Total weight of the catch of fish exported from Balugaon each day. (To be obtained everyday from Railway authorities).

2. Important species of food-fish present in each day's catch arriving at the Station.

3. Relative quantities of each species in random catches.

4. Approximate average size of each species in the random samples—also maximum size and weight.

2, 3 and 4 above will further be checked by examination of catches in other parts of the Lake.

Occasional catches will be made by the staff also in different parts of the Lake.

N. B.—As far as possible such data are to be collected for Prawns and the more important species of crabs also.

Breeding Seasons.

1. Examination of gonads to determine the ripeness or otherwise of sexual products.

2. Examination of plankton for eggs and young ones.

N. B.—These observations to be made for Prawns also.

3. Correlation of size of fish with breeding season as determined by the ripeness of eggs, etc.

Life-histories and Growth.

1. Study of suitable species of fish in aquaria for purposes of artificial fertilization.

2. Study of the possibility of maintaining nature specimens of different species in aquaria for determining their life-histories.

3. Collection of young ones in the Lake and studying their growth, etc., in aquaria, and in large cages suspended from cables in parts of the outer channel and in the Lake.

4. The study of the relative abundance of age-groups with a view to determining rates of growth from specimens collected in the Lake all the year round.

5. Marking of young fish and the subsequent changes in their measurements in the Lake and weight if and when recovered.

6. Study of scales and otoliths for determination of ages of fish.

Nos. 2, 3 and 4 for Prawns also.

Food.

1. Examination of stomach contents in specimens obtained from random catches with a view to determine the nature of food available at different seasons.

2. Same in specimens caught by the staff in the Lake.

3. Weekly collection of plankot (both zoo—and phyto—) in the Lake and the outer channel, and qualitative (very approximate) and quantitative study of the same.

4. Study of bottom-deposits, algae, etc., in the Lake.

Migration.

1. Examining catches qualitatively in the outer channel to determine species coming into the Lake from the sea and those going out from the Lake into the sea.

2. Marking* of fish in the (i) outer channel and (ii) in the Lake after taking measurements.

3. Recording of marked fish subsequently caught from catches : (i) in the Lake and (ii) in the sea near the mouth to determine the range of migration.

4. Observation† of shoals of fish either entering or leaving the Lake in the different seasons.

5. Correlation of the aboundance of any particular species of fish with any particular element in the Plankton.

6. ‡Study on temperature,§ P. H. and salinity in different parts of the Lake in different seasons.

---

*To make this a success the co-operation of fishermen on the coasts nearby should be obtained by offering suitable money rewards for recovery of marked fish.

†This will only be possible if any fishing is being carried on in the open sea.

‡The value of the study of the physical conditions of the Lake will be greatly enhanced if the Physics and Chemistry Departments of the Ravenshaw College at Cuttack undertake to investigate these problems in collaboration with the biological research staff engaged on the Lake. The abundance of food for the fish in the Lake depends on the physical conditions prevalent at different seasons, and it is essential that fluctuations in regard to these factors must be studied simultaneously.

§Weekly or fortnightly records of the data will be maintained by the staff.

Nos. 1 and 4 Prawns also.

General Study.

1. When fish are dissected for the determination of the gut-contents observations on the parasites, internal and external, and their adverse effects, if any, on the fish will also be recorded.

2. Periodical examination of the gut-contents of predatory fish and other enemies of edible fish in the Lake will also be made.

3. Observations on the bird fauna of the Lake—their abundance in various seasons and their preference, if any, for particular species of fish.

4. Observations on mortality, if any, of fish in large numbers in the Lake due to meteorological, chemical or biological causes.

APPENDIX CIX.

Note on Subject No. 44 (c) :—Consideration of allotment of funds to provinces for marketing work from the 1st April 1940.

The attached extract (Enclosure) from a note by the Agricultural Marketing Adviser to the Government of India on the above subject is submitted to the Advisory Board for consideration.

ENCLOSURE.

EXTRACT FROM THE AGRICULTURAL MARKETING ADVISER'S NOTE No. D. 254-(9), DATED THE 9TH SEPTEMBER 1939, REGARDING BUDGET ESTIMATES FOR 1940-41.

VIII.—*Grant for meeting expenditure on provincial portion of the marketing scheme.*

With a view to consolidating all the marketing demands a sum of Rs. 2,00,000 previously paid to Imperial Council of Agricultural Research has been provided in my budget under this head. As Burma will no longer get her share of contribution of Rs. 20,000 it is suggested that this amount may be allocated to the other provinces as follows :—

	Rs.	
Orissa	15,000	
Assam	5,000	in addition to the usual grant of Rs. 10,000.
	20,000	

I would also suggest that the amount of contribution to Sind should be reduced from Rs. 20,000 to Rs. 15,000 and the resultant saving of Rs. 5,000 may be given to North-West Frontier Province.

The reasons for the above re-allotments are as follows :—

Orissa has just appointed a Senior Marketing Officer and some junior staff. This province, therefore, requires a substantial assistance from the Central Government and I think Rs. 15,000 is an adequate grant.

In Assam and the North-West Frontier Province the necessity for augmenting the marketing staff is being keenly felt and I think an additional grant of Rs. 5,000 to each of these provinces would meet their extra demands.

Sind, unlike other provinces, has not appointed any Senior Marketing Officer and is not incurring any expenditure from its own funds for pay of officers. I have, therefore, suggested a reduction of Rs. 5,000 in their grant.

Subject to further consideration by the Imperial Council of Agricultural Research in due course I would suggest tentatively a revised allocation to Provinces as under :—

Name of province.	*Grant for 1940-41.* Rs.
Assam	15,000
Bengal	20,000
Bihar	20,000
United Provinces	20,000
Punjab	20,000
North-West Frontier Province	15,000
Bombay	20,000
Sind	15,000
Central Provinces	20,000
Madras	20,000
Orissa	15,000
	200,000

APPENDIX CX.

Note on Subject No. 46 :—Application from the Government of the United Provinces for a grant of Rs. 45,000 for a scheme of research work on the ghee to be undertaken at the Harcourt Butler Technological Institute, Cawnpore.

Attention is invited to the attached scheme of research on ghee submitted by the United Provinces Government. The scheme exclusive of the cost of chemicals and ordinary apparatus, is estimated to involve an expenditure of Rs. 45,000 (Rs. 5,000 non-recurring and Rs. 40,000 recurring) spread over a period of five years. It has been proposed that the entire expenditure should be met from the funds of the Council.

2. The United Provinces Government are willing to provide the following facilities as their share of contribution towards the scheme :—

(a) The part-time services of the Oil Expert to Government of the United Provinces and Head of the Oil Section of the Harcourt Butler Technological Institute as the officer-in-Charge of the scheme.

(b) Chemicals and ordinary apparatus required for the scheme to an extent of Rs. 2,000 per annum.

(c) Laboratory and necessary equipment for the research work to be undertaken at the Institute.

3. The scheme will in the first instance be examined by an appropriate committee whose recommendations will be circulated to the Advisory Board in due course.

AN APPLICATION FROM THE U. P. GOVERNMENT TO THE IMPERIAL COUNCIL OF AGRICULTURAL RESEARCH FOR A TOTAL GRANT OF Rs. 45,000 (Rs. 5,000 NON-RECURRING AND Rs. 40,000 RECURRING SPREAD OVER FIVE YEARS) FOR THE RESEARCH WORK ON GHEE TO BE UNDERTAKEN AT THE HARCOURT BUTLER TECHNOLOGICAL INSTITUTE, CAWNPORE.

Introduction :—

The annual production of Ghee in India is estimated at 23,000,000 maunds and for its preparation approximately 363,700,000 maunds of milk are used in the country (Wright's report 1937 on the Development of the Cattle and Dairy Industries of India). The manufacture of ghee is of special importance to India as the industry is being carried out on cottage industry lines and the product is mainly consumed within the country. The production of ghee is concentrated in the Indo-Gangetic Plain, Western India including Gujrat and Kathiawar, Rajputana States, Central Provinces and Berar.

The value of ghee manufactured in the country is over 80 crores of rupees taking the average price of ghee at Rs. 35 per maund.

The following processes are generally adopted in the country for the manufacture of ghee :—

1. *Kathiawar and Gujrat.*—The unboiled or boiled milk is curdled by the addition of butter milk from previous churning or

curd and kept covered till the next day, when the curd is churned and butter separated. The butter is then gently boiled permitting only slight evaporation of moisture and the raw ghee is decanted into tins while hot. The (under-boiled) ghee has a characteristic aroma which is regarded essential in order that it may give on final clarification a ghee of good flavour.

2. *United Provinces.*—(i) In the North Western districts ghee is made from milk that is well boiled before souring and the churning of butter is generally done daily. The melting of butter into ghee is done weekly.

(ii) In the Southern and Eastern districts raw milk is often added to the curd made from the boiled milk and the mixed curd is churned for butter once in 3 or 4 days.

The production of ghee generally decreases during summer months and the quality is also poorer hence winter product is stored as under boiled ghee (Kacha balashi) and clarified ghee (Pucca balashi).

3. *Bihar.*—In this province there are three principal methods of making ghee :—

(i) *Chali-Ghee.*—After cooling the heated milk a small quantity of curd is added to turn it into Dahi (curd). With the setting of the curd a part of milk-fat rises to the surface (Chali). This is removed and collected while the curd is sold. The Chali is then churned and the butter obtained is turned into ghee.

(ii) *Mahaur Ghee.*—Milk is heated in an earthen vessel and is cooled. The cold milk is then churned for butter which is immediately clarified for obtaining ghee.

(iii) *Mukhan Ghee.*—Ghee prepared from butter obtained from mechanically separated cream is known as Mukhan Ghee.

4. *Central Province and Berar.*—The boiled milk is curdled by the addition of curd or butter milk and kept till the next day when it is churned and butter separated. The butter is then melted for obtaining ghee either immediately or after collecting for a week.

On account of varied conditions existing in the manufacture of ghee in India and the types of animals and their feed the quality of the products obtained and its keeping property differs considerably.

It is apparent that the whole subject needs investigation and it should be carried out on an adequate scale with proper control.

Object of the Scheme and its urgency :—

The importance and magnitude of the industry justify extensive study of the many problems connected with the production of ghee and its properties.

Ghee is judged partly by its appearance and texture and partly by its taste and aroma. The purity of ghee is, however, determined by chemical examination.

Dr. Wright in his report has suggested that research and investigation work should be carried on the following aspects of the industry :—

1. Methods of manufacture.
2. Cause of development of acidity and the keeping quality of ghee under different conditions.
3. Chemical and physical factors affecting flavour, palatability and texture of ghee.
4. Effect of seasonal variation on the production and quality of ghee.
5. Investigation of the methods of analysis and formulation of standards suitable for various parts of India.
6. Proper grading and marketing of ghee.

These are all practically unexplored subjects, as very little systematic work has been done in these directions with the exception of items 5 and 6 on which sufficient amount of work has been done during the last two years as explained below.

The scheme of grading and marketing is not likely to make good progress unless at the same time strenuous efforts are made to improve the quality of the product and to check the evil practice of adulteration.

Work done on the subject and investigation proposed to be undertaken :—

With the help of the Imperial Council of Agricultural Research and the Marketing Department of the Government of India the work of the preparation of standard specification for ghee was taken up at the Harcourt Butler Technological Institute, Cawnpore in 1937.

For this grade specification work samples of ghee from various provinces were collected and examined. The results were placed before the 1st Ghee Conference held in Simla in September 1937. In this Conference it was decided to grade ghee of the agreed specifications (*vide* proceedings of the 1st Ghee Conference) under the Agricultural Produce (Grading and Marking) Act 1937.

Special investigation into the chemical properties of Kathiawar ghee was undertaken at this Institute. The results of the investigation were placed before the 2nd Ghee Conference held at Bombay in January 1938 and it was agreed to grade Kathiawar ghee under the specifications approved (*vide* proceedings of the 2nd Ghee Conference).

The grade specification work of the Indian Butter has recently been completed at this Institute with the help of the Imperial Council of Agricultural Research and the report is under consideration of the Marketing Board of the Government of India.

This work has given rise to the establishment 25 grading stations and 50 packing stations for grading and packing of pure ghee in India.

In addition to the work done at this Institute, research work on ghee is being carried out in India at the Indian Institute of Science Bangalore,

The Imperial Dairy Institute, Bangalore and the Benares Hindu University, Benares. The following few investigations are very important :—

1. Study of various standards adopted for the examination of Indian Butter and Ghee. (Indian Institute of Science and Imperial Dairy Bangalore).
2. Study of Ghee—effect of heat, air and sun light on vitamin A (Indian Institute of Science, Bangalore).
3. Storage of Ghee and Vitamins (Indian Institute of Science, Bangalore).
4. Thiocynogen values of ghee (H. B. Technological Institute, Cawnpore).
5. A. and B. values of Ghee produced in India (Benares Hindu University, Benares).
6. Improved method of Ghee manufacture (H. B. Technological Institute, Cawnpore).

At the Imperial Dairy Institute, Bangalore the investigation on the methods of preparation of Ghee, its comparative yield and control of texture of Ghee is in progress.

The work which is at present being carried out at various places requires co-ordination and further study to ascertain as to how it could be profitably utilised for the development of Indian Ghee Industry.

It is proposed to undertake the following work at the Harcourt Butler Technological Institute, Cawnpore, under the proposed scheme :—

1. Study of the methods of manufacture to improve the yield of ghee without detriment to appearance, texture, taste, aroma and Vitamin contents.
2. Study of the keeping qualities of ghee and the methods of storage.
3. Study of the seasonal effects on the quality of ghee and its keeping quality.
4. Effect of feed on the quality of ghee.
5. Special investigations for the detection of adulteration of ghee with small quantities of foreign substances.

Location of Work :—

The Harcourt Butler Technological Institute, Cawnpore, is an ideal place for this kind of research work. In this Institute training of Post-graduate students in Oil Technology is undertaken along with research work on oils and fats and their allied products. The Institute is well equipped with laboratories, special and semi-large scale apparatus and has fully qualified technical staff. The Central Ghee Control Laboratory of the Imperial Council of Agricultural Research is also located at this

Institute. The Agriculture College—another important institution having a first-class dairy attached to it—is in an adjoining building.

There is thus in this Institute every facility for carrying on the proposed research and investigation work.

Details of the work to be undertaken :—

1. *Study of the methods of manufacture.*—Methods of manufacture prevalent at the various important Ghee producing centres will be studied on the spot and samples will be collected under personal supervision for further investigations such as Chemical and Physical properties, Texture, Aroma, Vitamin content, Keeping qualities. The results of the improved methods will be similarly investigated. The question of the profitable disposal of Lassi and separated milk will be studied side by side with economic aspect of the methods of manufacture.

In this work help of the Central Marketing Board as well as Provincial Marketing Staff will be taken wherever necessary as the subject is of an all-India importance and they are in touch with various markets.

2 and 3. *Study of Keeping qualities of Ghee and the seasonal effect on the quality of Ghee.*—The question requires an exhaustive study and should cover all grades of Ghee from Ghee obtained under controlled conditions of feed from a first class dairy to Ghee produced on big scale from herds in villages and melting stations of merchants. The study will lead to ascertain the exact conditions that are responsible for the deterioration of Ghee under storage. The effect of containers, storage conditions, seasonal effect will also be studied in detail. Samples of Ghee under controlled conditions will be arranged from the Imperial Dairy, Bangalore, as well as from local dairies. Samples of herds of cattle fom villages and merchants' samples will be collected under personal supervision.

4. *Effect of Feed on the Quality of Ghee.*—The study of the effect of feed on the quality of Ghee will be taken up in collaboration with a first class dairy like the Imperial Dairy, Bangalore, or the Central Dairy Research Institute, when established.

This work will be taken up at a later stage and a separate scheme to cover the cost of feed control experiments will be submitted after consultation with the Imperial Dairy Expert or the Director of the Dairy Research in India.

The samples from the various Ghee producing localities in India differing in feed will be collected for examination under personal supervision.

5. *Special investigations for the detection of adulteration of Ghee.*—An exhaustive study of the work that has been carried out in various countries on Butter and Ghee (Butter fat) will be undertaken and the selected methods will be applied to various qualities for Ghee produced in India. Special investigations of the characteristics of the vegetable and animal products used in the adulteration of Ghee will be carried out with a view to find out easy methods of detection of adulterants in small quantities.

Grant Required :—

Non-recurring :

	Rs.
for the purchase of special equipment and appliances for the work	5,000
Recurring :	
Staff and establishment	27,240
Travelling expenses	2,500
Contingencies :	
Cost of materials, etc.	10,000
Incidental expenses	260
Total ..	45,000

(Details have been given in the enclosure.)

Conclusion :—

The scheme is for a very important problem of an all-India character. The United Provinces Government is willing to provide the following facilities as their share of contribution towards the scheme :—

1. The part-time services of the Oil Expert to Government U. P. and Head of the Oil Section of the H. B. Technological Institute, as the Officer in charge of the scheme.
2. Chemicals and ordinary apparatus required for the scheme to an extent of Rs. 2,000 per annum.
3. Laboratory and necessary equipment for the research work to be undertaken at this Institute.

D. Y. ATHAWALE,

for *Principal*,

H. B. Technological Institute,

U. P. Cawnpore.

Enclosure.

Details of non-recurring grant of Rs. 5,000 for the purchase of special apparatus.

	Rs.
Spectograph and its attachments	3,500
Improved type of ghee refining and clarification unit	1,500
Total ..	5,000

Details of the recurring grant of Rs. 40,000 spread over a period of 5 years.

Particulars.	1st year.	2nd year.	3rd year.	4th year.	5th year.	Total.
	Rs.	Rs.	Rs.	Rs.	Rs.	Rs.
1. Officer-in-charge	*Nil*	*Nil*	*Nil*	*Nil*	*Nil*	*Nil*
2. One Research Chemist Rs. 150—10—200.	1,800	1,920	2,040	2,160	2,280	10,200
3. One Assistant Research Chemist at Rs. 100—10—150.	1,200	1,320	1,440	1,560	1,680	7,200
4. One Laboratory Assistant at Rs. 60—5—80.	720	780	840	900	960	4,200
5. One Recorder on Rs. 50—2—60	600	624	648	672	696	3,240
6. Two Laboratory Bearers on Rs. 15—1—20 each.	360	384	408	432	456	2,040
7. One Peon on Rs. 12—1—16 ..	144	156	168	180	192	840
Total *Total Establishment* ..	4,824	5,184	5,544	5,904	6,264	27,720
Travelling Allowance ..	500	500	500	500	500	2,500
Cost of Material and Contingencies.	1,956	1,956	1,956	1,956	1,956	9,780
AND TOTAL ..	7,280	7,640	8,000	8,360	8,720	40,000

D. Y. ATHAWALE,
for *Principal,*
H. B. Technological Institute,
U. P. Cawnpore.

APPENDIX CXI.

Note on Subject No. 47 (a) :—Statement showing the action taken on previous recommendations of the Dairying Committee for information.

Recommendation.	*Action taken.*
(a) Standard forms should be laid down, so as to have a uniform system of recording for dairy herds.	A suitable form of Cattle History and Pedigree Sheet has been devised and supplied to dairies which supply data to the Imperial Council of Agricultural Research.
(b) A standard form should be laid down for the publication of milk records.	A suitable form has been laid down and the first instalment of data published (*vide* Imperial Council of Agricultural Research Miscellaneous Bill. No. 18).
(c) Steps should be taken to standardise dairy products.	Dairy products have been included in the Schedule to the Agricultural Produce (Grading and Marketing) Act and grading stations established for ghee. This matter appears to concern the Marketing staff rather than the Dairy Committee.
(d) Dairy legislation should be undertaken for the prevention of the adulteration of dairy products.	Draft rules have been framed and are under the consideration of the Public Health Commissioner with the Government of India. When ready, they will be put up before the Committee.
(e) Steps should be taken for the manufacture of skimmed milk powder.	The matter has been referred to the Director of Dairy Research for his comments which will, when received, be put up before the Committee.

S. BASU,

Secretary.

NEW DELHI,

The 2nd November 1939.

APPENDIX CXI-A.

Supplementary Note on Item No. 47 (a).

The following comments have been made by the Director of Dairy Research on the recommendation of the Dairying Committee that steps should be taken for the manufacture of skimmed milk powder in India.—

* * * * * * *

"I recommend the taking of steps to manufacture skimmed milk powder both to prevent waste, to replace some imported material and to turn to nutritional advantage skim milk which is now made into a poor grade of lactic casein."

* * * * * * *

"It is suggested that first of all the value of skim milk powder only be investigated in order partly to avoid the large losses of nutritive value of milk in butter and ghee making. The addition of fat in order to make the material of use for infant nutrition can be investigated later, but in this direction it is obvious that the keeping of the original milk fat in the milk, either wholly or in part, is the most economic method.

From inquiries made, there is no skim milk powder manufactured in India. It is suggested that before private individuals will contemplate such a project, a demonstration plant should he set up to show the method of drying and the material obtained.

There are various ways of drying skim milk, such as the roller or drum, spray, belt and dough processes. The easiest process is the roller process, and twin roller plants are available which have a drying capacity upto 270 gallons per hour (giving 270 lbs. of milk powder per hour). It is not possible at the present moment, for obvious reasons, to give an estimate of the cost of such plant. The milk powder made by this process is not completely "soluble" and only 80—85 per cent. will go back into "solution" in water in reconstituting. This is a serious drawback when consumption of the powder as liquid milk again is required. The powder is quite suitable for puddings, confectionery and bread, and, provided the price is favourable, there is no doubt that these forms of foods would consume the major portion of cheap roller powder made. The milk protein and ash would then be working to best advantage in supplementing cereal protein and ash. Texture of confectionery and bread is also improved by milk powder.

The spray method of drying is more costly but gives a powder which is completely soluble on reconstituting. (The costs of production may be gathered from the following prices per cwt. in Great Britain : Roller 23—26|Spray 50—56). The skim milk would have to be condensed to a quarter of its volume (35 per cent. total solids) before spray drying. It is feared that the cost per lb. would be prohibitive in India. I estimate it at 5-6 annas per lb. (Roller dried material at 2-3 annas per lb.). Spray dried material however, could be prepared for a market that could afford higher prices for packed materials.

The dough process is out of date while the belt process has not been tried out sufficiently yet. A modification of the dough process by special treatment of highly vacuum concentrated milk might be investigated.

At present most skim milk in bulk is used for the manufacture of lactic casein, the whey being lost. Casein accounts for a recovery of less than a third of the solids of skim milk. Although war conditions have improved the demand for casein, manufacturers would welcome investigations into the drying of skim milk and its selling possibilities in India."

• • • • • • •

APPENDIX CXII.

Note on Subject No. 47 (b):—Collection of Data Regarding Cattle and Buffaloes in Villages.

Attention is invited to the attached note on the above subect. It is for the consideration of the Board whether the work described therein should be completed.

2. The matter will be considered by the Standing Dairying Committee in the first instance and their recommendations placed before the Board in due course.

COLLECTION OF DATA REGARDING CATTLE AND BUFFALOES IN VILLAGES.

In the course of discussion on the results of Mr. Kartha's investigations relating to the comparative economic efficiency of the different breeds of cattle maintained in the Military Dairy Farms and Farms under the control of the Imperial Dairy Expert, the Standing Dairying Committee at their meeting held in March 1934, recommended that as a further step similar data regarding village cattle and buffaloes should be collected and studied. Accordingly a limited amount of such data was collected and a report thereon was placed before the Committee in July 1935. The Committee considered these data to be of great value and recommended that similar information should be collected from all over India with the help of the livestock and veterinary staff in Provinces and States. This recommendation was circulated to all Provincial Governments and Governments of the Constituent States of the Council. All of them with the exception of Bihar and Orissa promised their co-operation, and over 10,000 copies of the attached questionnaire were distributed with the request that the information may be collected from all over the Province, as and when convenient, through the livestock and veterinary staff in the course of their tours in connection with their normal official duties. The statements were filled up in due course and returned to the Council by the end of 1937.

2. It has not been possible, however, with the available staff in the Animal Husbandry Bureau, to complete the compilation of such a large number of statements each of which contains 20 to 30 items. A general examination has been made and a part of the data compiled. An interim report on the analysis of the data received from the Punjab is under preparation and will be ready for circulation to members at the time of the meeting. It is considered that, if the work is to be completed, it will be necessary to appoint a computor for a period of six months in the first instance on a salary of Rs. 60 per mensem.

3. The advice of the Board is however, sought as to whether it is worthwhile continuing the compilation and analysis. Experience elsewhere, of similar attempts at collection of extensive data through a questionnaire, without special staff specially trained for the purpose, has not been very encouraging, for the reconciliation of discrepancies by correspondence is not practicable, seeing that the statements are so numerous and have been filled up by a large number of individuals. The most that

can be done with the data now available is to reject the doubtful entries and make as best a study as possible of the sifted material. Although the results may lack the precision of a systematically planned enquiry we may hope to obtain information which may be used as a sufficiently reliahle *guide* in a number of problems relating to milk supplies. If found suitable the results may eventually be published as a companion volume to our Village Enquiry Report, the data in which relate to the cows of breeders whereas the data in this enuiry relate to the cows of gwalas.

INVESTIGATION INTO THE COST OF PRODUCTION OF MILK FROM COWS AND BUFFALOES MAINTAINED BY GOWALAS IN VILLAGES AND TOWNS.

(*N.B.*—**A separate form should be used for each Gowala and for each breed of cows and buffaloes.**)

Province/State ....**District** ....**Town/Village**.........Name of Owner.......No. of Cows/Buffaloes maintained......Breed.......

	No. 1.	No. 2.	No. 3.	No. 4.	No. 5.	No. 6*.
1. The yield of milk of each per day. lb.						
2. Stage of lactation at time of enquiry.						
3. The number of months she is expected to remain in milk.						
4. If the animal is pregnant—when she was last served.						
5. The quantity of milk yielded so far.						
6. The quantity she is expected to yield during rest of lactation.						
7. The number of months she is expected to remain dry.						
8. The kind and quantity of concentrates fed per day when in milk.						
9. The kind and quantity of concentrates fed per day when dry.						
10. Quantity of fodder fed per day when there is no grazing.						

*Each column is intended for the entry of particulars of each cow or buffalo in respect of items 1—10.
If any gowala keeps more than six cows or buffaloes, a fresh form should be used in continuation.

11. Rates at which concentrates are purchased (if grown by the farmer, the market price).

12. Cost price of fodder (if purchased, otherwise the prevailing market rate).

13. Paid lablur employed, if any (in terms of wages per day).

14. Labour of family members (in terms of the total number of hours put in).

15. The prevailing rate of wages of unskilled labour per day and the number of working hours per day.

16. Are calves weaned ?

17. Quantity of milk expected to be consumed per day by sucking calf.

18. Quantity of concentrates fed to calves.

19. Quantity of fodder fed to calves.

20. Age at which a heifer first calves.

21. Estimated cost of rearing a calf till first calving.

22. Price at which a young milking bufflo/cow could be purchased, alternatively at what price farmer's milking heifer could be sold.

23. The price at which a young bull or bullock could be purchased or sold.

24. The age at which a male can serve or work.

25. The estimated longevity of a female.

26. Price received per lb. milk—

(a) At the owner's premises.

(b) In the town.

27. Cost of conveyance of milk per *lb.* to the market.

28. The price per *lb. of milk paid by the consumer in town.*

29. If paid on the basis of out-turn of cream—

(*a*) Quantity of milk required to produce a lb. of cream.

(*b*) The price received per lb.of cream.

(*c*) The price received per lb. of separated milk.

30. If milk is turned ino ghee at home—

(*a*) The quantity of milk required to produce a lb. of ghee.

(*b*) The price received per lb. of ghee—

(1) At home.

(2) In the market.

(*c*) Cost of transportation of ghee to market, per lb.

Additional information if any.

Collection of data regarding cattle kept by Gowallas.

Interim report on a preliminary analysis of the data received from the Punjab by K. P. R. Kartha, Technical Assistant, Animal Husbandry Bureau, Imperial Council of Agricultural Research.

Introduction.

The genesis of the enuiry has been explained in the Note circulated on the subject. A copy of the questionnaire employed in the collection of the data has also been circulated. The object of this interim report is to enable the Board to form a general idea of the scope of the enquiry and the nature of the information contained in the replies to the questionnaire.

Data.

For a proper appreciation of the conclusions presented below it is necessary at the outset to explain the manner of collecting the data and the limitations to which they are subject. The data were collected by veterinary and Livestock staff scattered all over the Provinces. Copies of the questionnaires were handed to them with instructions to fill them up in their spare time as and when they were out on tour in connection with their normal official duties. The agency employed was, therefore, varied in kind, and as no money was to be expended there was no preliminary rally of the workers or they were given no practical training, which is necessary to ensure uniformity in the methods of their work. Secondly, it should be remembered that the data are not collected from any systematically kept records but are simply a record or oral statements given by gowallas in reply to the questions put to them orally. Thirdly, though it was stipulated at the time of distributing the questionnaire that the enquiry should not be concentrated in any particular area but should be spread out 'as far as possible' to embrace the whole Province, it is quite likely that the exigencies of their "normal official duties" may not have enabled the local staff in *all* cases to cover the entire Province. The validity of the results is limited by these considerations and they should therefore be taken only as a guide to the general conditions of milk production by gowallas. There are a few items, however, in the enquiry the answers to which can claim a greater degree of precision owing to their not being conjectural or given out from memory. These are, mainly, the number of animals owned by each gowalla, the daily yield of milk of each animal at the time of the enquiry and the quantity of concentrates fed. On the other hand there are certain entries some of which are vague, some absurd and some otherwise unacceptable.* Such cases have been rejected. Any inconsistencies which may be noticed below in the totals relating to individual characters under study are explained by such rejections. No statement has been rejected *in toto*. Thus in one statement the "daily yield" may be acceptable while, say, the stage of lactation or the estimated

*For example : (1) Against stage of lactation at the time of enquiry, some of the typical vague or absurd entries are : (a) Recently calved (b) first stage, second stage, last stage, etc. (c) 5 lbs. or 10 lbs. or 2 lbs., etc. (2) An Animal yielding 12 lbs. daily in the 2nd or 3rd month after calving is shown as yielding 7,000 in a lactation.

lactation yield may be blank or have to be rejected. The totals will not therefore be identical for the three items.

Number of animals maintained.

Statements have been received from 516 gowallas in the Punjab. Two of these relate to large Dairy Farms owning over 500 animals. These being of an entirely different category from the gowallas have been excluded from calculation. Of the remaining 514 statements, 368 are from towns and 146 from villages and they relate respectively to 1,784 and 545 milch animals.

Table I gives a detailed classification of the numbers of animals maintained by each gowalla. It will be seen therefrom that the number of milch animals maintained by each is on the average 4·9 in towns and 3·7 in villages. Large majority are small owners. 67 per cent of the total population in towns and 79 per cent in villages maintain only one to five animals each. It is only very rarely (3 per cent) that a village milk man owns more than 10 animals. In towns the proportion is higher, 7 per cent of them owning over 10 animals.

Some of the gowallas keep cows only, some buffaloes only, while a few who are comparatively large owners keep both cows and buffaloes. Nearly 94 per cent of the people in villages keep only one kind of animal, and the large majority of them, namely 63·7 prefer to keep buffaloes. The average size of the herd is 3·8* among cow keepers and 3·6* among buffalo keepers. The small proportion, 6 per cent which keep both cows and buffaloes have on an average 5 animals each. In the towns, however, larger owners are more numerous. About 15 per cent of them maintain both cows and buffaloes, and their herds also are larger the average being 8·9 animals. Unlike in villages the preference in towns is for the cow, 46 per cent keeping cows and 39 per cent buffaloes. The sizes of the herds are practically the same, being 4·2 and 4·1 animals.

Milking Capacity.

Daily Milk Yield.—Table II presents a picture of the daily milk yields, at the time of enquiry. The yields are classified according to levels of milk production. The town animals do slightly better than their sisters in the villages the averages being as follow :—

	Cows.	Buffaloes.
Average Milk Yield per day in Towns	11·9 lbs.	14·7 lbs.
Average Milk Yield per day in Villages	10·4 lbs.	13·7 lbs.
Average stage of lactation at time of enquiry in months after calving Towns	3·2	4·0
Average stage of lactation at time of enquiry in months after calving Villages	3·6	4·5

Daily yields are an index of milking capacity only when they are viewed in relation to the length of period that has elapsed after calving. These factors are, therefore, presented together in the above statement. It will

*It is interesting to observe, on comparison with the results of Village Enquiry (Miscellaneous Bulletin No. 22 of I. C. A. R.), that farmers' herds are smaller. In Montgomery and Hariana Tracts the average numbers of milch animals maintained per holding are respectively 3·1 and 2·0.

be seen that at the time of enquiry the town animals were generally at an earlier stage of lactation than village animals. The superiority of the town stock is therefore less than that shown by the actual yields.

It will also be noticed that buffaloes are generally better milk producers than cows, but the difference is not so striking as was observed previously in the case of the animals owned by cultivators in the breeding tracts, Montgomery and Rohtak. In the latter, buffaloes were found to yield twice as much as the cows.

The distribution of the levels of milk production is also of interest. Though there may be an occasional prodigy here and there both in villages and towns—and they are comparatively more frequent among buffaloes—the large majority of them yield less than 24 lbs. milk a day. Out of these 60 to 75 per cent are medium animals producing 6 to 18 lbs. outside these limits the low yielders are less frequent aud high yielders more frequent in towns than in villages. This is as should be expected, because low yielders do not pay their feed and keep in the more expensive conditions of the towns.

Stage of lactation.—Detailed figures relating to stage of lactatiou are given in Table III. The averages have been stated in the preceding section. It will be seen from the table that most of the animals in towns aud villages were within six months after calving at the time of enquiry, and a large proportion of them were fresh calvers. 68 per cent of the cows in towns and 60 per cent in villages are under three months, while the proportion of similar buffaloes was 50 per cent in both towns and villages.

Lactation Yield, lactation length and Calving Interval.—Tables IV to VI give the distributions of lactation yields, the lengths of lactation and the intervals between calvings. The yields are figures either estimated by the investigator or given out by the gowalla from memory. The lengths of lactation and intervals between calvings are also from the same source. Allowances will, therefore, have to be made to the figures given in this Section. It is probably safe to assume, however, that the errors are not cumulative—if some statements are exaggerated others may be below the actual—and that they will mutually cancel in the average.

The average milk yields worked out from the statements are as under :—

	Cows.	Buffaloes.
Town	2,784 lbs.	3,787 lbs.
Village	2,300 lbs.	3,856 lbs.

Cows in towns are better than those in villages, while the differences in regard to buffaloes are not large enough to be significant. As will be seen from Table V town cows remain longer in milk than village cows. This accounts for a portion of the difference between their lactation yields. A finer analysis and comparison are not probably justified by the quality of the data.

Looking at the distribution of yields generally it will be found that a large majority of the cows in towns and villages yield between 1,000

and 4,000 lbs. of milk in a lactation, the percentages being 82 in towns and 81 in villages. Of the remaining population, lower yielders are in villages and higher yielders in towns. In the case of buffaloes the usual yields are slightly higher, being between 2,000 and 5,000 lbs., the proportion in towns and villages being respectively 84 per cent and 67 per cent. Low yielding buffaloes are rather rare in towns.

The averages of the calving intervals and the lengths of milking periods are as under :—

		Location length in months.	Calving interval in months.
Cows	Towns	9·2	13·7
	Villages	8·5	13·7
Buffaloes	Towns	10·2	16·0
	Villages	10·2	16·1

These figures correspond to the averages generally obtained in regular dairy farms in India. The cows and buffaloes are dry for four to six months only, which means that a majority of them have been served while they were in milk. This conclusion is inconsistent with the statements often made that breeding bulls are not maintained in towns and that gowallas' cows are not generally served while in milk. Either these data are not reliable or the statements are unfounded. The point requires further investigation. But much greater accuracy cannot be expected until the gowallas have started keeping systematic records. This will be examined later after similar information from all Provinces is compiled.

*Feeding.**

The information available does not permit of a detailed study of the systems of feeding adopted by gowallas. The only point that could be examined for this interim report is the quantity of concentrates fed vis-a-vis the amount of milk obtained. The relevant information on this point has been summarised in Tables VII and VIII. These two tables contain the same information but presented in two different forms to facilitate the examination of the point in question. The average daily yield and the average quantity of concentrates fed are as under :—

	Cows.		Buffaloes.	
	Yield.	Concentrates.	Yield.	Concentrates.
	Lb.	Lb.	Lb.	Lb.
Town	11·9	8·1	14·7	11·6
Village	10·4	5·9	13·7	8·7

*In actual contact with villagers in connection with such investigations it has been observed that there is a lurking fear in the minds of illiterate villagers that such enquiries by Government might lead to additional taxation. Their general anxiety is therefore to make their expenses appear to be more and their income less than the actual. The figures below may be examined against this background.

In the absence of definite information regarding the kind and quantity of fodder available or fed it is difficult to comment on these figures. Assuming that no green fodder is available and that dry fodder is fed ad lib—the maximum of concentrates is fed under these conditions—an average cow (weighing 800 to 1,000 lbs.) yielding 12 lbs. milk a day would require about 7½ lbs. of concentrates, and a buffalo (weighing 1,200 to 1,400 lbs.) yielding 15 lbs. milk would require about 13 lbs. concentrates. But if plenty of green and dry fodders are available, sufficient for maintenance, the requirements would be only 4 lbs. concentrates for cows and 5 or 6 lbs. for buffaloes. As the actual conditions may be anywhere between these two extremes the feeding, judged from the averages, would appear to be sound. But a glance at the details in the tables shows that the averages are entirely misleading and that in many cases the feeding is done in absolute disregard of the requirements as determined by production. A cow yielding scarcely two lbs. milk a day (*vide* Table VII) may get anything between 2 and 12 lbs. of concentrates in the towns or 2 to 8 lbs. in the villages. Taking the most usual class of cows (the class yielding 10 to 12 lbs.) the average quantity fed is 8·2 lbs. in towns and 5·9 lbs. in villages. But the ranges vary between 0 and 14 in towns and 2 and 10 in villages, *i.e.*, some cows get little or nothing at all while others get far too much. In the case of buffaloes a zero is seldom found in the range of the quantities fed, but in their case also an average buffalo yielding 14 to 16 lbs. milk a day may get anything between 4 and 24 lbs. concentrates in towns and 4 and 20 lbs. in villages.

Table VIII is of interest in that it shows the averages and ranges of daily milk yield at different levels of feeding. Even when no concentrate is fed an average of 10·6 lbs. of milk is obtained, the maximum being 16 lbs. milk. There is no increase in milk production commensurate with the increase in the amount of concentrates fed. Between 6 and 14 lbs. of concentrates per day the variation in milk yield is only from 11 to 14 lbs. in town cows and 12 to 16 lbs. in town buffaloes.

Feeding of Calves.—No satisfactory information has been obtained regarding the feeding of calves. The figures are therefore withheld and will be examined further in the main report.

PRICES OF MILK AND GHEE.

Tables IX and X contain classified information regarding the prices of milk and ghee at the owners' premises and in the market. Although there are instances of large differences between the prices in the owners' premises and in the market no such difference is noticeable in the average.

Some of the other items of the questionnaire require a more thorough sifting and a more detailed examination. This and the evaluation of the cost of production of milk will be attempted in the main report.

TABLE I.

THE NUMBER OF ANIMALS MAINTAINED BY EACH GOWALLA.

(Frequency Distribution.)

Frequency in Percentage.

Total No. of animals maintained by each Gowalla.	Towns.				Villages.			
	Cows only.	Buffaloes only.	Cows and Buffaloes.	All* Animals.	Cows only.	Buffaloes only.	Cows and Buffaloes.	All* Animals.
1	11·8	9·8	..	9·2	15·8	28·0	..	22·6
2	14·1	18·2	10·9	15·2	22·7	14·0	33·3	17·8
3	15·3	20·3	3·6	15·5	20·4	9·6	..	12·3
4	20·6	15·4	5·5	16·3	11·4	17·2	22·2	15·8
5	12·3	10·5	7·3	10·9	9·1	11·8	..	10·3
	(74·1)	(74·2)	(27·3)	(67·1)	(79·4)	(80·6)	(55·5)	(78·8)
6	20·0	20·9	18·2	20·1	9·1	14·0	22·2	13·0
7	..	..	7·3	1·1	2·3	..	..	0·7
8	..	1·4	3·6	1·1	2·3	1·1	..	1·35
9	0·6	..	5·5	1·1	2·3	..	11·1	1·35
10	0·6	0·7	12·7	2·5	2·3	..	11·1	1·35
	(21·2)	(23·0)	(47·3)	(25·9)	(18·3)	(15·1)	(44·4)	(17·7)
11	0·6	0·7	1·8	0·8	2·3	1·1	..	1·35
12	3·5	..	5·5	2·4	..	2·1	..	1·35
13	..	0·7	..	0·3	..	..	..	..
14	..	..	..	..	..	..	..	..
15	0·6	..	1·8	0·5	..	..	..	..
16	..	..	..	..	..	..	..	..
17	..	..	3·6	0·5	..	..	..	..
18	..	0·7	5·5	1·1	..	1·1	..	0·7
19	..	..	..	..	..	..	..	..
20	..	..	1·8	0·3	..	..	..	..
21	..	..	3·3	0·5	..	..	..	..
22	..	..	..	..	..	..	..	..
23	..	..	..	..	..	..	..	..
24	..	00·7	1·8	0·5	..	..	..	..
Population of Gowallas in each class.	170	143	55	368	44	93	9	146
Proportion of total in each class in percentage.	46·2	38·9	14·9	100·0	30·1	63·7	6·2	100·0
Average number of animals kept by each Gowalla.	4·2	4·1	8·9	4·9	3·8	3·6	5·0	3·7

*The figures in the preceding columns are analyses of the totals in this into those keeping either or both of the two kinds of milch animals.

TABLE II.

Daily Milk Yield.

(Frequency Distribution.)

Frequency.

Daily milk yield in lbs.	Towns.				Villages.			
	Cows.		Buffaloes.		Cows.		Buffaloes.	
	Number.	Percentage.	Number.	Percentage.	Number.	Percentage.	Number.	Percentage.
0— 2 ..	15		3		12		2	
2— 4 ..	39	11·5	3	4·3	15	29·4	18	14·6
4— 6 ..	46		27		26		20	
6— 8 ..	94		51		18		34	
8—10 ..	118	42·9	85	31·1	31	36·7	31	31·4
10—12 ..	159		102		17		21	
12—14 ..	111		77		10		23	
14—16 ..	129	34·8	122	35·6	25	21·1	27	27·7
16—18 ..	61		74		3		26	
18—20 ..	52		105		9		20	
20—22 ..	16	9·7	32	23·8	..	6·7	8	15·0
22—24 ..	14	..	45		3		13	
24—26 ..	8		12		5		8	
26—28 ..	2		16		3		8	
28—30 ..	..		6		2		9	
30—32 ..	..	1·2	1	5·2	..	6·1	4	11·3
32—34 ..	1		1		..		1	
34—36 ..	..		3		1		1	
38—38 ..	..		..		..		..	
38—40 ..	..		1		..		..	
Total ..	865		766		180		274	
Average yield per day lb.	11·9		14·7		10·4		13·7	
Average stage of lactation (months after calving).	3·2		4·0		3·6		4·5	

TABLE III.

Stages of lactations at the time of enquiry.

Frequency.

Stage of lactation (months after calving).	Town.				Village.			
	Cows.		Buffaloes.		Cows.		Buffaloes.	
	Number.	Percentage.	Number.	Percentage.	Number.	Percentage.	Number.	Percentage.
1	255		160		35		52	
2	139	68·1	92	49·9	36	59·7	34	48·9
3	103		58		24		24	
4	54		73		23		17	
5	39	19·9	60	30·9	11	28·3	15	22·7
6	52		59		11		19	
7	31		29		4		12	
8	24	8·6	42	14·3	7	8·2	19	19·6
9	8		18		2		13	
10	7		14		1		12	
11	4	2·5	7	4·2	2	2·5	6	8·9
12	7		5		1		2	
13	2		..		1		..	
14	3		1		1		..	
15	1		1		..		..	
16	..		..		..		..	
17	..		1		..		..	
18	..	0·9	..	0·7	..	1·3	..	
19	..		..		..		..	
20	..		..		..		..	
21	..		..		..		..	
22	..		..		..		..	
23	..		..		..		..	
24	1		..		..		..	
Total ..	**730**		**621**		**159**		**225**	
Average Stage of Lactation in months.	**3·2**		**4·0**		**3·6**		**4·5**	

TABLE IV.

Estimated Lactation Yield.

(Frequency Distribution.)

Frequency.

Estimated Lactation yield in lbs.	Towns.				Villages.			
	Cows.		Buffaloes.		Cows.		Buffaloes.	
	No.	Percentage.	No.	Percentage.	No.	Percentage.	No.	Percentage.
200–400 ..	5				1		2	
400–600 ..	2				3		1	
600–800 ..	3	3·2			5	13·3	5	5·3
800–1,000 ..	12				10		4	
1,000–1,200 ..	21		3		8		5	
1,200–1,400 ..	32		2		8		2	
1,400–1,600 ..	40	26·1	3	3·9	9	32·2	..	7·6
1,600–1,800 ..	41		7		7		5	
1,800–2,000 ..	44		6		14		5	
2,000–2,200 ..	50		18		4		6	
2,200–2,400 ..	49		16		14		9	
2,400–2,600 ..	51	32·8	27	22·3	8	27·3	9	17·8
2,600–2,800 ..	36		28		10		8	
2,800–3,000 ..	38		31		3		8	
3,000–3,200 ..	36		31		8		10	
3,200–3,400 ..	31		44		8		10	
3,400–3,600 ..	39	23·3	41	35·9	11	21·7	6	24·4
3,600–3,800 ..	27		37		..		14	
3,800–4,000 ..	26		40		4		15	
4,000–4,200 ..	29		37		1		10	
4,200–4,400 ..	18		31		2		14	
4,400–4,600 ..	19	11·7	29	25·7	..	2·8	14	24·4
4,600–4,800 ..	6		20		1		12	
4,800–5,000 ..	8		21		..		5	
5,000–5,200 ..	5		11		..		4	
5,200–5,400 ..	3		11		1		8	
5,400–5,600 ..	..	1·8	5	7·6	..	0·7	4	11·1
5,600–5,800 ..	3		6		..		6	
5,800–6,000 ..	1		8		..		3	
Over 6,000 ..	8	1·2	25	4·6	3	2·1	21	9·3
Total ..	**683**		**538**		**143**		**225**	
Average Lactation yield in lbs.	**2,734**		**3,787**		**2,300**		**3,856**	
Average Lactation length in months (*vide* Table V.) ..	9·2		10·2		8·5		10·2	
Average calving interval in months (*vide* Table VI) ..	**13·7**		**16·0**		**13·7**		**16·1**	

TABLE V.

FREQUENCY DISTRIBUTION OF LACTATION LENGTHS.

Frequency.

Number of months in milk.	Towns.				Villages.			
	Cows.		Buffaloes.		Cows.		Buffaloes.	
	No.	Percentage.	No.	Percentage.	No.	Percentage.	No.	Percentage.
1 ..	..		..		..		..	
2 ..	..		..		..		..	
3 ..	..		..		..		..	
4 ..	1		..		..		..	
5 ..	9	6·1	3	0·9	2	14·0	2	4·0
6 ..	32		2		18		7	
7 ..	99		21		31		18	
8 ..	145	56·5	83	44·1	37	63·6	37	38·2
9 ..	142		133		23		31	
10 ..	111		103		8		33	
11 ..	58	29·0	66	43·3	4	16·8	35	40·44
12 ..	29		64		12		23	
13 ..	19		33		2		12	
14 ..	17	6·0	9	8·9	3	4·2	14	16·9
15 ..	5		6		1		12	
16 ..	7		6		2		1	
17 ..	5	1·9	3	2·4	..	1·4	..	0·44
18 ..	1		4		..		..	
19 ..	2		2		..		..	
20 ..	..	0·4	..	0·4	..		..	
25 ..	1	..	..		..		..	
Total ..	683		538		143		225	
Average Lactation length in months ..	9·2		10·2		8·5		10·2	
Average calving interval in months (*vide* Table VI) ..	13·7		16·0		13·7		16·1	

TABLE VI.

Frequency Distribution of Calving Interval.

Frequency.

Calving interval in months.	Towns.				Villages.			
	Cows.		Buffaloes.		Cows.		Buffaloes.	
	Number.	Percentage.	Number.	Percentage.	Number.	Percentage.	Number.	Percentage.
9	8		1		3		2	
10	43	39·3	3	15·6	11	43·5	5	26·6
11	80		22		19		14	
12	126		57		27		37	
13	106		60		23		35	
14	105	39·3	56	34·2	10	36·2	13	32·1
15	51		66		17		22	
16	35		51		11		11	
17	33	14·4	40	25·8	3	10·9	11	13·3
18	28		46		1		7	
19	21		52		..		5	
20	16	6·1	37	19·4	2	5·1	9	7·8
21	4		14		5		3	
22	4		10		4		6	
23	..	0·6	8	3·9	1	4·3	13	13·3
24	..		3		1		10	
25	..		1		..		11	
26	..	0·3	5	1·1	..		..	
27	2		..		..		..	6·9
28	..		..		..		2	
29	..		..		..		2	
Total ..	667		532		138		218	
Average Calving interval in months.	13·7		16·0		13·7		16·1	
Average Lactation length in months. (*Vide* Table V).	9·2		10·2		8·5		10·2	

TABLE VII.

STATEMENT SHOWING QUANTITY OF CONCENTRATES FED AT DIFFERENT LEVELS OF MILK PRODUCTION.

Quantity of Concentrates Fed per day in lbs.

Daily milk yield in lbs.	Towns.				Villages.			
	Cows.		Buffaloes.		Cows.		Buffaloes.	
	Average.	Range.	Average.	Range.	Average.	Range	Average.	Range.
0–2	8·3	2–12	12·0	10–14	3·5	2–8	1·0	..
2–4	6·7	0–16	9·3	2–16	4·8	2–8	5·2	0–12
4–6	7·7	4–8	9·3	4–16	4·2	0–10	7·3	2–12
6–8	7·1	0–16	8·9	0–16	4·2	0–10	7·0	0–18
8–10	8·3	0–20	10·8	4–22	5·6	0–12	7·5	0–20
10–12	8·2	0–14	10·7	0–22	5·9	2–10	7·2	0–20
12–14	8·6	0–14	12·2	4–22	6·0	0–10	7·4	2–20
14–16	8·4	0–14	12·3	4–24	7·6	2–12	9·1	4–20
16–18	8·0	4–16	12·0	6–22	7·3	6–10	9·2	4–20
18–20	8·5	4–14	12·2	4–24	8·9	8–10	11·9	6–20
20–22	8·6	4–14	12·6	8–24	..	..	10·0	6–16
22–24	9·9	6–14	12·8	6–22	9·3	8–12	9·1	4–16
24–26	8·5	6–12	10·5	4–18	9·6	6–12	11·5	6–16
26–28	10·0	6–14	13·1	8–24	9·3	8–10	12·3	6–20
28–30	..	..	11·7	10–14	11·0	10–12	15·1	12–18
30–32	..	..	10·0	..	..	..	16·5	14·18
32–34	14·0	..	10·0	..	..	..	14·0	..
34–36	..	..	14·7	12–16	12·0	..	22·0	..
36–38	..	..	..	..	..	..	..	..
38–40	..	..	18·0	..	..	..	..	..
Final Average in lbs.—								
Concentrates for	8·1		11·6		5·9		8·7	
Milk	11·9		14·7		10·4		13·7	

TABLE VIII.

STATEMENT SHOWING DAILY MILK YIELD IN RELATION TO CONCENTRATES FED.

Daily Milk Yield in lbs.

Concentrates Fed *in* lbs.	Towns.				Villages.			
	Cows.		Buffaloes.		Cows.		Buffaloes.	
	Avera age.	Range.	Aver-age.	Range.	Aver-age.	Range.	Aver-age.	Range.
0	10·6	2–16	9·0	6–12	7·3	4–14	7·0	6–12
2	4·2	0–10	3·0	..	5·2	0–16	5·7	0–14
4	9·2	0–22	11·6	4–26	7·8	0–16	8·6	2–24
6	11·4	0–28	12·1	4–24	10·8	0–26	14·6	2–28
8	12·6	0–26	13·6	4–28	12·1	0–28	12·7	2–28
10	12·8	2–26	14·0	0–34	15·0	4–30	14·6	4–28
12	13·0	0–26	15·3	0–36	20·0	8–36	10·8	2–30
14	14·0	2–34	16·6	0–30	..	..	21·3	8–34
16	7·9	2–18	16·3	2.36	..	..	20·8	6–32
18	5·0	..	15–5	8–40	..	..	23·4	6–32
20	9·0	..	17·0	16–18	..	..	15·9	8–28
22	..	..	17·1	8–28	..	..	35·0	..
24	..	..	20·5	14–28	..	..	..	..
FINAL AVERAGE.								
Concentrates lbs.	8·1	..	5·9	..	11·6	..	8·7	..
Milk lbs. ..	11·9	..	10·4	..	14·7	..	13·7	..

TABLE IX.

SUMMARY STATEMENT SHOWING THE PRICE OF MILK AT OWNERS' PREMISES AND THE AVERAGE AND RANGE OF PRICE IN MARKET.

Price in pies per lb. of milk at owners' premises.	Average and Range of Price in Market.							
	Cows.				Buffaloes.			
	Towns.		Villages.		Towns.		Villages.	
	Average.	Range.	Average.	Range.	Average.	Range.	Average.	Range.
3·0	6·0	..	..	..	..	..	..	..
3·5	..	..	4·5	..	..	..	..	..
4·0	..	..	..	..	..	..	..	..
4·5	..	..	..	..	..	..	..	..
5·0	..	..	5·0	..	..	..	..	..
5·5	6·0	..	..	..	..	..	..	..
6·0	8·3	6–12	7·9	6·5–9·0	8·8	7–12	7·7	6·9
6·5	9·0	..	7·5	..	..	..	..	..
7·0	9·0	..	9·0	..	..	..	..	..
7·5	7·7	6–12	7·5	..	8·0	6–9	9·0	7·5–11
8·0	9·0	..	8·0	..	10·3	8·5–12	..	..
8·5	9·1	8·5–9·5	..	..	9·3	9–9·5	9·0	..
9·0	9·1	6–12	10·1	6–12	9·5	7·5–12	11·4	9–12
9·5	..	..	..	..	..	..	..	..
10·0	7·0	..	..	..	9·6	9–12	12·0	..
10·5	12·0	..	..	..	12·6	10·5–15	12·0	..
11·0	10·0	9–11	..	..	10·9	9–12	..	..
11·5	..	..	..	..	..	..	..	..
12·0	11·6	6–18	13·3	12–15	11·3	8–18	12·5	9–18
..	..	..	..	..	..	..	..	..
13·5	13·5	..	..	..	..	..	..	..
..	..	..	..	..	..	..	..	..
15·0	15·0	12–18	..	..	15·0	0–18	..	..
..	..	..	..	..	..	..	..	..
16·0	16·5	..	..	..	..	..	..	..
..	..	..	..	..	..	..	..	..
18·0	18·0	..	21·0	..	21·0	..	..	..
..	..	..	..	..	..	..	..	..
19·5	21	..	..	..	..	..	..	..
..	..	..	..	..	..	..	..	..
21·0	..	..	..	..	22·5	21–24	..	..
..	..	..	..	..	..	..	..	..
24·0	30	..	..	..	24·0	..	..	..

FINAL AVERAGE.—

9·8 pies	.. Market	9·7 Market	10·8 Market	10·5 Market
9·5 pies	.. Owner	8·4 Owner	10·7 Owner	8·7 Owner.

TABLE X.

SUMMARY STATEMENT SHOWING THE PRICE OF GHEE AT OWNER'S PREMISES AND THE AVERAGE AND RANGE OF PRICE IN THE MARKET.

Price in annas per lbs. of Ghee at owner's premises.	Market Price.	
	Average.	Range.
6·0	7·0	..
6·5	7·0	..
7·0	7·7	7·0—8·0
7·5	7·9	6·5—8·5
8·0	8·5	7·0—10·0
8·5	9·1	9·0—9·5
9·0	9·6	7·0—10·5
9·5	..	..
10·0	10·0	..
10·5	..	..
11·0	9·6	9·0—11·0
11·5	..	..
12·0	9·0	..
12·5	..	..
13·0	..	..
13·5	..	..
14·0	14·0	..

Final Average.

Owner's Premises .. .. 7·8 annas.

In Market .. .. 8·3 annas.

APPENDIX CXIII.

Note on Subject No. 47 (c) :—Consideration of the problems arising in connection with the Supply of Milk from Villages to Towns.

The question of the supply of milk from villages to towns has come up indirectly for discussion at meetings of the Advisory Board from time to time. They have emphasised the desirability as well as the necessity of villages supplying a larger proportion of the milk required in towns. The practical problems connected with such supply, *e.g.*, the types of organisations which would be suitable in different circumstances, the methods to be employed in collection, handling, processing, transportation and distribution as also the disposal of surplus milk appear to need further consideration.

2. It is accordingly suggested that the Board might consider specifically the following points and make suitable recommendations thereon, with due regard to the difficulties arising from the diversity of local conditions :—

(a) The types of organisations suitable for different conditions with special reference to methods of (i) assembling small owners, (ii) advancing loans to them, where necessary, for purchase of cattle on condition of repayment in easy instalments through milk, (iii) supply of feeds at wholesale rates, the price being deducted from payment for milk.

(b) What type of shed or other structure is required, if any, and how sanitary conditions may be ensured in the milking premises.

(c) Supervision of milking, weighing and recording of milk.

(d) Should the milk be conveyed direct to the distributing centre in the town or is an assembling station necessary and if so what should be its maximum distance from the villages from which the milk is collected and what distance from the town is desirable.

(e) The type of cans and also the mode of conveyance for transport to assembling station. Whether and if so what cooling arrangements are necessary during transit.

(f) Precautions necessary to prevent adulteration before despatch or *en route* to assembling station. The tests that may be carried out to detect any adulteration.

(g) Functions of the assembling station and the equipment necessary thereat. The method of processing if any required there.

(h) The most suitable arrangements for transport from the assembling station to the distributing centre in the town.

(i) Processing, if any, that may be considered necessary before distribution.

(j) The method of distribution and the precautions to be adopted against adulteration.

(k) The best method of disposal of the surplus milk.

(l) The most suitable time for the different operations.

A note (Annexure) by the Director of Dairy Research is attached which may serve as a basis of discussion.

3. The matter will be considered by the Dairying Committee in the first instance and their recommendations placed before the Advisory Board in due course.

ANNEXURE.

NOTE BY THE DIRECTOR OF DAIRY RESEARCH, DATED THE 11TH NOVEMBER 1939.

My experience on the supply of milk to towns from villages is concerned with co-operative methods, the Co-operative Milk Union of Lucknow being a successful example. Here, milk is collected from villages over 20 miles from Lucknow.

The operations have been managed by the Co-operative Department of the United Provinces Government. There is only one fieldman engaged on the milk and ghee work throughout the Provinces.

A group of villages works round one collecting centre. The cattle of the cultivators entering the scheme are collected in the village, milked in sight of a responsible person, and the milk of each participant measured and bulked in 10 seer cans, and padlocked. The milkers are taught to practise the principles of clean milk production in the matter of cleaning of utensils, washing of udders and of the hands.

The milk is transported to the collecting centre by head load or bicycle, the cans opened by a separate set of keys, measured (by volume in seer measures), bulked and flash-pasteurised to 160°F. by immersion of cans in hot water. The milk is transferred hot to the city-distributing centre by lorry.

In the city centre the milk is cooled to about 40°F. on coolers using a small direct expansion cooler. The cooled milk is stored in a cold store and distributed loose.

Fat tests of each village supply of milk are done at the collecting centres and at the city centre. Precautions against adulteration by addition of water are strictly taken throughout.

This method for distant supply works well and appears to be the best method of treatment for milk of this initial hygienic quality. A flash pasteurisation carried out as soon as possible after milking is the only method of ensuring a long keeping quality, which should be the end aimed at in all such supplies. This treatment, on the whole, is not significantly detrimental to nutritive value considering the condition in which milk in India is used for consumption, *viz.*, after being boiled. Cow and buffalo milk are mixed.

Village milk supplies for cities could profitably be organised on the above scheme. The men for development should be co-operative organisers with a knowledge of dairy cattle husbandry, milk production and milk behaviour, such as graduates with an I. D. D. training.

Such schemes alternately need not be on a co-operative basis, but will embrace all the principles of the above, namely, strict checked records of each cultivator's produce, prevention of adulteration and rapid heat treatment after milking.

APPENDIX CXIV.

Note on Subject No. 47 (d) :—The question of the salvage of dry cows in large cities and the economic problems arising therewith.

As the Board is aware, this subject has been discussed previously at a number of its meetings as well as at those of the Animal Husbandry Wing. It has also been the subject of agitation on public platforms, in the press and in the legislatures of India. The matter now rests with the recommendation, adopted by the Animal Husbandry Wing in February 1939, for the appointment of a small expert Committee to re-investigate the question on the spot in the three Presidency Towns in India and if this recommendation is acceptable to the Board it may consider—

(i) how the recommendation should be given effect to, and

(ii) what the terms of reference to the Committee should be.

2. A review of the results of previous discussions and the action taken so far may help the Board in formulating further specific proposals.

(a) *Discussions and recommendations.*—The matter was first investigated by Sir Arthur Olver, who after visiting Calcutta, Madras and Bombay, prepared, in consultation with the Livestock Experts concerned, a note (Annexure I) explaining in detail the position in these cities regarding slaughter of milch cattle. This note was considered by the Animal Husbandry Wing in December 1936, and at their instance by a Special Committee of the Advisory Board in January 1937. The Committee came to the conclusion that a proper control of milk supply to cities was the only permanent solution. They adopted a number of recommendations (Annexure II) to this end. These recommendations were forwarded to the Provincial Governments, but as will be seen from the Summary of replies (Annexure III), for one reason or other, the recommendations have not been given effect to in full. The subject was again considered by the Animal Husbandry Wing in February 1939, on a comprehensive note (Annexure IV) submitted by Mr. Kothavalla, and their recommendation, which is now for the consideration of the Board, is as under :

"After a detailed discussion on the problem of salvage of dry milch cattle from cities, the Committee observed with regret that no effective action had so far been taken on the previous recommendations made by the Committee which dealt with this subject in 1937, and felt that no useful purpose could be served by further reiterations and resolutions along these lines. In view of the urgency and importance of the matter, they considered that a special small Committee of people, closely associated with the subject, should be appointed to investigate the question on the spot at the three Presidency towns and endeavour to elucidate a course of action which would be assented to and co-operated in by the authorities concerned".

(b) *Economics of Salvage operations.*—His Excellency the Viceroy considered this matter of such importance that he personally drew public attention to it by purchasing in November 1936 six dry cows from Calcutta and one buffalo from Bombay City and presented them to Delhi Pinjrapole. While presenting the animals His Excellency appealed to persons of wealth and standing to do likewise. A donation of Rs. 1,000 was received from Bombay, in response to the appeal. Half of this amount was applied for the purchase of buffaloes and the other half for the purchase of cows from Bombay slaughter-house.

The data collected from these salvage operations show that :

(i) Though most of the cows have conceived and given birth to normal calves, their milk yields after salvage are below 1,500 lbs. in a lactation. Figures of their previous performance in city stables are not available, but it is tolerably certain that they yielded much more, else they would not have been a paying proposition in the conditions under which they were kept. Indeed evidence from other sources shows that selected animals purchased from breeding areas and brought on to normal farms yield on an average 2,000 lbs. in the first lactation on the farm and over 3,000 lbs. in subsequent lactations. The salvaged animals can, therefore, be deemed to have definitely deteriorated in milking properties.

(ii) Buffaloes have lost both in milking and breeding values. Though they have conceived, several cases of abortion have occurred. As will be seen from Mr. Bruen's letter No. 6334 of 11th October 1939 (Annexure V), this experience is not peculiar to India. Similar conditions are noticed in places like Germany.

These data indicate that salvage is uneconomic, and would be much more so if the animals had to be transported long distances. It will be remembered that in the early stages of discussions on this subject the proposal was to return these animals to their original homes in the breeding areas, but the figures now available definitely rule out this proposal for the private owner as it is an uneconomic proposition. In short the salvage of dry cows from cities by keeping and breeding from them in rural areas, either in the immediate vicinity of the cities or far away is not a paying proposition.

3. In view of these difficulties it appears to be desirable to make other suitable arrangements for the successful prosecution of the trade. The proposals in Mr. Kothavalla's note (Annexure IV) repeat the assertion that the correct solution is to move *gwalas* out of the cities and settle them in rural areas. Bombay has made a beginning in this direction by the establishment of a Dairy district in Palghar and it is understood that the Madras Government are taking steps to provide areas outside Madras City for the grazing and service of dry cows. Calcutta has not acted on the advice of the Council, and the opinion expressed through their local Committee is against the shifting of milch cattle from the city.

4. It is clear that the problem is a gigantic one and bristles with difficulties. The following figures of provisional estimates received from the Marketing Office indicate the magnitude of the task :—

	Calcutta.	Bombay.	Madras.
Quantity of milk consumed daily Mds.	5,000	4,500	1,750
Approximate proportion produced within corporation %	56	88	86
Number of milch cattle kept in the city (total cows and buffaloes).	22,000	25,000	17,000
Number of milk vendors	Not known ..	1,200 shops and 1,700 hawkers.	2,360 gwallas and 75 retail dairies.

In dealing with such a complicated problem it is essential that the knowledge and experience of persons intimately acquainted with the local conditions should be utilised fully. For this purpose it would appear desirable that the proposed Committee should be as small as possible, as far as personnel from the Centre is concerned, and sufficient only to ensure that all the relevant information is made available to the local officers sitting in each place. Apart from Central officers, a different Committee might be set up in each city with instructions to keep in close touch with local authorities and carry them with the Committee as far as possible, so as to ensure that the recommendations will be given effect to and not shelved.

5. If the conclusion mentioned in paragraph 2 (b) about the salvage of dry cows from cities is accepted, the main questions which the proposed Committee will have to tackle would appear to be as under :

(a) The retention of their dry cows being uneconomic for private owners in large cities, is there any justification for pursuing the matter further ?

(b) If the answer to (a) is in the affirmative, is it desirable for local authorities to make arrangements themselves for the salvage of these cows, and if so, what is the best way of doing it ?

(c) If the local authorities are not prepared to take such action, is it advisable and feasible in view of local conditions, to make arrangements for moving *gwalas* and their cattle outside city limits ?

(d) If the answer to (c) is in the affirmative, what is the best way of giving effect to this recommendation in each of the three cities and what steps should be taken to make milk of good quality available in the cities ?

(e) If the answer to (c) is in the negative, what other action is recommended ?

6. The subject will be considered by the Dairying Committee in the first instance and their recommendations will be placed before the Board in due course.

ANNEXURE I.

SALVAGE OF DRY COWS FROM CITY DAIRYING BY COL. A. OLVER, ANIMAL HUSBANDRY EXPERT, IMPERIAL COUNCIL OF AGRICULTURAL RESEARCH.

The position as regards the salvage of cows in Calcutta City appears to be as follows :—

Roughly there are 9,000 good young cows, mostly Harianas and Sahiwals, slaughtered in Calcutta every year which would be worth salvaging.

They at present fetch Rs. 30—60 and even higher prices from butchers in Calcutta if in good condition. This information was supplied by the Marketing Officer, Mr. Bee, and has been confirmed by the Live Stock Officer, Bengal.

According to the marketing staff the price of a dry Hariana cow in Delhi Province and Rohtak is roughly from Rs. 30—60 ; according to age, its previous milking performance and whether it has been served or not.

Hence a dry cow is worth as much in Calcutta as in Delhi and cows which have been in a city dairy and which if served have probably been mated with a very inferior non-descript bull are not wanted by Hariana breeders. Moreover, Phuka is stated to be very commonly practised in Calcutta and such cows are regarded with suspicion as the practice is considered to render them difficult to breed from or even permanently sterile. As to the truth or otherwise of these allegations I have been able to obtain no reliable information as there is apparently no means of telling if a cow has been phookad or not.

The fact that cows in Calcutta are not usually served while they are in milk also has a tendency to make them difficult to get in calf afterwards and it is considered by the Live Stock Officer, Bengal, that of dry cows purchased from city dairies in Calcutta, roughly 20 per cent would prove to be sterile while on the average the remainder would take 16 months from the time of purchase to produce another calf. If no more than 20 per cent are sterile it seems that the prevalence of phooka or its effects must have been exaggerated, since in any case a certain number of cows would probably be sterile after a lactation period spent in a city under the usual insanitary conditions.

It would thus not be a sound proposition for a businessman to attempt to maintain cows in Calcutta or to transport them as far as Delhi or Rohtak with a view to eventually bringing them back for milk production in Calcutta. Though it might pay a financier or a Government to buy them with a view of thus obtaining good cheap cows for breeding purposes.

In this connection it must not be overlooked that the cost of bringing cows back does not end with the freight charge. In addition the expense per animal is considerable in such matters as fodder, attendance, and all sorts of incidential expenses, *e.g.*, to obviate having them held up at junctions and sidings.

That being the position it appears to me that any action taken to remedy this evil must take the form of doing every thing possible to

develop a milk supply, to all big cities, from outside area where normal dairy farming could be carried on ; the cows being regularly bred from as long as they will breed and the calves reared under normal healthy conditions.

This is being attempted in Bombay by the allotment of an area outside the city, for dairying and fodder production, and something of of the same sort is under consideration by the Live Stock Officer, Bengal, and the Director of Veterinary Services working in collaboration. But before dairy farming can be made to pay, in areas where special fodder crops have to be grown for them, on irrigated land, and the milk sent into a city, it is essential that high yielding dairy cows should be systematically bred and that the dairy farmer shall be protected from unfair competition from city milk vendors who in present circumstances have only to add a little more water to be able to undersell sound milk. however much the cost of production may be reduced.

Effective prevention of the adulteration of milk and dairy products of all kinds in big cities is in fact the crux of the whole matter. Until that is provided for it will be impossible to develop sanitary dairying on modern lines in natural dairy tracts outside big cities.

The necessary laws and regulations exist in most big cities, but owing to the leniency with which they are administered and the inadequacy of the arrangements for inspection and testing of milk and dairy products, they are mostly a dead letter. Pending effective action in this respect all that can be done is to save as many as possible of the good young cows which are at present sold daily in Calcutta for slaughter and some action has already been taken in this direction. For example while in Calcutta I visited the principal Pinjrapoles and was informed that they had made up their minds to work in future on the lines which have been followed in several Pinjrapoles and *Gowshalas* and at the Delhi Pinjrapole for years. The proposal which was referred to in the Viceroy's scheme for Cattle Improvement is to mate all their good cows with good milking type bulls and to carry on systematic milk recording and pedigree registration in connection with the supply of milk and butter to the city, under proper supervision.

Extra land is to be acquired outside the city where fodder crops can be grown and where dry and derelict stock can be cheaply maintained under natural, healthy conditions and already these Calcutta Pinjrapoles have taken up the amendment of their by-laws so that the surplus young stock can be disposed of, for breeding or work under suitable conditions.

Suitable young bulls have already been bought in the Punjab and action is now being taken to build up milking herds by purchasing good young cows in the city which would otherwise be sold to the butcher. These pinjrapoles have a total income of several lakhs of rupees a year and it may be anticipated that they will, every year in future, save a number of good dairy cows from slaughter. In addition they should produce milk and butter under very satisfactory conditions and in time provide pedigree Harians and Sahiwal bulls and heifers for breeding.

Further it is now proposed to supply prison dairies with suitable young cows purchased in Calcutta so that they also can be utilised for the improvement of cattle in the province.

Moreover a scheme is being prepared, by the Director of Agriculture and the Director of Veterinary Services, Bengal, in collaboration, to endeavour to develop a dry stock area in one of the most suitable districts of Bengal, where dry cows could be cheaply maintained under healthy conditions and got in calf again so that they could be sent back to the city for milk production, if desired. The calves and the best of the cows would no doubt be retained in this area and utilized for the improvement of local cattle.

Largely owing to the long time it would take to get city cows in calf again and the number of failures which may be expected, this is not likely to prove a paying undertaking for Government but if properly worked it should prove a cheap way of obtaining good young stock for the improvement of local cattle. Under such a scheme the cost of saving even 1,000 cows a year would, however, be considerable and may be prohibitive.

In addition to the above I have recommended the Bihar and Orissa Governments, and certain Indian States within easy reach of Calcutta, to consider the possibilities of working on similar lines for the improvement of their cattle. To buy equally good foundation cows from the Punjab and land them in Calcutta would cost on an average roughly Rs. 200 each, so it should pay to buy good young cows in Calcutta and breed from them with suitable bulls for the benefit of the cultivators of such provinces or States.

In dealing with this matter a very important consideration which should never be lost sight of is the danger of placing any drastic restriction on the export of cows from their natural breeding areas since it is a very well authenticated fact that, given experienced breeders the greatest possible incentive to improve any kind of livestock is a good market.

The valuable export trade in pedigree cattle, which England has been able to build up and hold for so many years, could never have been developed but for her very remunerative export trade with America and other countries which enabled breeders to breed and feed the best. Moreover, after the Veterinary Department had succeeded about the middle of last century—in stamping out and keeping out of the British Isles all the most important fatal plagues of live-stock, such as Rinderpest and Contagious Pleure *Phenmonia* they were able to carry on their breeding operations from generation to generation without serious risk of loss from disease.

In India the same principles apply, provided that breeders are alive to the necessity of always retaining sufficient of their best strains to maintain the quality of their stock and judging from such figures as I have been able to obtain it appears that this is the case in the Punjab so far.

Such figures as I have of the yields of purchased cows in Punjab markets do not in fact support the statements which are constantly made that their average milk yield is rapidly falling. Thus unless and

until there is well authenticated evidence of this it would be a great mistake to place any difficulties in the way of export of cattle from breeding areas ; as was done in the case of the Ongole and Kankrej breeds with deplorable results.

Since writing the above I have visited Bombay and Madras and the position appears to be as follows :—

In Bombay very few cows are used for milking purposes except a small number maintained by private individuals or for the feeding of children and invalids. I visited the Slaughter-house at Bandra and did not see a single good milch cow offered for sale though there were a number of she-buffaloes, some of which would probably have been worth saving for breeding if better facilities were available. Approximately 44,000 cattle are slaughtered every year in Bombay, but the type of animal slaughtered for meat, is, as a rule, a very poor one which would not be worth retaining for milk production work. I saw large number of them at Bandra and they were all very poor animals the price of which varied between Rs. 15—17 each. But the milk supply of Bombay is almost entirely from buffaloes, and I was informed that, in view of the expense and difficulty of obtaining high-yielding buffaloes, more and more are now being taken back to grazing areas by their owners or dealers who make a business of this. This movement is being assisted in two ways, (1) by a charge of Rs. 15, which is now made on every buffalo slaughtered at Bandra slaughter-house, and (2) by the reduction in railway freight from 4 annas per truck per mile to 3 annas, which is now allowed by the B. B. and C. I., from June until October, for the transportation of dry cow-buffaloes back to breeding areas upto distances of 340 miles. The number of buffaloes slaughtered in Bombay was previously about 26,000 a year, but last year fell to 16,000 and there are records of 8,000 cows having been taken back to breeding areas by rail. This concession seems to be a very useful one and I suggest that still more good cows might be saved if the rate were reduced to 2 annas per truck of dry cows for the journey out from Bombay, but it is of no use to attempt to save cows which are not first class milkers. Since the high cost of maintenance in a city dairy makes any but the best uneconomic. If the Railway consider that they cannot afford such a heavy reduction they might perhaps make a higher charge for the return journey. Owners should not object to paying at a higher rate on a cow in full milk, worth anything from Rs. 200 to Rs. 250, while they might hesitate to pay even 3 annas per mile on a truck load of dry cows not be worth more than Rs. 50 each. The higher cost of freight on cows in milk delivered in a city would tend to increase the difference in their value and that of a dry cow which would be no disadvantage from our point of view.

Whether the charge of Rs. 15 per buffalo slaughtered, against Rs. 1-8-0 per cow or bullock, has much effect it is somewhat difficult to say because it is still possible for owners to walk their buffaloes to slaughter-houses outside the City. This would, however, entail extra trouble and expense and it is doubtful if such good prices would be obtained for slaughter outside the city as in the city abattoir.

As previously mentioned an attempt has been made for years to organise a dairy district at Palghar, about 70 miles outside Bombay,

for the supply of milk to the City, but I ascertained that though this proposal has been under discussion ever since 1928 nothing has so far been settled. Some of the biggest milk producers in Bombay are interested but the competition of the licensed milk vendor, who for a license of 8 annas a year is allowed to sell milk anywhere in the city and the difficulty of getting satisfactory transportation facilities to enable milk to be delivered in Bombay sufficiently early and in good condition makes the development of such an area difficult in present circumstances.

In fact, as in Calcutta, the crux of the whole matter is proper control of the sale of milk and dairy products in the city.

At present all that can be done to a vendor who is caught selling adulterated milk is to order him to appear before a magistrate. In a large number of cases they do not appear and simply leave the district in which they have been operating, or if they appear being regarded as poor men, the fine imposed is so small as to have little or no deterrent effect. The only way of overcoming this difficulty would be to license the producer whose milk is being sold and to hold him responsible for the vendor, who should be his paid servant. If that were done and adequate arrangements made for constant inspection and suitable punishment of offenders it should be possible to enable reputable producers to organise milk production within a reasonable distance of all big cities ; provided that suitable facilities were given for the transportation of milk.

This is I believe the only real solution of this problem of cow slaughter.

In Madras the position is somewhat different but the same principles apply. Most of the milk consumed in the city is obtained from cows considerable numbers of which are maintained in city byres. These are mostly of the Ongole breed and a considerable number of these are now taken back to Nellore for breeding purposes under a concession rate of Rs. 10 per cow. A number are, however, slaughtered in the city for beef and it is probable that more good cows could be saved if better facilities existed for developing dairying within reasonable distances of the city.

Buffaloes are not as a rule used for milk production in Madras, mainly because the local buffalo is a poor dairy animal, but certain organisations such as the Madras Coop. Milk Union obtain high-yielding Murra and other buffaloes from the North and maintain them short distances outside the city. Such buffaloes are very costly in Madras and would not be slaughtered as long as they were useful for milk production.

So long as cows are permitted within city limits another measure which would help to get them back to breeding areas would be to provide good bulls of milch types suitable for mating with such cows. At present all kinds of scrub bulls are allowed to wander the streets and serve cows indiscriminately with the result that the calf is not likely to be of much value. This does not matter much under the present system where the majority of the calves are allowed to die but if encouragement were to be given to city owners to send their cows back to areas where

good cattle are bred it would be necessary to make provision for the cows to be served at the proper time by suitable bulls, so as to shorten the dry period and to provide calves which would be worth rearing. But in any case this would not save calves brought into the city. The majority of these would be allowed to die and for that reason alone every effort ought to be made to remove all commercial dairies from within city limits. They are grossly insanitary and owing to the high rents charged per buffalo they must I think have the effect of interfering with the provision of suitable accommodation for human beings.

For example the rent charged for dairy standings in Bombay City amounts to from Rs. 7 to Rs. 12 per standing per month, whereas outside it would be only Re. 1 or Rs. 2. The charges for food, water and servants are also much higher in the city and it is clear that, but for unfair competition by adulterated products, it should be much cheaper to produce milk, outside and to bring it in daily. Moreover, the daily transportation of large quantities of milk from the mofussil to cities should be an important source of revenue to the railways ; far greater than the transportation of fresh cows or buffaloes once in 9 months. It should therefore pay railways in India to provide facilities for the development of dairy areas outside all big cities, on lines similar to the provision which is now-a-days made by Railway Companies in all progressive countries.

ANNEXURE II.

It was agreed that proper control of the milk supply to cities was the only permanent solution. After discussion it was decided to make the following recommendations :—

(a) Since experience has demonstrated the extreme difficulty of enforcing pure milk regulations against small vendors who cannot be traced even when offences are detected it was recommended that licences to sell milk should only be given to men of substance and hawkers' licences for the sale of milk should be discontinued. For milk contractors the standard should be not less than 200 lbs. of milk a day and for *bona fide* producers 100 lbs. per day. Milk vendors should be required to register their servants and provide them with badges so that they could be held responsible.

(b) All public institutions should place their contracts for milk with organisations which produce their milk outside city limits.

(c) The administration of the Food and Drugs Act needs to be tightened up. It may be advisable, in some cities, to entrust milk adulteration cases to 'special magistrates in order that the trial' of such cases might be expedited. Attention should be drawn to the futility of low fines and to the necessity for increasing the penalties in cases where an offence is repeated.

(d) Railways should give better facilities for the transportation of milk and should provide suitable platforms and sidings

at stations where large quantities of milk are produced outside cities and should give concessional rates to regular consignors for daily consignments of milk, empties and persons accompanying them. Trains with suitable timings should be made available for the transportation of milk to cities and better accommodation provided for milk given in fast trains. Experiments are needed on the problems of long distance transportation but the shorter distances upto 100 miles are the most important.

(e) Municipal bodies should consider the establishment of suitable milk-selling shops within municipal areas and preference should be given to those who produce their milk outside city limits.

(f) The Committee commend to other provinces the measures which are being taken to develop a dairy area at Palghar for the supply of milk to Bombay city.

ANNEXURE III.

SUMMARY OF REPLIES FROM THE VARIOUS PROVINCIAL GOVERNMENTS AND CONSTITUENT STATES TO IMPERIAL COUNCIL OF AGRICULTURAL RESEARCH CIRCULAR LETTER, NO. F. 8-37-VET., DATED THE 5TH MARCH 1937.

With the letter referred to above a copy of the Report of the Special Committee on the Salvage of dry city cows, as approved by the Advisory Board, was forwarded to all the Provincial Governments and Constituent States of the Council, for information and necessary action. The Committee was of the opinion that the problem was essentially an economic one and that proper control of milk supply to cities was the only permanent solution :—

Madras.—Government have given their careful consideration to the recommendation but have come to the conclusion that though the recommendations may be good in themselves they would cause hardship to the poor people who ply the trade of selling milk under great difficulties. In the circumstances Government do not propose to take any action on the recommendations except that relating to the supply of milk to hospitals.

Bombay.—The recommendations have been brought to the notice of all larger Municipalities in the Presidency.

Bengal.—It is considered desirable to examine the problem of the salvage of dry city cows along with the question of the improvement of milk supply in Calcutta. The Corporation of Calcutta have directed the Health Officer to formulate a scheme and have also approved of the appointment of a whole-time Veterinary Officer to collect data and to find out ways and means for the improvement of the livestock and milk supply of Calcutta. The Health Officer is drawing up a scheme and after its completion the question of the appointment of the Veterinary Officer will be taken up. The advice of Mr. MacGregor, Principal, Bengal Veterinary College, will be taken on the technical aspect of the problem.

United Provinces.—The Problem was considered by the Provincial Standing Fodder and Grazing Committee at its meeting held in March

1938. The Committee came to the general conclusion that the problem was essentially an economic one and that proper control of the milk supply to the cities was the only permanent solution. The Provincial Governments are in general agreement with this conclusion. Steps are being taken to organize co-operative societies of milk producers for the supply of milk to cities from rural areas. When these co-operative societies are capable of supplying a substantial portion of the total quantity of milk needed in these cities, it would be possible to adopt measures for the regulation of *gwalas* maintaining their herds within city limits and owners keeping cattle at their houses for their private supply.

A Milk Marketing Union has been established at Lucknow which has organized a large number of co-operative societies of milk producers in the rural areas outside the city. The Union has been now functioning for more than a year and its organization appears to have been firmly established. It is reported to be supplying more than 30 maunds of milk per day to the city.

In view of the success attained at Lucknow, Government have agreed to grant assistance to the United Provinces Co-operative Union for organizing milk supplies on lines similar to those adopted at Lucknow for the cities of Allahabad, Cawnpore, Benares and Fyzabad. Similar organizations will in the course of this year be set up for other big cities of this province.

The Director of Agriculture has been asked to prepare a scheme for the maintenance of pedigreed cows during their 'dry' periods. In this connexion he will have to take the assistance of *goshalas* and also make arrangements for developing fodder reserves. It is, however, felt that it is difficult to tackle the problem from this direction.

Punjab.—Suitable action will be taken on the recommendations of the Committee and the progress effected will be noted every year in the Annual Reports of the Veterinary Department.

Bihar.—Many practical difficulties prevent any action being taken on the recommendations.

Central Provinces and Berar.—No action is considered necessary as the number of cows exported from the Province to the Presidency town or other large cities is negligible.

North-Western and Frontier Provinces.—There are no cattle breeding areas with a definite breed of milch cattle and no action is therefore possible on the recommendations.

Assam.—Conditions prevailing in the Province are different from those obtaining in big cities, such as Bombay and Calcutta. No action is therefore necessary.

Sind.—The question of the salvage of dry city cows is one for the Presidency towns and big cities and not for small villages or towns in Sind. Sind is mainly an agricultural province, where milch cattle, particularly cows and buffaloes, are found in abundance. The problem of supply of good milk which is confronting the Bombay and Bengal Provinces does not arise here to the same extent as abundance of milk is available in all parts of the province. The difficulty is rather one of quality since the adulteration of milk is becoming common even in the smaller

villages. The best method of dealing with this evil will be the extension, in due course, of the provisions of the Bombay Prevention of Adulteration Act II of 1899 to non-Municipal areas in general. As regards slaughter of cattle, the Director of Agriculture, Sind has put forward certain suggestions with a view to checking the indiscriminate slaughter of cattle in Sind. These are as follows :--

(i) Age for slaughter should be fixed at nine years by means of legislation.

(ii) The animals should be examined before being slaughtered to see that they are really unfit for breeding as milch animals,

and (iiii) malpractice like "PHOOKA" should be controlled through the Society of Prevention of Cruelty to Animals which requires to be much strictly administered.

Orissa.—Conditions prevailing in the Province are different from those obtaining in big cities, such as Bombay and Calcutta. No action is therefore necessary.

Kashmir.—The question of salvage of Dry Cows has not arisen in the State so far, as the owners of such sows in the cities generally maintain them in their homes during the dry period or else send them to some village for pasturage. Cow killing is prohibited in the State.

Mysore.—Government is at present considering a scheme for the supply of pure milk to Bangalore city and in that connection there is a recommendation for the organization of farms for the salvage of dry cows. This question has not, however, arisen in Mysore to any appreciable extent, and high yielders among city cows are hardly ever sold for beef when they go dry. The Mysore City Municipality have, however, started a scheme called 'Gokulam Scheme', sanctioned by the Mysore Government. An important feature of the scheme is to offer to owners of cattle in the city and professional milk venders, in particular, facilities to leave their dry or unproductive stock in the Municipal Farm which has an extensive area under grass.

Baroda.—There is a steadily increasing business of exporting dry cows to Mehsana, getting cultivators to look after them till they again come into milk, and paying the cultivators for the work. A scheme is also under consideration whereby, by co-operative agencies, this kind of raising while a buffalo is dry, could be done with better returns to the cultivator than he now gets.

Bhopal.—Conditions prevailing in the State are different from those obtaining in big cities, such as Bombay and Calcutta. No action is therefore necessary.

Travancore.—The problem is not very serious in the State. Hardly anywhere are good young milch cows being slaughtered. Most of the cows in the towns are kept by upper and middle class residents. Even professional cow keepers feed their cows satisfactorily during the dry periods. Wherever the problem of maintaining dry cows in the towns has become difficult, necessary efforts have already been made to secure grazing areas outside town limits. The practice of encouraging the development of dairying industry outside town limits already exists.

Cochin.—The problem does not arise and no action is necessary.

Statement showing the Income and Expenditure of 10 Cows of His Excellency the Viceroy's Scheme, from November 1937 to December 1938.

	Income.				Expenditure.		
	Rs.	A.	P.		Rs.	A.	P.
I. 7,071 seers of milk sold @ Re. 0-4-6 per seer fetched.	1,988	11	6	I. Concentrates @ Re. 0-0-6 per lb.			
				1. As maintenance ..	630	15	0
				2. For milk production ..	254	15	0
II. Present valve of livestock	1,270	0	0	II. Hay grass @ 100 lbs. per rupee.	570	0	0
				III. Supervision charges 10 %	141	11	0
	3,258	11	0				
					1,597	9	6
				IV. Cost of Livestock when purchased.	500	0	0
					2,097	9	6

History of 10 Cows.

1st year—Only 1 cow was in calf when purchased and she calved normally.

2nd year—All the 10 cows were served on the farm and 8 have calved on the farm normally and 2 are carrying.

Statement showing the Income and Expenditure of the 18 Buffaloes of H. E. the Viceroy's Scheme, from May 1937 to December 1938.

	Income.				Expenditure.		
	Rs.	A.	P.		Rs.	A.	P.
I. 12,759 seers of milk sold @ Re. 0-4-6 per seer fetched.	3,588	7	6	I. Concentrates @ Re. 0-0-6 per lb.			
				1. As maintenance ..	2,255	9	0
				2. For milk production ..	445	15	0
II. Present value of Livestock	1,570	0	0	II. Hay grass @ 100 lbs. per rupee.	1,713	0	0
				III. Supervision charges 10%	441	0	0
				IV. Cost of Livestock ..	500	0	0
	5,158	7	6		5,355	8	0

History of 18 Buffaloes.

7 were in calf when purchased, out of which 3 were normal calvings, and 4 were prematured births.

17 were served on this farm, out of which 8 were normal calvings, 4 were prematured births, 5 are pregnant and 1 is not holding.

At present there are 6 cows and 15 buffaloes from that lot on the farm. The others that have been disposed were found to be non-paying. The results are to be seen as yet in case of the buffaloes.

ANNEXURE IV.

THIRD ANIMAL HUSBANDRY WING MEETING, FEBRUARY 1939.

Note on the present position in India with regard to the salvage of dry city cows and supply of milk to large cities. (Subject No. 11 of the Agenda.) By Zal R. Kothavalla, B.Ag., Ani. Hus. (Bom.), B.Sc. Agri. (Edin.), N.D.D. (Scot.), Imperial Dairy Expert, Bangalore.

The subject of salvage of dry cattle from city milch cattle stables has always been before the minds of the people who look at the problem either from the humanitarian point of view, or from the point of view of preserving and developing the indigenous breeds of cattle. Of recent years, the subject first found its place on the agenda of the Second Meeting of the Animal Husbandry Wing of the Board of Agriculture and Animal Husbandry held at Madras in December 1936. It was resolved at that meeting that as the position with regard to this problem was different in each province, a small committee of experts should be appointed, to study the problem very thoroughly and make concrete recommendations. Accordingly a committee of six members was appointed. The first meeting of this committee took place on 26th January 1937, when some more members were also co-opted. The committee after discussing the problem made a number of recommendations which were to be communicated to the Provincial Governments and States for their guidance, although at the time of appointing the small committee the idea was that this committee should visit important centres and after studying the conditions on the spot and collecting information on the subject make concrete proposals for solving this problem.

2. In order to ascertain the extent to which these recommendations were acted upon by the various Provinces and States, the departments concerned were addressed on the matter and up to the time of writing this note, out of 12 inquiries made, replies have been received from 10. The information received indicates that in most of the important cities like Bombay and Calcutta where this problem is most acute, practically very little or nothing has been done *officially* to solve this problem. Madras City appears to be the only place where active steps are being taken by the Veterinary Department to salvage dry cattle from the city stables. These efforts are mainly directed towards providing concessions in railway freight for transporting dry animals back to places where grazing is available (mostly to forest areas and not necessarily to breeding tracts) reserved for the purpose by Government. This experiment is still in its infancy and although the immediate effect of these measures is to cause an increase in the number of dry cows (from 664 in 1937 to 2,287 in 1938) being re-exported from Madras City to grazing areas, it is problematic if this will eventually provided the proper solution. My long experience in this direction has shown that this method has the following disadvantages :—

(a) A very high percentage (ranging up to 75 per cent) of such salvaged animals is rendered useless for further breeding owing to the malpractices—such as ' phooka ', ' ghami ', etc., to which these animals are subjected in city stables.

(b) Even if the salvaged dry animal is capable of breeding, as it is not covered in time it takes a very long time for it to come into calf. Even after calving it turns out a poor milker in

the majority of cases due to the deterioration in its constitution as a result of being kept under unnatural conditions when taken to city stables for a long time.

(c) The cost of transporting these both ways and their maintenance during the dry period (which invariably is very long) amounts to a figure which would enable the gowala to buy a new and better animal from the breeding tracts. Thus it is an uneconomic proposition.

(d) These animals are not wanted back by breeders in the breeding areas, as they swell the number of unprofitable animals and tax the fodder resources and also bring about the deterioration of the breed.

Replies from some of the provincial officers and states on the other hand show that the problem of salvaging dry animals does not arise with them, as due to the favourable situation of the urban areas these areas derive their milk supply either from the surrounding rural areas or from cows maintained in towns for the purpose. These animals are easily returned to the surrounding breeding areas when they go dry. In one or two instances efforts were being made at establishing 'Gokulams', *i.e.*, suitable centres for accommodating gowalas and their cows in the vicinity of cities, so that the producers may not be tempted to keep the animals under unnatural conditions in cities, and thus causing the economic deterioration of the animal. Looking to the urgency of the problem efforts such as are described above do not touch even the fringe of the problem. In the meantime the conditions with regard to the slaughter of prime animals and the supply of milk to urban population continue to be what they were some 25 years back. These conditions were dealt with in great details and various suggestions made for their solution in the note prepared by me for the meeting of the Dry Cattle Salvage Committee held in January 1937, and I herewith reproduce this note (See enclosure No. I) for the benefit of the members of the Board, more especially as this note could not receive full consideration at that meeting due to shortness of time.

3. All are agreed on one point and that is that the slaughter of prime animals from the city stables and the consequent necessity of salvaging them arise out of the existing faulty system of milk supply to our cities—a system which appears to be as primitive as it is uneconomical compared to the methods that are being followed in other civilised cities of the world to-day. The proper solution to this problem therefore lies in the replacement of the present system of milk supply to Indian cities by a more up-to-date, economic and suitable one. This in other words means the gradual replacement of the milk produced in the existing city milch cattle stables by milk produced in areas away from cities and towns where the animals could be fed, housed and bred under natural conditions, and then of transporting this milk under hygienic conditions to urban areas. How this could be achieved forms a problem of the first magnitude which should be studied on the spot. Every important city calls for a solution suitable to its own requirements. My long experience has shown that any legislative enactment by itself to prevent the slaughter of dry animals or to force the milch cattle stables out of urban areas would be of little avail. A more effective way would be to bring economic pressure to bear upon the city gowalas to force them into removing their cattle gradually from the urban areas on the one hand and on the other to offer them

inducement to settle down into suitable places specially selected for the purpose and under the guidance of proper authorities. Such conditions would then be conducive to the production of cheap milk. The note submitted herewith (see enclosure No. 1) offers practical suggestions on the point. Some efforts were made in the past in this direction in some of the provinces, both by the Government and local bodies, but as they were half-hearted and not properly co-ordinated they were not successful. Efforts were also made in various provinces by enterprising public men to establish institutions in rural areas for producing and collecting milk under cheap and hygienic conditions and transporting the same to large cities. Their experience, however, has so far been far from encouraging due mostly to want of protection by the local municipalities against fraudulent dealers. The uneconomic conditions of producing milk under city conditions compels the city gowalas to adulterate the milk with water and the want of proper control and supervision by the municipalities enables the gowala to adulterate this milk up to 50 per cent (cases have been noted up to even 80 per cent.) Thus he is able to undersell the *bona fide* trader and ruin his business. Effective prevention of the adulteration of milk and milk products in large towns and cities—in other words the proper Legislative Control of the Dairy Industry, therefore, forms the crux of the whole matter. Until this is provided for it will be impossible to develop sanitary dairying on modern lines in natural dairy tracts outside big cities nor to arrange for the transport of cheap milk at present produced in abundance in some of the rural areas within reach of large cities. Unless this is brought about, mere salvaging of dry animals would be of little avail and the drain on the cattle resources of the country must continue.

Apart from the effective protection of the *bona fide* traders against fraudulent dealers there are a number of other factors which require immediate attention. They are fully dealt with in the accompanying note (see enclosure No. 1). Any action taken on them will materially help in ameliorating some of the evils associated with the existing system of milk supplies to Indian cities but the eventual solution of the problem must lie in doing everything possible to develop a milk supply to all big cities from areas where milk can be produced economically under natural conditions, the cows being regularly bred from, as long as they can breed and the progeny reared under normal healthy conditions.

4. The present faulty system of milk supply to the cities costs the country as much as over ten lakhs of rupees per annum, in the slaughter of its prime animals—not to speak of the progeny which also gets exterminated. No cost will therefore be too great nor any efforts too much, if the continued drain on the cattle wealth of the country is to be put a stop to as soon as possible. The only effective way in my opinon to solve this problem would be to appoint a small but a strong committee which after a thorough inquiry conducted at a few important centres make concrete proposals which could be put into effect by the Provincial Governments and municipal bodies. The activities of this committee should be given as much publicity as possible to arouse public interest and the interest of those in the trade. so that the committee may be able to take into consideration all the aspects of the problem. before drawing its conclusions.

ENCLOSURE No. I.

Note on the salvage of Milch Animals from city stables, by Zal R. Kothavalla, Esq., B.Ag., Ani. Hus. (Bom.), B.Sc.Agri. (Edin.), N.D.D. (Scot.), Imperial Dairy Expert, Bangalore.

(Note prepared for the Dry Cattle Salvage Committee, January 1937.)

This problem was intimately studied by me while I was working with the Bombay Municipality from 1921 to 1925. I am therefore submitting the notes prepared for the Municipality. which contain facts and figures obtained under my own personal supervision. These notes are submitted as follows :—

Note I.—Note on the economic aspect of the question regarding restrictions on the slaughter of milch animals (January 1925).

Note II.—City milk supply and the slaughter of milch cattle (1924).

Note III.—Note on the Bombay milk supply and its improvement (1922).

Note IV.—Present system of city milk supply and its drawbacks (1924).

Note V.—Statistics of the milk supply of Bombay city (1923).

There has been practically little change in the conditions since the notes were written and although they pertain to the city of Bombay, some of the main features are common to almost all the big cities in India. I am offering further observations in this note on the subject, in the light of experience gained and they are put in the form of suggestions, for the consideration of the committee. Due to shortness of notice the notes had to be drawn up very hurried and some of the points could not be dealt with as fully as I would have liked to. Before going into details I would like to observe that in finding a solution to the problem of Salvage of dry cattle from city stables we shall only be cutting the branch of an evil tree instead of striking it at its very roots. Any measures which could be adopted for the above purpose should therefore be looked upon as merely tentative. *The ultimate solution of this problem lies in shifting the milch cattle stables from the urban areas and replacing the present method or milk supply to cities by milk which would be produced under more natural conditions.* The removal of the cattle stables from the cities and the consequent prevention of the slaughter of prime milch animals *can be brought about more effectively through economic pressure rather than through any legal enactments.* This should be associated with some form of inducement for the city cattle owners to move out. Economic pressure might be brought to bear on the city gowalas by the following measures :—

Suggestion (1).—Adopt measures to bring pressure to bear on the town gowalas.

(i) Increase in Municipal tax and stable license fees.

(ii) Increase in freight in the transport of cattle to cities.

(iii) Increase in slaughter fees of cattle from city stables.

(iv) To provide an incentive for the return of good animals to areas where they can live and thrive under natural conditions the railway freight for dry animals should be effectively reduced.

(v) Introduction of a system of registration of cattle under a scheme such as is suggested in Annexure 1.

Suggestion (2).—Legal prohibition o slaughter of *milch cattle undesirable.*

Any kind of legislation for the controlled slaughter of such animals on the basis of age limits would be like a double edged sword and it is likely to do more harm than good. Especially with the existing religious sentiment it will lead to communal discord.

Suggestion (3).—Introduce milk from rural to urban areas through factory system.

The solution of the problem of supply of milk to towns does not lie in merely starting dairy farms. For cheapness of production the existing milk producing areas should be tapped. This involves the factory system of handling milk in bulk. This can best be worked co-operatively. A practical method of collecting, processing, handling and transporting of such milk is still to be determined and that is what is proposed to be done at the Imperial Research Creamery, Anand. Such a source or sources should supply the main bulk of the milk required in cities.

Suggestion (4).—Colonisation of dairy farmers or small holders in selected areas for absorbing salvaged *cattle.*

The dairy farms can form a ring round large cities where the salvaged animals can be absorbed. Government should provide land and other organised facilities in such areas at concession rates to prospective dairy farmers. Merely handing over of such areas in *raw condition and shifting cattle stables* from the urban areas to this place will be predoomed to failure and will only perpetuate the evils of the existing milch cattle system. The area must be divided into suitable economic units, which should be properly laid out and provided with roads, buildings, water supply, electricity, etc., and let out on hire-purchase system, as is done in Denmark for small holders. This should provide employment for the educated un-employed. Where several of such units are bunched up in a colony a central pasteurising station should be established, if the quantity of milk handled, the distance over which milk has to travel and other conditions warrant. The working of such a colony would be under semi-government control. The best system would be to work it on co-operative basis. Expert technical guidance from Government would be an essential factor for the success of such a colony. While dairying should be the main objective, the income of the small holders can be supplemented by poultry keeping, vegetable and fruit cultivation pig keeping, which form necessary adjunct to a proper system of dairy-farming and for which products there is always a ready market in large towns.

Suggestion (5).—Re-organize and subsidise Pinjrapoles and Gowshalas for absorbing salvaged animals.

Merely salvaging the dry animals from cities and broadcasting them in areas to be reserved for grazing or breeding purposes will not in itself solve the problem. It will only mean accumulation of a large number of useless cattle with which the country is already overburdened. They should be properly bred and handled through the organisation of dairy farms such as are suggested above. Another means of absorption of such cattle would be through the utilisation of the Gowshalas. They existed primarily for the object of providing protection to cows, although laterly they degenerated into asylums for all kinds of

derelict animals. The response obtained since the Imperial Dairy Expert started re-organising the *gowshalas* and *Pinjrapoles* at Delhi, Calcutta, Karachi, Bombay, Cawnpore and other important towns since 1920, has been most encouraging and Bombay in particular provides an example of what could be achieved through the co-operation of such institutions with the local Government. A similarly subsidised scheme could be applied to a few such selected institutions who would help in maintaining the salvaged animals, and it will be one of the cheapest and soundest ways of solving the problem.

Suggestion (6).—*Return of salvaged animals to cities should be prevented.*

One of the factors of prime importance in this connection, however, is that it should not be the aim in salvaging these animals that they should once again be returned to town stables. Otherwise it will only mean the encounragement of the present uneconomic way of milk supply to towns and the perpetuation of the evils associated with it. The animals salvaged must remain in the areas provided for them and they should eventually become the milk producing sources of the future.

In salvaging the animals from city stables the following facts are to be borne in mind :—

(i) A high percentage of them are rendered useless for further breeding by mal-practices like " phuka " and by fatty degeneration which sets in due to unnatural life in city stables, want of exercise, feeding of highly nitrogeous food, etc. It was once estimated that this class of animals ranged up to about 75 per cent.

(ii) A large number while bearing calves becomes uneconomical due to prolonged dry period after removal from stables, short lactation period and the small quantity of milk they yield. It was ascertained that such animals take from two to three years to revert to their normal life after being taken to breeding areas.

(iii) A fair percentage of them have passed their economic life and would be fit for slaughter-house only.

Suggestion (7).—*Adopt measures to ensure salvaging of profitable animals.*

The measures which could be adopted to counteract such evils would be :—

(i) The compulsory maintenance of bulls in every stable and giving service in time.

(ii) Adoption of special legal measures against " phuka " system or any other mal-practice, with heavy penalty, including imprisonment.

(iii) Regulated import and export of milch cattle in urban areas under a system of registration and their controlled slaughter.

(iv) Salvage of young calves before they are tortured and made to die a lingering death. The prospects of preventing the extermination of animals of high milk strains are more promising through the preservation of the calves than through the salvaging of milch animals, as long as the present system of milk supply prevails.

Suggestion (8).—No restriction to be put on the export of cattle from breeding areas.

Any restriction on or interference in the export of cattle from the breeding areas to other parts of the country will only add to the difficulties of the cattle breeder who already finds it difficult to eke out an economic living from his business. It will only tend to accelerate the process of extermination of certain important milch breeds which is brought about by the city milch cattle stables.

Suggestion (9)—Adopt measures for the better protection of bona fide dairymen.

The success of any measure whether it be the salvage of milch animals, or starting of dairy farms or organising the transport of milk from milk producing districts to urban areas, intended for the ultimate solution of the present acute problem of the supply of adequate, cheap, pure and clean milk to large towns, will depend on the extent to which protection is given to *bona fide* trader against the existing gross adulteration of milk and milk products. Legal enactment for the protection of the dairy industry is the crux of the whole thing. This would involve :—

- (i) A suitable Dairy Act for the whole country with suitable standards for various milk products, the conditions of production, etc.
- (ii) A complete over-hauling of the present system of supervision and control of milk supply by municipalities.
- (iii) Adequate and properly qualified staff for the enforcement of any laws and bye-laws which might be enacted.
- (iv) Establishment of well organised agencies for the transport and distribution of milk, which could be easily controlled and supervised in place of the existing method of distribution through hawkers, vendors, etc., which is out of date and most uneconomical.

Unless the numberless streamlets through which the Indian cities draw their milk supply are replaced by a limited number of properly organised and well diverted channels for the flow of milk like what are possessed by other cities of the world, the task of control and supervision of the milk supply of a city by the Municipality will always remain a difficult and doubtful one, with consequent deleterious effect on the dairy trade as a whole.

Suggestion (10).—Adopt measures to ensure reasonable price for milk.

During the period of transition from the old to any new system of milk supply and before the latter is thoroughly established, a rise in milk prices is bound to take place and this the consumer should be prepared to face provided he is assured of a better quality milk supply. But this phase can to a certain extent be mitigated and the process hastened by the Municipality adopting measures such as :—

- (i) Meeting any increase in the price above what might be considered reasonable or normal if milk were to be brought through an organised system into city areas from outlying areas, by providing a subsidy for every pound of milk supplied.
- (ii) The findings of the sub-committees of the Milk Legislation Committee appointed by the I. C. A. R. to be taken into

consideration and acted upon by the Municipality even if an all-India Dairy Legislation was not possible.

(iii) Provision of suitable buildings for receiving and distributing milk entering into the city.

(iv) Elimination of the unprofessional milk-men and milk vendors from the trade by encouraging organised efforts at the collection, handling and distribution of milk in cities not amounting to giving a monopoly to certain institutions or bodies. This will considerably facilitate the work of control and supervision by the Municipalities.

(v) Intensive propaganda for the education of both the producer and the consumer.

(vi) Provision of trains with proper timings to suit the suburban milk producers to bring their milk into town.

(vii) Providing specially equipped milk stalls in Municipal markets which could be rented out to approved traders.

(viii) Giving concessions in water-supply, electricity, etc.

(ix) Giving contracts to hospitals and other institutions controlled by the Municipalities to organised traders.

Suggestion (11).—Measures for immediate adoption in the *salvaging of* dry cows.

As far as the immediate question of salvage of dry cows from city stables is concerned, the following measures would appear to be effective :—

(i) Increase in train fares for the importation of milch animals into towns to discourage this system and an effective decrease in the return fares to provide an incentive to take the animals to breeding areas when dry.

(ii) Introduction of a system of registration of milch cows brought to towns and the effective control of the slaughter of such animals through such a system.

(iii) Compulsory maintenance of bulls in stables to provide service to mlich animals at the right time. to maintain their breeding capabilities. Registration of such services.

(iv) Punishment for " phuka " and other pernicious practices should be legalised and it should be of a drastic nature even up to imprisonment. Similarly any cruelty practised on calves should be punishable by law..

(v) Buying over of the calves from stables and their rearing in rural areas through co-operative breeding societies.

(vi) Appointment of a special officer and adequate staff for salvaging the useful dry animals and their distribution to suitable areas.

(vii) Working out of a scheme for the absorption of such animals in rural areas through the agency of dairy farms to be started on the lines suggested in the note and through the agencies of the gowshalas or Pinjrapoles which should be subsidised for the purpose.

(viii) Providing better accommodation and more convenient train service for the transport of milk to towns from outlying areas.

In the end I would suggest that the only effective method of providing a practical solution of the various complicated problems associated with this question of premature slaughter of prime milch animals, would be to *study conditions on the spot.* As such the committee as a body should visit three of the principal cities in India, investigate the many drawbacks of the present system of milk supply, collect evidence of all concerned and give as much publicity as possible to this inquiry with a view to arouse the interest of the public at large—the producers, consumers and the capitalists, as also of the municipalities and to enlist their sympathy and support.

Suggestion (12).—Visit of the committee to three principal cities after giving due publicity.

ZAL R. KOTHAVALLA,
Imperial Dairy Expert.

NOTE I.

BOMBAY MUNICIPALITY.

Note on the economic aspect of the question regarding restrictions on the slaughter of milch animals.

The 20th January 1925.

(*Note by* Mr. Zal R. Kothavalla, Dairy Expert, Bombay Municipality.)

" The slaughter of milch animals has a direct bearing on the milk problem of the Bombay City and if it is desired that the citizens of Bombay should get clean, pure and cheap milk, the prevention of slaughter of useful animals brought to Bombay for the purpose of milk production should take some useful and practical shape.

1. *Present System.*—At present, as a rule, milch animals brought to Bombay, when they run dry, are sold to the butchers by the gowlis. Want of space as well as the high cost of feeding make it prohibitive for the gowlis to maintain them during the dry period. Usually when the milk of an animal falls below six seers a day it is found uneconomical to maintain it. Economic considerations also come in the way of rearing the young or maintaining them with their mothers for any length of time. The young either die premature or are sold for slaughter to the butcher when of sufficient size. Thus along with the good animals their progeny is also lost. The animals that are imported in Bombay for the milk trade are in almost all cases in the very prime of life, as nothing but heavy milkers would prove economical under the present costly system of keeping them in the City. The wanton destruction of useful animals has been going on for years and is on the increase. Figures of the buffaloes slaughtered at the Bandra Municipal slaughter house annually show a rise from 8,371 in 1915 to 11,536 in 1922. The same is true of the neighbouring slaughter house at Kurla. The buffaloes slaughtered at the two slaughter-houses are mostly supplied from the City milch-cattle stables.

2. *Economic Effects.*—This unrestricted destruction of prime animals brought to Bombay for the purpose of milk production together with the destruction of their progeny which leaves no chance for the good animals being replaced in the breeding areas has led to the drainage of the best breeds in the Bombay Presidency, and its effects are even felt in Northern India, whence the Delhi buffalo is imported in fairly large num-

bers for the Bombay milch-cattle stables. Consequently good animals *are becoming and have become scarce, with the result that* prices of animals brought to Bombay for milk production have risen about 100 per cent during the period of the last few years. All this has had a direct economic bearing on the trade of milk and its products in Bombay as explained below :—

(i) Milk.—The dearness of cattle is to a large extent contributory to the increased price of milk sold in Bombay, because :—

(a) The initial capital invested in the purchase of the animal is higher.

(b) *The depreciation in the value of the* animal has increased, as the price fetched by the animal when dry has not increased in the same proportion as the increase in the initial cost of the animal.

(c) The poor quality of animals now obtainable in spite of the high price, increases the milk production cost due to poor yield of milk.

(ii) *Butter.*—Butter in Bombay is mostly manufactured from cream imported into Bombay from the mofussil. With the growing scarcity of *good cattle both outside and in the Presidency, any surplus milk left* with the cultivators for being converted into cream for export has disappeared ; the price of cream has, therefore, gone up high and this is reflected in the price of fresh butter sold in Bombay. To keep down this increased price the manufacturers resort to adulterating it with vegetable oils, etc., so that the butter available in the Bombay market is seldom genuine and scarcely wholesome.

(iii) *Ghee.*—This article of food which is consumed in such large quantities both by the vegetarians and non-vegetarians is also entirely *imported in Bombay from the* mofussil and it has increased in price due to reasons explained in (ii).

3. *Municipal Legislation for the prohibition of the slaughter of cows and buffaloes* :—

(a) The Corporation by its Resolution No. 5614, dated the 17th September 1920, and Resolution No. 11840, dated the 3rd March 1921, prohibited the slaughter of male cattle under three years of age and cows and buffaloes in calf. The effects of these resolutions were more harmful than helpful to the cause of prevention of slaughter of useful cattle. For by *putting a stop to young and weedy* animals under four years coming to the Bandra slaughter house from the outlying districts, increased demand for the more useful animals was created. Owing to this measure the very best prime animals which come to Bombay stables are slaughtered. It is characteristic of Indian cattle to mature late. Under natural conditions it is seldom that a buffalo would bear its first calf before three years. Usually it is after the 4th or 5th year that an animal comes in calf for the first time. On an average a buffalo will calve at least 6 to 8 times and till her 7th calving it could be said that she proves an economic milk producer from a dairy man's point of view. That means that up to the age of 12 to 14 years (average life 20 years) she remains a useful animal. What economic loss is incurred every year may be judged by the fact that all milch animals above the age of 4 years are allowed to be slaughtered at present.

(b) The Corporation by its Resolution No. 4282 of 16th September 1923, prohibited the slaughter of all cows and she-buffaloes under 8 years of age. The object underlying the above resolution was apparently to a great extent an economic one. It was thought that by the prevention of slaughter of *all* animals under the age of 8 years the agricultural live-stock of the country would be increased resulting in an increased and cheaper supply of milk, butter and other milk products. This belief is, however, based on a fallacy. All animals below the age of 8 years which are being slaughtered at present at the Bandra slaughter house are not all useful animals and excepting the dry animals from the Bombay City stables, and which indeed in most cases are very useful animals, the remaining ones are abandoned as worthless by the agriculturist, milk producers and others and these are brought by butchers from the districts for being slaughtered. The preservation of the latter class of animals raises two serious economic considerations. Firstly, the perpetuation of such useless animals will be a serious objection, from the cattle breeders' point of view, to the active improvement of the indigenous breeds. It may even become a menace to the existence of the few good breeds of animals that we have still left with us. From the economic uplift of the country eradication of the useless animals is as important as the systematic breeding of good animals, and if constant weeding out of the useless ones and their disposal through the slaughter house, which is the only economic method of disposing them, is prevented by legislation of the kind that is contemplated, the country which is already burdened, more than any other country in the world, with useless and unproductive animals will further be over-burdened with them. The result will be that during famine years, which are unfortunately not infrequent in this country, there will be scarcity of fodder, and a struggle for existence, between scrub type and the pure breed will ensue in, which according to the cruel law of nature, the former will be victorious over the purer and more delicate breed. Secondly, the prohibition of the slaughter of *all* animals below the age of 8 years may give rise to problems as regards the food supply of the non-vegetarian section of the country.

4. *Proposed Measures.*—Faced as we are with the peculiar conditions under which milch cattle are kept in the very heart of the city for milk production, protection is needed to prevent indiscriminate slaughter of useful animals brought to Bombay. The ideal solution of the problem of course lies in the wholesale removal of milch cattle, from the city and to replace the present method of milk supply by a supply from dairy farms or milch cattle centres far away from the urban areas under some such schemes as are at present engaging the attention of the Corporation. With the best of speed and the best of intentions, however, it is not anticipated that the last stable in the city will disappear before a number of years yet. It is, therefore, necessary in the meantime to devise ways and means of meeting the problem of *saving the useful animals without preventing the slaughter of useless animals.* With this end in view, the last resolution passed by the Corporation should be so modified as to make it applicable only to milch animals brought to the city stables and not indiscriminately to *all* animals slaughtered at the slaughter houses. Further, to make the measure efficacious as far as the saving of prime and useful animals is concerned, the age limit should be raised from eight to twelve years. To give effect to the suggested measure it will be necessary to maintain

a record of all animals imported into Bombay, and it is not anticipated that there will be any difficulty in doing this as there are only one or two places at which animals are detrained when brought into Bombay from upcountry. Before the animals are allowed to enter municipal limits, they should be examined and registered with such particulars as age, number of calving, names of importer and purchaser, etc., and a register number given to each animal which can be marked on the ear of the animal. This number will serve as a check when animals are taken for slaughter to the municipal slaughter houses. A nominal fee of Re. 1 can be charged per animal imported into Bombay which besides meeting the expenditure which will have to be incurred for extra staff, may also bring in some revenue to the Municipality without taxing the trade unreasonably. The animals saved under the proposed legislation will be returned to the breeding districts where they could be kept till their next lactation. It may be argued that useful cattle thus saved from the Bandra Municipal slaughter house would be absorbed by the slaughter-house at Kurla over which the Bombay Municipality has no control. But the cattle slaughtered at Kurla are slaughtered only for their hides, as there is no market there for meat, and the number of cattle slaughtered is always governed directly by the trade demand for hides. The number of animals slaughtered in Kurla will not, therefore, it is anticipated, exceed a certain limit.

5. *Dry Cattle from City Stables.*—Some explanation may here be given as regards the dry animals saved from Bombay stables. It may be said, and it has been said, that they cannot breed any more because (i) the food given in the city stables is too rich in nitrogenous matter and on account of want of exercise fatty degeneration sets in and the animal is incapable of further breeding, and (ii) the pernicious "phuka" method practised by the gowlis in avoiding the animal while in heat to be covered in order that the animal may continue in milk as long as possible, incapacitates the animal from bearing calf again. While there is some truth in (i) it does not in itself form any unsurmountable difficulty. On the other hand, it has been ascertained that if the animal is served in right time instead of waiting till it gets dry, it bears calf like any other animal in spite of the rich food it gets. And this is being done at present by the city gowlis in the case of exceptionally good animals. As for (ii) if the gowli is forced to find some other market than that afforded by the slaughter-house he will automatically be driven to abandon the present pernicious practice and resort to the timely covering of the animal if he wants a customer for his dry animal, who must of necessity be a cattle breeder. This demand for pregnant animals from cattle breeders will also counteract the demand from Kurla or other slaughter-houses outside the control of the Bombay Municipality.

6. *Advantages.*—The measures suggested by me will remove the legal difficulty that may perhaps arise in connection with the prohibition of the slaughter of all animals under a certain age and will mitigate the serious economic evils that must follow from the cutting off of the food supply of a large section of the non-vegetarian population of the city. It will further, directly or indirectly, offer inducements to the gowlis to keep their animals in the suburbs instead of in the city as at present and thus help in removing one of the great prolems facing us both as regards sanitation and the supply of pure milk."

NOTE II.

City Milk Supply and the slaughter of milch cattle (Zal R. Kothavalla, B.Ag., B.Sc., N.D.D., Dairy Expert, Bombay Municipality), 1924.

One of the most unsatisfactory features of the milk supply of cities in India is that the major portion of the supply is obtained from cattle stabled in the very heart of the cities. Taking the example of Bombay, nearly 78 per cent of the total milk consumed is produced by about 15,000 head of cattle stabled in the city itself. This system apparently dates back to the time when there were no railway facilities and land in urban areas was cheap. The only merit contained in this system is that the milk is produced just near the place of its consumption and can be supplied fresh without raising any problems of transportation, but this is many times outweighed by the dangers which attend its production in a crowded city by methods which are very primitive. There is further the great danger to the health of the inhabitants on account of the proximity of the stables. Besides these objections from the point of sanitation, certain economic factors have arisen of recent years which make clean and cheap production of milk in urban areas economically impossible. The first step, therefore, in the improvement of the milk supply of any Indian city is the removal of the stables from the town and the supply of milk from rural areas. Production on dairy farm should be the ultimate goal. But during the several years that must elapse between the substitution of a city supply by a country supply certain important economic problems arise which must be solved. Of these, the two most important are :—

(1) The slaughter of milch animals brought to city stables for milk production ; and

(2) the supervision of the milk supplied from the suburbs.

As regards the first, the slaughter of prime animals, it is not anticipated that the last stable in the city will disappear before a score of years yet. Till then the wanton destruction of useful animals will continue as at present if not checked. This practice, which exists to a fearful extent in Bombay, has not only drained the Bombay Presidency alone of its best breeds, but its effects are felt even in North India whence the Delhi buffalo is imported in fairly large numbers for the Bombay milch cattle stables. Figures of the buffaloes slaughtered at the Bandra municipal slaughter-house annually show a rise from *8,371 in 1915 to 11,536 in 1922* ; this gives a vivid idea of the annual destruction of the precious animals and emphasizes the necessity of devising some measures.

The Bombay Municipality recently made a move in the matter by adopting a resolution for the prevention of the slaughter of all animals under the age of 8 years at the municipal slaughter-houses. This measure though full of good intentions will work to certain grave disadvantages in practice as far as the agriculturist is concerned, for the only venue of the disposing of the weedy and useless animals will be closed. At the same time some such measure as would save the useful animals without preventing the slaughter of useless animals is urgently necessary. With this end in view the measure requires, in my opinion to be so modified as to make it applicable only to milch animals brought to the city stables and not to all animals in general slaughtered at the slaughter-houses.

Comments on this are invited. The proposal can be given effect to by maintaining a register of all animals imported into Bombay, in which age will be the determining factor. The animals so registered, if they are below the age limit, should be prohibited from being slaughtered at slaughter-houses when they run dry. The adoption of some such measure appears to me to be the only remedy within the powers of the Municipality for the evil under the present circumstances. As for the animals thus saved, if proper inducements were offered by providing facilities for land by Government, not far away from the city, they could be kept till their next lactation either by individuals or through the efforts of limited concerns. Here a remark is necessary as to the experience in the past with these dry animals. It has been said they cannot breed any more and the reasons advanced are :—(i) That the food given in city stables is too rich in nitrogenous matter and on account of want of exercise fatty degeneration sets in and the animal is incapable of further breeding. (ii) The pernicious "phuka" method practised by the *gowlis* in avoiding to cover the animal while in heat, incapacitates the animal from bearing calf again.

While there is truth in the first statement it does not in itself form any unsurmountable difficulty. On the other hand, it has been ascertained that if the animal is served in right time instead of waiting till it gets dry, it bears calf like any other animal in spite of the rich food it gets. And this is being done in the case of exceptionally good animals by the city *gowlis*. If any doubt is still felt about it the Local Government cattle experts should take up this question and thoroughly investigate it.

As for the second reason, if the *gowli* is forced to dispose of his animal when dry in any other way than to sell it to the butcher, by adopting some such measure as suggested above, he will undoubtedly be forced to abandon the present pernicious practice if he wants a customer for his dry animals, which must of necessity be a cattle breeder.

This question is brought before the Conference in view of the fact that the prohibition of the slaughter of the cattle is being decided upon by most of the principal municipalities in this country. At some places only a partial probihition is carried out, while at places where religious sentiment is running high, total prohibition is advocated. The result of such a policy would be disastrous as far as the agriculture of the country is concerned and would prove ruinous to any scheme for the improvement of the cattle. The Conference, therefore, after debating on the question, should make its recommendations to the municipalities concerned and insist on co-operation from Government on the following points :—

(1) The inadvisability of the total prohibition of the slaughter of the cattle in municipal slaughter-houses as detrimental to the agricultural interests of the country.

(2) The desirability of protecting useful milch animals brought to the cities by some such methods as suggested above.

(3) The desirability of substituting the present method of milk supply from cattle stabled in the city by a supply of milk produced on dairy farms in the country.

(4) The grant of conveniently situated land by Government at concession rates for the purpose of maintaining dry animals obtained from city stables.

(5) The grant of concessions by railways for the transport of dry animals from the city to the breeding grounds.

(6) Introduction of stud bulls by Government in the city stables.

As regards the supervision of milk supplied from the suburbs, this factor is more important from the point of health of the community than from any economic consideration. Mere removal of the cattle from the city to the suburbs or to any place beyond the municipal limits will not solve the problem of a cleaner and cheaper milk supply for the city. On the contrary, were the animals to be shifted to places where the municipality has no jurisdictive powers or where there is no organized system of supervision the milk imported into the city from such places will always be attended with grave dangers so that the remedy may prove worse than the disease, even if powers were obtained by the municipality by legislative enactments to control and supervise the areas round about which form the milk supplying sources of the city, due to the present unorganized state of the milk trade and the great number of herds in which the milch animals will be scattered. Supervision over the production by a single municipality will prove very difficult and expensive if not impossible. Production on dairy farms started for the purpose would be ideal and the only possible solution of the problem, but before this stage of perfection is reached measures such as would ensure a safe milk supply from the suburbs through efficient supervision are very necessary and discussion on this subject is invited. This is my opinion, could best be achieved through the co-operation of the local bodies and the municipalities lying within a certain radius of the city to which the milk from those areas is supplied. This system can be given effect to be adopting a uniform and common standard of laws and bye-laws as regards the stabling of animals, sanitation, etc., so that when a permit for selling milk in the city is applied for by a producer his ability to produce safe milk could be attested to by the local municipality the Government must co-operate by taking up the responsibility and even extending the services of its inspectorial staff to the local municipalities whose revenue does not permit of adequate staff being kept for efficient control.

The advantage from such a control to the city will be that the public will be assured of a safe milk supply, while the local municipalities or the controlling bodies will gain by increased revenue obtained through the fees for stabling of animals within their jurisdiction.

NOTE III.

Notes on Bombay milk supply and its improvement (1922) by Zal R. Kothavalla, Dairy Expert, Bom. Municipality : Wm. Smith, Imperial Dairy Expert, Kasauli.

It is generally admitted that the present conditions of the milk supply of the City of Bombay are unsatisfactory. The quality of the milk sold is generally bad, adulteration is the rule rather than the exception, prices are high and the milk offered for sale to the general public is far from safe from a sanitary point of view.

This condition of affairs is due to various causes the principal one being ignorance on the part, firstly of those engaged in the dairy industry, and secondly of the consumers, the general public. In other words the force of public opinion in Bombay up to now has not been sufficient to demand and secure a more satisfactory milk supply.

The milk supply of Bombay at this moment differs from that of all the great cities of Europe, America, and the colonies in that it is produced entirely within the city area or immediately adjacent thereto. In fact the milk supply of Bombay is now produced in the same manner as and under somewhat similar conditions to that of London, Paris and New York prior to the introduction of Railways and the commercial application of cold storage machinery. The advent of railways and the application of cold producing machines to the dairy trade very quickly stopped the production of milk in cities or suburban residential areas close to large towns. The milk supply of all the great cities of the world to-day outside of India is now produced by dairy farmers on purely rural areas, and after proper treatment to ensure its keeping properties, is railed into the cities and distributed from depots properly equipped and organised for the purpose. In no large city of the world which we know of was this change brought about by any legal enactments such as the prohibition of housing of cows within city limits or such like but the economic laws which govern the production and distribution of all products closed up the city cow shed with extraordinary rapidity, in that it is a self-evident fact that to feed, milk and look after a cow in the heart of a great city must be a very much more expensive business than to support the same animal under natural conditions on the land where the food is grown.

It should, however, be mentioned here that in all the large world cities the advance of public opinion in regard to sanitation was the means of hastening the elimination of the urban cow shed because improved sanitary conditions of life demanded more expensive cattle sheds and a higher and a more costly standard of cleanliness, ventilation, and general well-being for the city kept now. This is exactly what is taking place in Bombay to-day.

Public opinion is clamouring for the removal of the existing cattle sheds from the congested districts of Bombay to Trombay or elsewhere. although this move may be and probably is urgently requisite and necessary from a sanitary point of view, we most strongly hold that it will not solve the milk supply problem of Bombay. On the contrary as more rigid sanitary conditions are enforced and public opinion will see that they are enforced the cost of the city of suburban produced milk will continue to increase and in Bombay the point in production cost is not far distant when the price will be so high that the man in the street will not be able to buy milk at all. Anything therefore in the direction of the removal of the existing city cow sheds to other urban or suburban sites is no solution of the problem. It can and must be solved in Bombay, as it has been done in Paris, Berlin, Copenhagen, Chicago, London and New York, and every other large city outside of India by the introduction of a country milk supply produced from cattle fed, housed and milked in rural areas on the land where the fodder is grown and the dairy farmer is forced by economic conditions to keep his cow from year to year and to produce a calf from her year by year so long as she remains fit. The economic conditions governing the existing Bombay system force the cow

feeder (he is *only a cow feeder and not a dairy farmer*) to slaughter the animal after one lactation period.

It is unfortunate that the Indian business man in the past has persisted on looking upon anything in connection with cow keeping as something concerning his religious sentiments rather than a business propositiou, and it is largely because of this that private enterprise has not tackled the dairy industry in India and eliminated the town cow-feeder. We must however face things as they are and the task now before the Corporation of Bombay is to introduce into the city a supply of pure safe pasteurised new milk which will sell at a lower price than city-produced milk can possibly be offered at, and which will eventually take the place entirely of the existing unclean supply.

There are several ways in which this could be done. The Corporation should take the initiative and start a large dairy farm of their own. They could subsidise all sound rural supplies brought into the city. They could subsidise the railway companies to carry such supplies at very low rates, or they could grant free sites, rebates of Municipal taxes, or other such facilities for the town distributing depots of rural milk companies.

After a full consideration, however, of the whole matter we are of opinion that the best and quickest result in the direction of effecting a real and permanent improvement of the city milk could be obtained by the Corporation guaranteeing for a period of say ten years interest at the rate of 5½ per cent per annum on the capital of approved limited liability companies formed to produce milk at model dairy farms with sufficient lands, buildings and equipment and to supply the same to the city of Bombay. The Government of India successfully adopted this method in their endeavour to introduce capitalists to lay down railways in India and thereby develop the internal transport of the country.

The conditions under which a guarantee on the above lines could be given may be as follows :—

(1) Corporation to guarantee interest on capital of approved companies at the rate 5½ per cent per annum for ten years.

(2) Approved company to mean a limited liability company registered in India. The scheme for the promotion, working and location of such company to be drawn up in each case by the Imperial Dairy Expert and the Milk Officer of the Bombay Corporation conjointly.

(3) Plans of all dairy buildings, machinery specifications and schedule of live-stock of all approved companies to be drawn up by the Imperial Dairy Expert and the Milk Officer, Bombay Corporation and no concern to be considered, an approved company which does not comply with the requirements of these officers in connection with these items.

(4) The Bombay Corporation through their technical advisers the Imperial Dairy Expert and the Milk Officer, Bombay Corporation to approve of all managers or managing directors appointed by approved companies and no firm to be considered as an approved company unless the management is approved of by these officers on behalf of the Bombay Corporation.

(5) Each approved company to guarantee to supply to the city of Bombay not less than 500 lbs. of pure fresh pasteurised milk daily for every Rs. 1,00,000 of capital guaranteed by the Corporation. This supply

to commence within one year from the date of approval of the company by the Corporation.

Since our interview with the Municipal Commissioner we have been in communication with two groups of Bombay financiers concerning the capitalisation of such companies and we consider it probable that if the Corporation could agree to these conditions both these companies would materialise. One would operate near Talegaon and the other near Bulsar stations. The proposed capital for each would be Rs. 10,00,000 which would mean minimum supply of 10,000 lbs. new milk per day to Bombay. Should the Bombay Corporation favourably consider the proposal we can proceed with the detailed scheme for each of these companies. These detailed schemes would in addition to building plans, machinery specification, lists of live-stock, etc., include estimated trading accounts for the first, second, third and fifth years working and it is not unlikely that the Corporation would like to have those details before them before they finally commit themselves to the guarantee recommended.

It is our opinion that if these approved companies have sufficient lands, the proper class of animal and good management they cannot fail to be dividend earners. We don't think in pledging their credit in this way, to encourage the dairy industry in Bombay, the Corporation will ever be called upon to pay any interest whatever, provided the Corporation see that the approved companies have not to meet unfair competition (*i.e.*) that persons who sell a mixture of half water for new milk, are not permitted to compete in price with the approved companies selling pure milk. This the Corporation can do under their existing powers.

WILLIAM SMITH,
Imperial Dairy Expert.
ZAL R. KOTHAVALLA,
Dairy Expert,
Bombay Corporation.

NOTE IV.

Present system of city milk supply and its drawbacks. (*Zal R. Kothavalla, B.Ag., B.Sc., N.D.D., Dairy Expert, Bombay Municipality*).

(Paper prepared for the Cattle Conference held in January 1924.)

The problem of the milk supply in Bombay city is a most pressing one to-day, and I feel it might interest the members of the Board to know something of the difficulties which have to be contended with and the measures that are being taken to contend with those difficulties.

The problem is not of course confined to Bombay ; it is common all over the country. It is vast and intricate and the efforts of one or more individuals or of a city or Corporation, will not go very far. The problem must be tackled as a national problem. In Bombay city with a population of 11,75,914 the total quantity of milk consumed per day amounts to 23,000 gallons. That means that the *per capita* consumption amounts to 3·1 oz. This figure as compared with the *per capita* consumption in U. S. A., which amounts to 20 oz., and in the United Kingdom, which amounts to 10 oz., is very low. With its large vegetarian population, Bombay ought to consume more and it shows that if more milk were procurable more would

be consumed. The supply is smaller than the demand and the present unsatisfactory and dear milk supply is the result. Of the total quantity of the milk consumed daily, 18,000 gallons, *i.e.*, 78 per cent are produced within the city itself. To produce this quantity in all about 15,000 head of cattle are stabled in the very heart of the city. Of the remaining quantity, 4,855 gallons, *i.e.*, 21 per cent are brought by rail from the suburbs and beyond, while the remaining 142 gallons, *i.e.*, 1 per cent. are brought to Bombay from outlying places by road.

The distribution of all this milk is being done either by the producers themselves or by retailing at milk shops and through city dairies. Of the last, it is very disappointing to find that there are only two or three which are worked on up-to-date principles of business and sanitation. The distribution of milk in the city leaves much to be desired. Little or no attention is paid to cleanliness in handling, while the method of transportation is crude and imperfect and the risk of contamination during transit is very great.

As regards control and inspection of the city's milk supply, it is unfortunate that I cannot deal with this part of the subject as fully as I would like to. Strange as it would appear, the supervision of the city's milk supply forms part of the duties of Assistant Health-Officers in charge of the different wards. The city can boast of a splendid set of milk ordinances, but they are like arms lyings useless without any soldiers to use them. Till 1922 there were only 5 Sub-inspectors to look after the milk supply of the entire city. These men, in addition to inspecting milk while in transport through the agency of about 5,000 milk vendors and a large number of milk shops and taking test samples for examination, had also to issue of summons and attend Courts. The effect of inadequate staff and the consequent inefficient supervision was reflected in the quality of the milk sold, In 1921 about 989 milk samples were examined. Of these 650, *i.e.*, 65 per cent. were of adulterated milk. The amount of water added varied from 15 per cent to 86 per cent. From the middle of last year, the work of taking samples was assigned to the Medical Inspectors in addition to the Milk Sub-inspectors. The number of samples taken every day increased from about 4 to 29. In 1922-23 the number of samples analysed amounted to 2,866. Of these, 1,760, *i.e.*, 61·4 per cent. showed adulteration. Up to June 1923, 2,464 samples were analysed. Of these 42·1 per cent. were of adulterated milk. It will thus be seen that since the inspectorial staff was supplemented and more rigid steps taken to inspect milk, the percentage of adulterated samples that were detected decreased from 65 per cent. to 42 per cent.

The responsibility of the supervision of the milk supply and the licensing of the trade is not only divided amongst several executive officers, but it is even divided between two departments. The fearful child mortality of Bombay is as eloquent testimony to the imperfect method of production, distribution and supervision of the city's milk supply. It has now been definitely proved by the experience gained in some of the principal cities in U. S. A., that the milk supply has a direct bearing on child mortality. The price at which milk is sold in Bombay is 13 times dearer than in U. S. A. and 12 times dearer than in the United Kingdom. This high price of milk is due partly to the demand being greater than the supply but principally to the production of 78 per cent. of the milk in the very heart of the city where conditions are anything but favourable

for cheap production. Another very undesirable result of this system of stabling milch cattle in the heart of the city is the slaughter of prime animals brought to Bombay for the purpose of milk production. No fewer than 11,536 buffaloes were slaughtered at the municipal slaughter house in 1921-22, while at Kurla, a suburb near Bombay, almost a similar number was slaughtered. All animals come from the Bombay milch cattle stables and in most cases they are in the prime of life having been imported with the 2nd or 3rd calf. This unrestricted destruction of really useful animals that has been going on for so many years is causing a serious drain on the economic resources of the country of which the effects cannot but be felt. It is here that Government can be of great help by devising ways and means to meet this situation. The Bombay Municipality has already decided to put a stop to the slaughter of all the animals below the age of 8 years, with a view to save the wanton destruction of milch cattle coming to Bombay. But if this measure is not to result in harm in another direction, it should be confined only to the milch cattle imported for the city stables.

This state of affairs is not by any means one of which any municipality or executive body could feel proud, but it brings forth clearly both the importance and the extent of the problem to be solved. Not only is the trade required to be rebuilt on sound principles of business and sanitation, but before this can be done the deep-rooted evils established by ignorant and unqualified producers are to be eradicated first. The Municipality was alive to the situation and its first efforts to bring about an improvement can be traced as far back as 1912. It was not, however, till the year 1915, that some results of these efforts were visible. In this year the Milk Committee appointed by the Corporation approached Dr. H. H. Mann to advise them in the matter. The Committee could not have selected a better man for the purpose. At that time Dr. Mann after studying the whole situation carefully, submitted in 1919 an interesting report over which he devoted considerable energy and labour. One direct and immediate result of the report was that the Corporation decided that no more milch cattle stables should be allowed to be erected in the city, and that on sanitary grounds the existing stables should gradually be removed to a suitable place outside the city, where the cattle should be housed in up-to-date stables with clean surroundings. It was also realised that for the purpose of reorganising the milk supply and devising ways and means to improve it, it was essential that there should be a whole-time officer. This brought about my appointment in April 1922.

As a first step toward reorganizing the supply of milk from the suburbs, the Municipality decided to build a set of model stables at Trombay about 12 miles from Bombay. The Development Department, which has undertaken the development of Trombay has earmarked an area of about 350 acres for milch cattle stables, of which 40 acres are being acquired immediately. To begin with, it is proposed to construct a yard of four stables to accommodate 500 cattle with necessary buildings and the provision for paddocks for exercise and open ground for the grazing of the cattle. These stalls will be let out to *gowlis*, and in the case of owners of a large number of cattle, the Municipality may allow the owners to construct stables at their expense according to sanctioned plans on land leased from the area reserved by the Municipality. The Municipality will be responsible for water supply and sanitary services and it is hoped that a supply of electricity will be available also. With all these facilities and clean stables con-

structed on the most up-to-date principles the milk will be produced under almost ideal conditions. As regards the transport of the milk from Trombay to Bombay, there is a fine road connecting the two places and the Municipality will provide the necessary vehicles. Later, it is expected that there will be a direct connection by railways of which a beginning has already been made. In the light of experience gained, further stables will be erected at Trombay.

The Trombay scheme, while forming the basis of a suburban milk supply, cannot by itself solve the whole problem, unless it was supplemented by some other scheme to meet the enormous demand that will be created by the removal of cattle stables from the city. In the circumstances at present existing there was no private enterprise forthcoming to start a dairy farm unless some help was guaranteed by the Municipality. The only alternative to this was the starting of a dairy farm by the Municipality itself. As regards the former, a private limited company proposes to start dairy farms at two places, one at Telegaon on the G. I. P. Railway and the other at Bulsar on B., B. and C. I. Railway. All the milk produced at these places would be sold in Bombay through the Company's agency. The company is prepared to grant the Municipality the right of inspection of the farm and the accounts and to take such measures as would ensure proper management of the concern. In return, the company has asked that a dividend of 5½ per cent per annum should be guaranteed to the shareholders for ten years, the Municipality to make up the deficit in case the profits of the company do not allow the payment of this dividend. The advantage of a private enterprise, even under these terms, to a municipal enterprise which has nowhere succeeded, are obvious. Both the proposals are at present under the consideration of the Municipality. I should not fail to refer here to the invaluable assistance received from Mr. W. Smith, Imperial Dairy Expert, both in connection with this scheme and the general policy to be adopted.

Even after the establishment of a suburban milk supply certain measures will be quite necessary as regards the inspection and control of the milk, after it enters the city, to ensure a clean supply to the public. Unless there is proper and efficient supervision, the traders in unadulterated milk will have no chance against those who adulterate their milk with water. It is necessary to emphasize this point very strongly otherwise all the grandiose schemes for clean and cheap milk supply would come to nothing.

In the first place the present system of inspection needs complete over-hauling. The prime factors in efficient control and supervision are the centralisation of the administrative powers and an adequate and well-trained staff. These have been urged upon by all the Milk Commissions investigating the problem in various parts of the country, and wherever they have adopted a clean and safe milk supply to the public has been assured. The division of responsibility between more than one department and between different executives and the secondary importance given to milk inspection work where this forms part of the other duties of an official, has to a great extent been responsible for the present deplorable state of affairs. If any headway is to be made in the direction of improving the milk supply, it is in my opinion necessary to have a separate milk department, where all work in connection with the inspection, supervision, etc., of the milk supply could be centralized.

Before concluding I should like to refer here to public apathy in this matter ; whatever be the magnitude of a scheme involving the welfare of the public, progress with it is difficult, if not impossible, if there is no intelligent appreciation by the public of the measures undertaken. In order that the progress of the measures in contemplation by the Municipality may be expedited, co-operation from the public was sought for by making proposals which were conducive to a cleaner and cheaper milk supply. But neither an appeal to the religious sentiments of the people nor to the profits involved in the enterprises had any effect.

The whole situation has been and is under careful consideration, I must admit that very little progress has so far taken place and there is hardly any tangible result to which I can point with pride. But you will agree that progress must of necessity be very slow where a public body like Municipal Corporation is concerned, where the problem is so vast and intricate, where the evils connected with the problem have been deep-rooted for so many years and where we have to deal with a class of people of so backward a type as the *gowlis*. Fortunately there is at the head of the Health Department and also at the head of the Corporation, officers who are keenly interested in this particular problem and they are doing all they can towards its solution.

NOTE V.

The Statistics of the milk supply of Bombay City, 1923, by Zal R. Kothavalla, Dairy Expert, Bombay Municipality.

In 1915 Dr. H. H. Mann worked out the statistics of the milk-supply of Bombay city, when he had been asked by the Municipality to examine the milk problem and make his recommendations for an improvement.

In June of this year a systematic survey was made of the city's milk-supply and the following reliable figures will prove of considerable interest both to the general public and to those engaged in the study of the milk-problem in this country.

The total quantity of milk that is being consumed per day in Bombay amounts to 22,997 gallons, *i.e.*, 229,970 lbs. As the population of Bombay according to the last census was 11,75,914, the consumption of milk per head works out to 3·1 oz. This, as will be admitted, is not what it should be, especially in a country like India where milk forms one of the principal articles of diet both of the rich and the poor.

Out of the total quantity, 18,000 gallons of milk, *i.e.*, 78 per cent. are produced within the municipal limits in the town-stables. Of the remaining quantity 4,855 gallons, *i.e.*, 21 per cent. are brought by rail from the suburbs and beyond. The farthest place from which milk is brought by rail is Kirkee on the G. I. P. railway and Nadiad on the B., B. and C. I. Railway. The remaining 142 gallons, *i.e.*, 1 per cent. are brought to Bombay from the suburbs by road.

There are in all 93 milk cattle stables in Bombay City and these contain in all about 15,000 head of cattle. Of this number about 95 per cent. are milch buffaloes and the rest are cows.

The above figures do not compare favourably with those obtained by Dr. Mann in 1916. It was then estimated that about 20,000 milch animals

were stabled in the City. Out of the total supply of milk 83 per cent was produced in the town-stables while 17 per cent was brought from outside. The total quantity of milk consumed per day in the city was estimated to be 30,000 gallons in view of the fact that the population then was smaller than what it is at present the consumption of milk per head was higher than that of today.

This state of affairs is of course due to the rise in the cost of food stuffs which leave a poor margin of profit to the cattle-owner. The increased railway freights have not only added to the cost of milk transport but also have added to initial cost of the animal, and with the prevailing lack of funds all round, inferior types of animals are now being purchased. The high rent of city stables ranging from Rs. 3|8 to Rs. 8 per month per head, the slaughter of prime animals after they run dry and the destruction of the calves of class animals stabled in the city, are other factors which have tended to accentuate the difficulty.

ANNEXURE V.

COPY OF LETTER No. 1334 OF 1939, DATED THE 11TH OCTOBER, 1939, FROM THE LIVESOCK EXPERT TO GOVERNMENT, BOMBAY PROVINCE, POONA, TO THE ANIMAL HUSBANDRY COMMISSIONER, IMPERIAL COUNCIL OF AGRICULTURAL RESEARCH, SECRETARIAT, NEW DELHI.

I have the honour to forward herewith a statement of income and expenditure of the 10 cows and 18 buffaloes purchased by donation made to His Excellency the Viceroy and passed on to me for the purchase of dry stock leaving city stables.

2. I would invite your attention to the statement about the premature births. On my tours I have found from many case of buffaloes purchased after leaving the cattle stables in Bombay as either aborted or given births *to premature calves. This is, in my opinion, not due solely to phooka, but* is more attributed to the methods of feeding and housing of cattle in large cities. Why I say this, is from my experience in the cattle stables in Berlin, on my visit to the International Dairy Congress ; the trouble is precisely the same there. Cows purchased in the country and brought to Berlin could never be got into calf once they went dry. Consequently these animals were kept in milk for an extraordinary long time, in some cases over three years. In the beginning when the cattle were kept in Berlin, they were unable to sell them to farmers ; after a year or two the farmers would not accept them even as free gifts, as they found that they either would not take the bull or have premature births. In Berlin fat stock happens to be very valuable and the dairies were not put to any great loss. But in India, we have stock or little or no value, and the loss is very high.

3. May I suggest that the I. C. A. R. take up this investigation to ascertain what actually happens to those cattle that have once been in large cities ? Do they come into calf, do they abort, do they have premature births ? I have not the staff in my Section to be able to investigate this thoroughly, but there is no doubt in my mind that over 65 per cent of the buffaloes, once they sit any length of time in a city, are of no value whatsoever as breeders afterwards.

4. There is only one solution to this problem of cow and buffalo keeping for milk production and that is that the keeping of these animals in large cities should be prohibited, and a Dairy District started where the cattle could live under natural conditions.

COPY OF LETTER No. 89, DATED THE 10TH OCTOBER 1939, FROM THE MANAGER, BOMBAY GOWRAKSHAK MANDALI, KANDIVALI CATTLE BREEDING FARM, TO THE SECRETARY, IMPERIAL COUNCIL OF AGRICULTURAL RESEARCH, NEW DELHI.

I have the honour to submit herewith the statement showing the income and the expenditure of the cows and the buffaloes, of H. E. the Viceroy's scheme (salvage of dry cows and the buffaloes from the slaughter house), as required by Mr. K. P. R. Kartha, when he had been to this farm on his official tour.

L22ICAR—300—22-10-40—GIPS